Construction Specifications

1. Mound construction procedures are just as important as the mound design. Good design with poor construction will result in the mound operating poorly and may result in failure. Proper equipment is essential. Small track type excavators work best. Wheel type tractors are too difficult to maneuver in the fill. The following is a step–by–step procedure for mound construction, which has been tried and proven. Other techniques could be used as long as the basic principles of mound design, operation, and construction are not violated.

2. Submit a representative sample (enough to fill a 5 gallon bucket) of mound sand from the intended source for testing according to ASTM D 422 (Knight Consulting Engineers, Phelps Engineering, Otter Creek Engineering, and Vermont Testing can all perform this test). Submit a copy of the results to the designer prior to initiating construction.

3. Stake out the mound on this site so that the trenches or bed run perpendicular to the direction of the slope. Reference stakes are recommended in case corner stakes are disturbed. LaRose Surveys, P.C., must stakeout or verify this task.

4. Stake out corners of the bed and determine the bottom elevation of the bed.

5. Determine where the force main from the pump chamber connects to the distribution system in the mound.

6. Trench and lay the force main from the pump chamber to the mound. Lay the pipe 5' below the ground surface for frost protection. Where there is less than 5' of cover, insulate with 2" of rigid polystyrene insulation 4' wide (2' either side of pipe, placed in two 1" layers with staggered joints). Cut and cap the pipe 1' beneath the ground surface. Backfill and compact soil around pipe to prevent back seepage of effluent along pipe. This step must be done before plowing to avoid compacting and disturbance of surface.

7. Install the curtain drain (if shown on plans).

8. Check the moisture content of the soil at 7" – 8" deep. If it is too wet, smearing and compaction will result, thus reducing the infiltration capacity of the soil. Soil moisture can be determined by rolling a soil sample between the hands. If it rolls into a ribbon, the site is too wet to prepare. If it crumbles, soil preparation can proceed.

9. Cut trees to ground level. Remove excess vegetation by mowing. Do not remove stumps. Prepare the site by using a moldboard plow to create 8" – 10" deep furrows perpendicular to the slope. Furrows must be thrown up hill. Chisel plowing may be used if a moldboard plow is not available. Rototilling must not be done on heavy soils but can be used on non–structural soil such as sands. Alternatively, plowing can be done by using an excavator bucket to pull the soil into furrows parallel with the ground contours (the resulting surface must look as though it had been plowed with a moldboard plow, as outlined above). Immediate construction after plowing is necessary. Avoid rutting of plowed area with vehicular traffic. Designer Inspection required at this point.

10. Extend the effluent pipe to several feet above the ground surface.

11. Place the approved fill material around the edge of the plowed area. Keep wheels of truck off plowed areas. Minimize traffic on the downslope side of the mound. Work from the end and upslope side.

12. Move the fill material into place using a small track type tractor with a blade. Always keep a minimum of 6 inches of sand beneath tracks to prevent compaction of the natural soil.

13. Place the fill material to the required depth, which is the top of the trenches or bed. Shape sides to the desired slope. Inspection required at this point.

14. With the blade of the tractor form the bed or trenches. Hand level the bottom of the bed. Make sure bottom is at the same elevation and level.

15. Place the coarse aggregate in the trenches or bed. It should be 3/4" to 1½", washed, durable aggregate (i.e. not limestone or marble). Level aggregate to the design depth.

16. Place the distribution system on the aggregate. Connect the manifold to the force main from the pump chamber or siphon chamber. Slope manifold slightly toward distribution laterals. Lay laterals level, removing rises and dips. Place orifices upwards. Inspection required at this point (to observe discharge rate and pressure testing).

17. Place shields on orifices and properly cement all components. Place 2" of aggregate over the distribution pipe.

18. Place a synthetic non–woven filter fabric (Mirafi 140N or equivalent) over the entire stone bed. Overlap joints by 12" minimum. Place an 8' x 8' mat of rigid polystyrene insulation, 2" thick, centered over force main riser. Place insulation in two layers (1" each) and stagger the joint pattern.

19. Place soil on top of the bed or trench to a depth of 1' in center and 6" at outer edge of bed or trenches. This may be a subsoil or topsoil.

20. Place 6" of good quality topsoil over the entire mound surface. This will raise the elevation at the center of the mound to a minimum of 1.5' and the outside edges of bed or trenches 1'. Inspection required at this point.

21. Landscape the mound by planting grass, using the best vegetation adaptable to the area. A mixture of 90% birdsfoot treefoil and 10% timothy may be desirable if the mound is not manicured. If manicuring is desired, a combination of 60% bluegrass, 30 % creeping red fescue and 10% annual rye grass may be the desired vegetative cover. Shrubs can be planted around the base and up the sideslopes. They should be somewhat moisture tolerant since the toe of the mound may be somewhat moist during various times of the year. Keep all trees and shrubs away from the top of the mound, as root systems can destroy the distribution network.

22. Mound maintenance involves pumping the septic tank and pump chamber every 1 to 3 years to avoid carryover of solids into the mound. A good water conservation plan within the house assures that the mound will not be overloaded. Avoid excess traffic on the mound area. Winter traffic on mound should be avoided to minimize frost penetration. Inspect pump chamber and septic tank each year to determine the level of sludge accumulation. Mow twice a year.

23. Utilities information shown on this plan was obtained from available sources and may or may not be either accurate or complete. The contractors shall verify exact location of existing utilities and shall be responsible for any damage to any utility, public or private, shown or not shown on this plan.

24. All fill around the structures shall be placed in 12" lifts and thoroughly compacted to 95% of maximum density at optimum moisture content.

25. This design must be inspected by LaRose Surveys, P.C., Bristol, Vermont, to ensure compliance with these plans. LaRose Surveys, P.C., waives any and all responsibility and liability for problems that arise from failure to follow specifications, and the design intent that the plans convey, and from failure to have been notified by the contractor for inspections.

Operation & Maintenance Recommendations

1. The septic tank's purpose is to settle out solids, contain the scum and pass treated effluent. Bacteria within the septic tank helps decompose the solids. Should any solids pass through the septic tank into the system, premature clogging of the piping, stone or native soil beneath the system is likely to occur. Only human wastes should enter the sewage system, water use should be conservative and cleaning agents cannot enter the system, as they kill bacteria.

2. Once per year, the depth of scum and sludge in the septic tank should be measured and the tank shall be pumped if:

   a. The sludge level is within 12 inches of the bottom of the outlet.

   b. The scum layer is within 3 inches of the top of the outlet.

   c. If A or B is anticipated to occur prior to the next inspection.

   d. In any case, the tank shall be pumped at a maximum 4–year interval.

3. Once a year, the septic tanks, pump chambers, distribution box and effluent filter should be inspected by a qualified professional. The person that performs the inspection is cautioned to consult with a health professional prior to performing the above items. Any settled solids should be removed from the distribution box and the effluent filter should be cleaned.

4. Above items 1–3 are intended to prolong the life of the system, not guarantee it.

5. The Designer is not responsible for use of the system in ways that are not consistent with the design of the system such as but not limited to chemicals, septic system additives, garbage disposals, backwash from softeners or other water treatment devices, poor maintenance, or abnormal weather.

0 40 80 120 160 200

GRAPHIC SCALE 1 inch = 40 feet

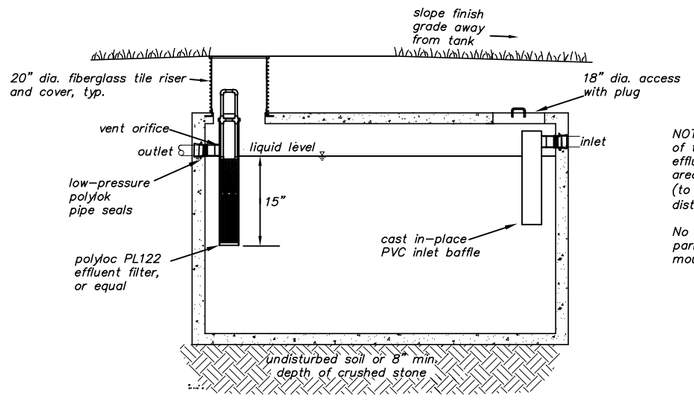

Design Notes:

1. Concrete: 4,000 psi after 28 days. Reinforcing 6x6/10x10 and fibers.
2. Heavy–duty septic tank tops reinforced with 5/8" rebar @ 12" o.c. each way.
3. Keyed joint sealed with butyl rubber.
4. Excavation must be at least 12" wider and longer than tank size.
5. Provide watertight pipe connections using pre–fab 4" plastic boots or non–shrink grout.
6. The tank shall be leak–tested for 24 hours prior to backfilling.
7. The cover shall be child–proof.

1500 Gallon Seamless Precast Concrete Septic Tank
NTS

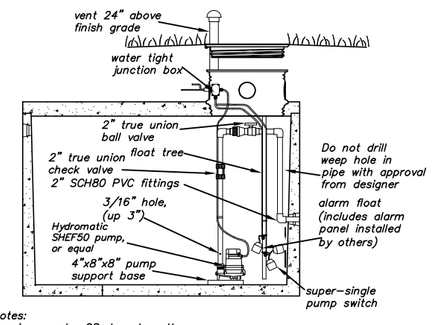

Design Notes:
1. 4000 psi concrete, 28 day strength.
2. Low pressure seals designed to accept 4" C.I. or PVC pipe.
3. Requires effluent pump and a super single pump switch with a swing setting for a 190 gallon dose set 6" above the base of the pump with a high level alarm set 6" above the "pump on" setting. There shall be a minimum of one day storage above "alarm on" level.
4. Pump station shall be leak tested for 24 hours prior to backfilling.
5. It should be noted that any deviation in the location or elevation of the septic tank, pump station, or the disposal system from the designed location may require a different size pump.

1500 Gallon Seamless Precast Concrete Pump Station
NTS

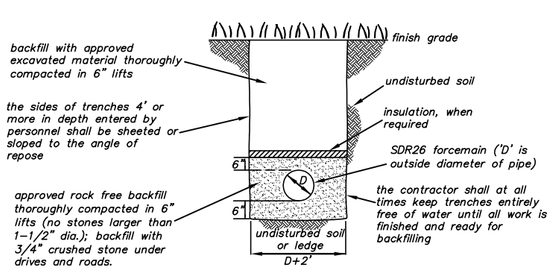

Note: If cover is less than 5', place 2" wide by 4" thick insulation board, suitable for burial, on a 6" bed of sand over pipe. In no case shall depth of cover be less than 3'. At driveway and road crossings, depth of cover shall not be less than 4'.

Forcemain Trench Notes:

1. Backfill and bedding shall be properly compacted.
2. Bedding material shall normally consist of well–graded sands and gravels with a maximum size of 3/4".
3. Backfill shall not contain:
   a. Any stones more than 12" (1–1/2" max. diameter within 2' of the outside of the pipe) in the largest dimension.
   b. Be greater than 50 pounds.
   c. Contain any frozen, wet or organic material.
4. Use rigid foam insulation at the rate of 1" for every foot less than 4' of cover over forcemain.
5. Forcemain shall be tested for leakage.
6. At any crossing under a road or drive, forcemain shall be encased in a 4" PVC sleeve. Said sleeve is to extend 8' in either direction from edge of traveled way.
7. The sides of the trenches 4' or more in depth entered by personnel shall be sheeted or sloped to the angle of repose as defined by O.S.H.A. standards.

Forcemain Trench
NTS

State of Vermont Mound Sand Specifications

Fill Material: The fill material from the natural soil plowed surface to the top of the trench or bed shall be sand texture with one of the following sieve analyses:

a. Sieve Number	Opening (mm)	Percent Passing, by Weight
3/8	9.500	85 – 100
40	0.420	25 – 75
60	0.240	0 – 30
100	0.149	0 – 10
200	0.074	0 – 5

b. Sieve Number	Opening (mm)	Percent Passing, by Weight
4	4.750	95 – 100
8	2.380	80 – 100
16	1.190	50 – 85
30	0.590	25 – 60
50	0.297	10 – 30
100	0.149	2 – 10

c. Sieve Number	Opening (mm)	Percent Passing, by Weight
3/8	9.500	85 – 100
40	0.420	30 – 50
200	0.074	0 – 10

The material must meet specifications a, b, or c. Interpolation of analyses is not permitted. Fill material b is ASTM Specification C–33 and is intended for manufactured material.

Note: Cut and remove all above ground vegetation with a hand mower. The existing ground shall not be graded or excavated. The contractor shall plow the surface to a depth of 7"–8", parallel to the land contour with the plow throwing the soil uphill.

Construction equipment shall not be driven across the original ground or the plowed surface. A minimum of 6" of sand shall be placed over the plowed surface for a lightweight construction equipment base.

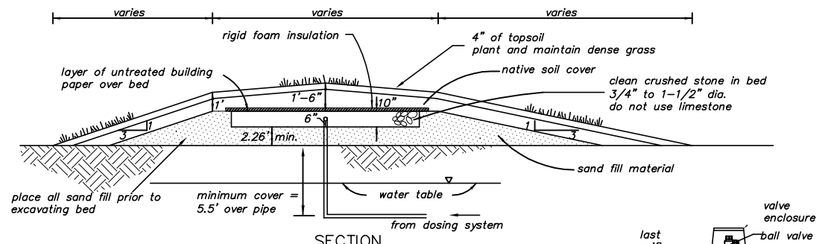

SECTION

Mound System Cross Section
NTS

NOTE: The land area 25' downgradient of the elevated sand mound is the effluent dispersal area and soil in this area may not be removed or disturbed (to extent of ownership). Do not disturb soil within 10' of all other toes.

No construction, vehicular traffic or parking is permitted on top of the mound or subsurface tanks.

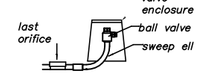

Flushing Valve Detail
NTS

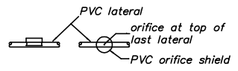

Orifice Shield Detail
NTS

Drilled Well Isolation Distances

Item	Horizontal Distance (feet) Disposal field	Septic tank	Sewer
Drilled well	a*	50	50
Lake and pond impoundment – standing water	50	25	25
River, streams	50	25	10
Drainage swales, roadway ditches	25	–	–
Main or municipal water lines	50	50	b*
Service water lines	25	25	b*
Roadways, driveways, parking lots	10	5	–
Top of embankment, or slope greater than 30%	25	10	–
Property line	25	10	10
	10	10	10
Other disposal field or replacement area	10	–	–
Foundation, footing drains, curtain drains	35	10	–
Suction water line	100	50	50

* a) see presumptive isolation zone on plan
* b) see Vermont Water Supply Rule

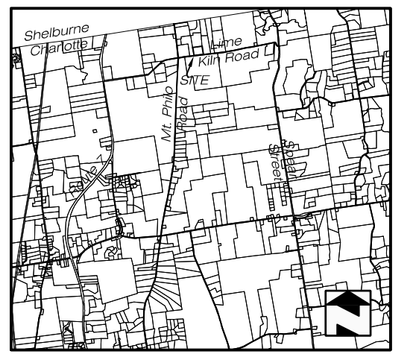

Location Plan n.t.s.

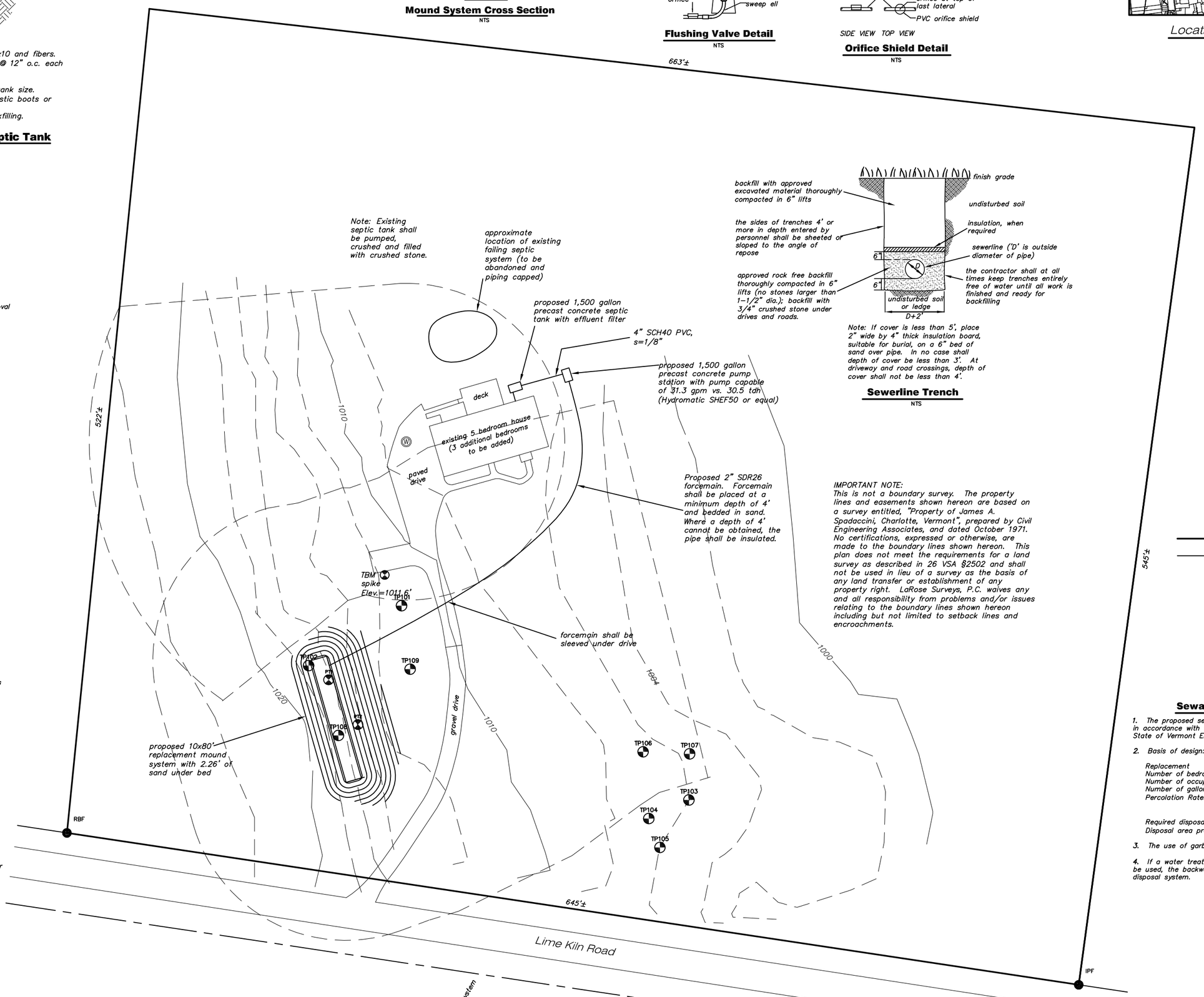

Note: If cover is less than 5', place 2" wide by 4" thick insulation board, suitable for burial, on a 6" bed of sand over pipe. In no case shall depth of cover be less than 3'. At driveway and road crossings, depth of cover shall not be less than 4'.

Sewerline Trench
NTS

Legend

- Project Boundary Line
- Adjoiner Boundary Line
- IPF/RBF — Iron Pipe/Rebar Found
- Existing Drilled Well
- Test Pit
- Percolation Test
- ± — More or Less

Sewage Design Information

1. The proposed sewage disposal system shall be constructed in accordance with all applicable Town Regulations and the State of Vermont Environmental Protection Rules.

2. Basis of design:

   Replacement
   Number of bedrooms = 8
   Number of occupants = 11
   Number of gallons per day = 770
   Percolation Rates =

Perc Test	Depth	Rate (mpi)
A	21"	29.2
B	18"	21.7

   Required disposal area: 770 sf
   Disposal area provided: 10' x 80' = 800 sf

3. The use of garbage disposals is not recommended.

4. If a water treatment system (water softener) is going to be used, the backwash water may not be discharged into the disposal system.

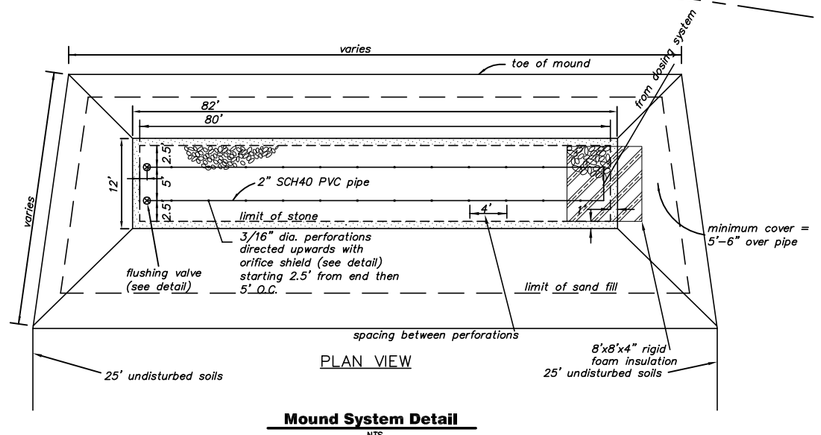

PLAN VIEW

Mound System Detail
NTS

NOTE: Within the parcel boundaries shown hereon, the contour interval is two–feet and is based on a topographical survey prepared by LaRose Surveys, PC completed in November 2014. Outside the parcel boundaries, the contour interval is ten–feet and is based solely on the State of Vermont Natural Resources Atlas. No liability is assumed by the undersigned as to the accuracy of said contours.

THE CONTRACTOR SHALL NOTIFY "DIGSAFE" AT 1–888–DIG–SAFE PRIOR TO ANY EXCAVATION.

IMPORTANT NOTE:
This is not a boundary survey. The property lines and easements shown hereon are based on a survey entitled, "Property of James A. Spadoccini, Charlotte, Vermont", prepared by Civil Engineering Associates, and dated October 1971. No certifications, expressed or otherwise, are made to the boundary lines shown hereon. This plan does not meet the requirements for a land survey as described in 26 VSA §2502 and shall not be used in lieu of a survey as the basis of any land transfer or establishment of any property right. LaRose Surveys, P.C. waives any and all responsibility from problems and/or issues relating to the boundary lines shown hereon including but not limited to setback lines and encroachments.

compiled & prepared by

LaRose Surveys, P.C.
Land Surveyors – Boundary Consultants
Water & Septic System Designers
P.O. Box 388 – 29A West Street
Bristol, Vermont 05443
802.453.3818
www.larosesurveys.com
info@larosesurveys.com

STATE OF VERMONT — KEVIN R. LAROSE NO. 4438 — LICENSED DESIGNER

a site plan & detail sheet for lands of

DONNA L. HUDGIN

Lime Kiln Road
Charlotte, Chittenden County, Vermont

July 6, 2016

PROJECT #14077