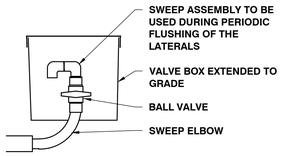

FLUSHING VALVE DETAIL

N.T.S.

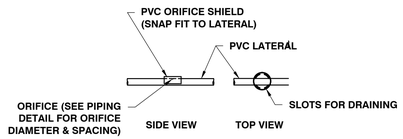

ORIFICE SHIELD DETAIL

N.T.S.

SWR-013 Orifice/Flush Valve

SWR-013 REVISED 10/17/2014

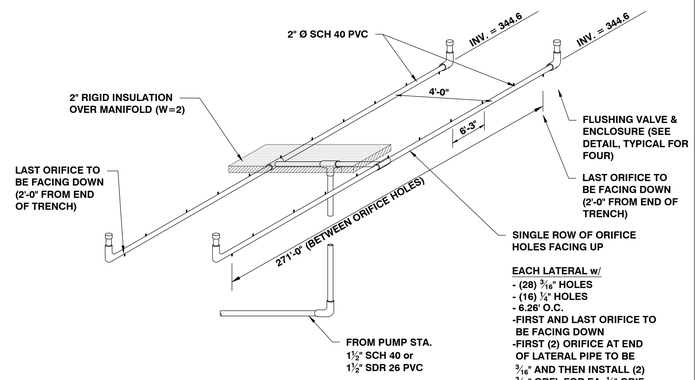

TRENCH PIPING DETAIL

N.T.S.

DET-022 Trench Piping

DET-022

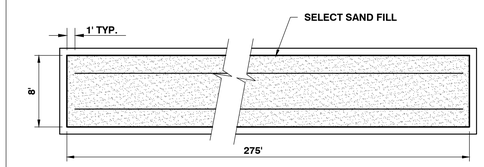

TYPICAL TRENCH PLAN

N.T.S.

SWR-023 Typical Trench

SWR-023

Basis of Design

Design Flow
Total Flow 2,146 GPD

Performance Based Design Approach
Limiting Soil Condition - Loam
Limiting Slope Condition - 13.3%
Linear Loading Rate - 14.0 GPD/LF/VLF

Design Trench - 8-foot Seepage Bed
Standard Effluent Application Rate = 1 GPD/SF
Design Linear Loading Rate - 8 GPD/LF

Resulting Groundwater Mounding
(8 GPD/LF)/(14.0 GPD/LF) = 0.57 ft = 7"

Limiting Depth to SHGWT under Bed/Trench = 13"
Resulting Unsaturated Depth = 13" - 7" = 6"

Required Separation to Mounded SHGWT = 36"
Min. Required Depth of Sand under Bed 36" - 6" = 30"

Limiting Depth to SHGWT at Toe of Mound = 16"
Resulting Unsaturated Depth = 16" - 7" = 9"

Limiting Depth to SHGWT at 25' below Toe of Mound = 16"
Resulting Unsaturated Depth = 16" - 7" = 9"

Disposal Field
Min Required Length of Bed 2,146 GPD / (8 GPD/LF) = 268 feet
Limiting Percolation Rate = See Above
Required Effective Basal Area = 2,146 GPD/(0.74 GPD/SF) = 2,900 SF
Basal Area Provided = 6,875 SF
Separation Distance to Property Line
10 FT to Toe, 57 FT provided
25 FT to bed, 80 FT provided
Required Separation to Bedrock = 4 FT, 6 FT min. provided

Pressure Distribution System
Minimum Required Number of Orifices
275 LF Bed x 8 FT width / (25 GPD/SF) = 88 Use 88.
Provide Two 1½" Distribution Pipes, 272 FT long
See Detail for Orifice Sizing and Layout
Fill Volume of Distribution Piping = 50 Gal
Minimum Required Dose Volume = 50 Gal x 5 = 250 Gal
Minimum Number of Doses per Day = 4
Maximum Dose Size = 2,146 GPD/4 = 536 Gal

Pump Sizing
344.6 = Invert of Distribution Piping in Mound (or High Pt of FM)
346.6 = Low Elevation in Pump Station (FT)
-2.0 = Elevation Head (FT)

Length of SDR 26 PVC Force Main = 70 FT
Diameter of Force Main = 1½"
Design Flow Rate = 81 GPM
Friction Loss per 100 LF = 46.8 FT
32.76 = Resulting Friction Head (FT)
-2.0 = Elevation Head (FT)
3.0 = Minor Losses (FT)
3.0 = Design Residual Pressure (FT)
36.76
= Design TDH
Use Hydromatic SHEF100, 1 Ph, 60 Hz, 230 V, 1.0 HP or approved equal

Pump Station Emergency Storage
Required=536 GAL, 2,000 GAL Provided

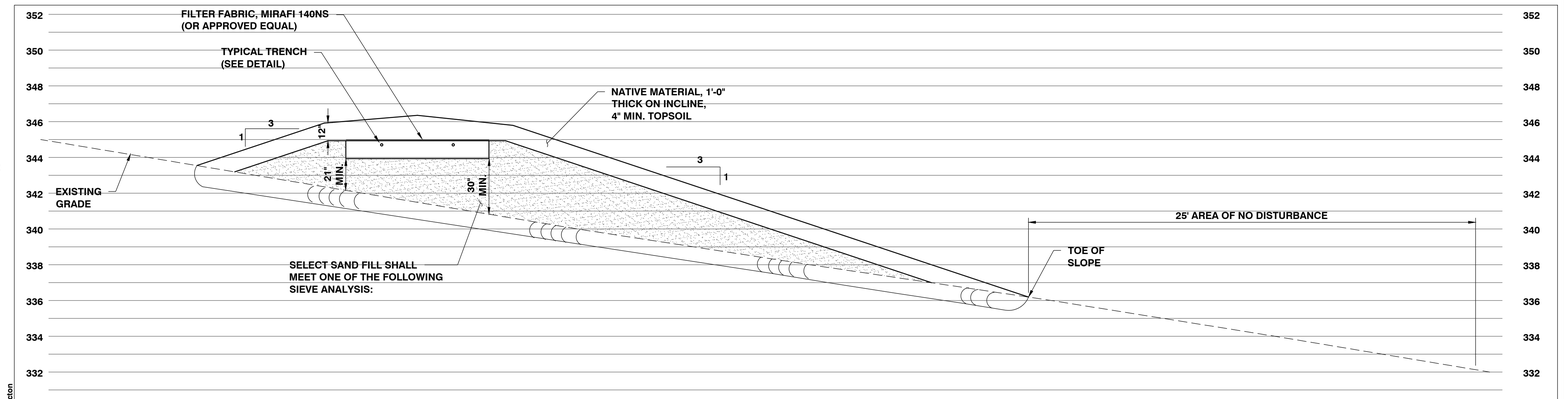

SIEVE #	% PASSING
3/8	85–100
40	25–75
60	0–30
100	0–10
200	0–5

SIEVE #	% PASSING
4	95–100
8	80–100
16	50–85
30	25–60
50	10–30
100	2–10

SIEVE #	% PASSING
3/8	85–100
40	30–50
200	0–10

TYPICAL MOUND SECTION

1/4" = 1'-0"

SWR-024 Typical Mound Section

SWR-024

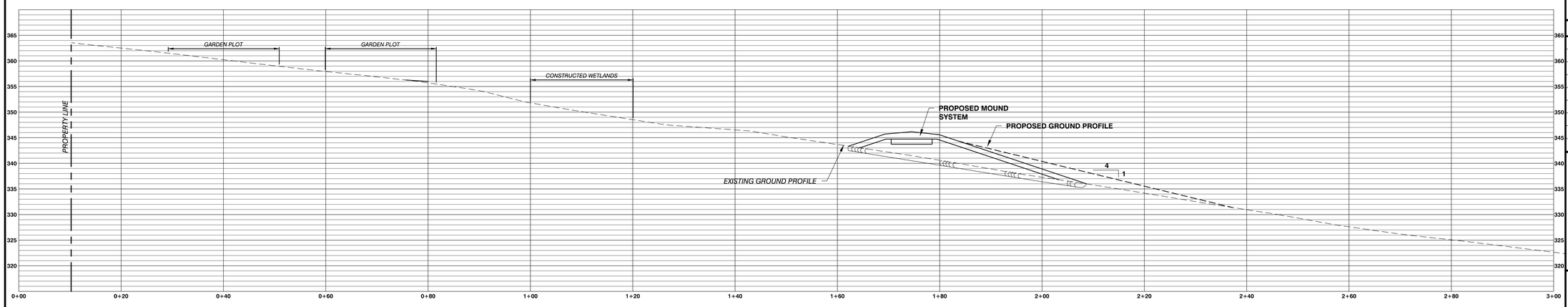

CROSS SECTION A-A

1"=10'

SITE ENGINEER:

CIVIL ENGINEERING ASSOCIATES, INC.
10 MANSFIELD VIEW LANE, SOUTH BURLINGTON, VT 05403
802-864-2323 FAX: 802-864-2271 web: www.cea-vt.com

COPYRIGHT © 2016 – ALL RIGHTS RESERVED

DRAWN
SAL

CHECKED
DSM

APPROVED
DSM

OWNER:

PHILO RIDGE, L.L.C.

2766 MT. PHILO RD.
CHARLOTTE, VT.

PROJECT:

SITE IMPROVEMENTS

2766 MT. PHILO RD.
CHARLOTTE, VT.

DATE	CHECKED	REVISION

SEWER DETAILS

DATE
OCT., 2016

SCALE
AS SHOWN

PROJ. NO.
16107

DRAWING NUMBER
C2.3