CIVIL ENGINEERING ASSOCIATES, INC.
10 Mansfield View Lane
South Burlington, VT 05403
Phone: 802-864-2323
Fax: 802-864-2271
E-Mail: mail@cea-vt.com

September 24, 2015

Ms. Jeanine McCrumb, Health Officer
Town of Charlotte Offices
PO Box 119
Charlotte, Vermont 05445

Re: Tiller House – New Wastewater Disposal System
362 Holmes Road, Charlotte
State Wastewater & Potable Water Supply Permit Application

Dear Ms. McCrumb:

Michelle & Tom Tiller are looking to upgrade the existing wastewater disposal serving their 5-bedroom home. The current wastewater disposal system is located between the house and the lake. The Tiller's, with the understanding that they will likely be making some modifications to the house, would like to take the existing wastewater system out of service in favor of a new mound system depicted in the attached plan set.

The goal of the siting of the system was to avoid having to remove any of the existing pine trees on the north end of the system while minimizing impacts on the location of the future barn to the west.

The existing topography varies from a mild gradient under the trench to a moderate slope at and below the toe of the proposed system footprint.

This site and supporting test pits were reviewed by Mr. Spencer Harris on behalf of the Town on November 10, 2014.

As the existing home is located downgradient of the proposed mound system, a pump station will be used to convey the effluent and to pressurize the mound distribution system.

The specific components of the system include:

- 1,000 gallon septic tank with effluent filter
- Simplex pump station located in a 1,000 gallon tank
- Mound type wastewater disposal system for a 5-BR home.

The wastewater disposal system has been designed with a hydrogeologic study as the depths to SHGWT and slopes vary within the site. Permeability values for the existing soils have been assigned based upon those embedded within the Performance Based

design parameters and reconciled against the permeability worksheet. The critical component of the design occurred at two locations:

1. At the 25' distance down-gradient of the toe of the system where the 6" of unsaturated material is required.

2. The 3' foot separation from the bottom of the bed to the mounded grounded water. Meeting this requirement by raising the bottom of the trench above the 12" minimum also satisfied the required three foot separation

The isolation distance for the proposed mound wastewater disposal system does not extend beyond the property lines and as such only the Form 5 notification is required.

This completes our summary of the proposed wastewater system and potable water supply components for the property at 362 Holmes Road. If you should have any questions, please feel free to contact me at 864-2323 x310.

Respectfully,

David S. Marshall. P.E.
Project Engineer

\dsm

Enclosures
- Application Form
- Application Fee ($500)
- Act 145 Form 5 Abutter Notice Certification
- Two sets of full size plans, one set of 11x17
- Hydrostudy Report w Attachments
- Basis of Design
- Pump Cut Sheets
- CD of PDF's of application

cc: T. Tiller (w/ enclosures (1 set 11x17), C. Wickersham (PDF only via e-mail)
CEA File 13229.01 (w/ enclosures 1 set 11x17 plans)

Drinking Water & Groundwater Protection Division - Permit Application

Wastewater System & Potable Water Supply

VERMONT
DEPARTMENT OF ENVIRONMENTAL CONSERVATION

For Office Use Only:

Application#	PIN#	Date Complete Application Received

Authority:
10 V.S.A. Chapter 64, the Environmental Protection Rules, Chapter 1, Wastewater System & Potable Water Supply Rules, and Chapter 21, Water Supply Rules, Appendix A. Part 11 - Small Scale Water Systems.

General Information:
The organization and/or content of this form may not be altered, however, the form is designed to expand to allow additional information to be entered. Changes in the organization and/or content of the form may result in an invalid application or permit.

In most cases a licensed designer will be required for your project and to help complete this application form. There are also line-by-line instructions available to assist with completing this form.

***NOTE:* We strongly suggest referring to the application instructions while completing this application form.**

Part I Applicant (Landowner) & Project Contact Information

Section A - Applicant Details (if Landowner is an Individual or Individuals)

1 Last Name	2 First Name (and Middle Initial if appropriate)
Tiller	Thomas C. & Michelle A.

3 Mailing Address Line 1	4 Mailing Address Line 2
362 Holmes Road	

5 Town/City	6 State/Province	7 Country	8 Zip/Postal Code
Charlotte	Vermont	United States	05445

9 Email Address	10 Telephone
tomtiller1@gmail.com	

Remove This Applicant

Add Another Applicant

Section B - Applicant Details (if Landowner is other than an Individual or Individuals, e.g. Corporations, Homeowner's Associations, etc.)

1 Registered Legal Entity or Organization Name	2 Telephone

3 Mailing Address Line 1	4 Mailing Address Line 2

5 Town/City	6 State/Province	7 Country	8 Zip/Postal Code
		United States	

Certifying Official
The Certifying Official must be a person who has signatory authority for the legal entity or organization that is the Applicant.

9 Certifying Official Last Name	10 Certifying Official First Name (and MI if appropriate)

11 Certifying Official Title

12 Certifying Official Email Address	13 Telephone

Remove This Applicant

Add Another Applicant

Section C - Primary Contact Information (if other than Applicant)

1 Last Name	2 First Name (and Middle Initial if appropriate)

3 Mailing Address Line 1	4 Mailing Address Line 2

5 Town/City	6 State/Province	7 Country	8 Zip/Postal Code
		United States	

9 Email Address	10 Telephone

Section D - Building/Business Owner Information

1 Last Name	2 First Name (and Middle Initial if appropriate)

3 Mailing Address Line 1	4 Mailing Address Line 2

5 Town/City	6 State/Province	7 Country	8 Zip/Postal Code
		United States	

9 Email Address	10 Telephone

Part II Certifying Designer(s) Information

1 Designer Last Name	2 Designer First Name (and Middle Initial if appropriate)
Marshall	David

3 Designer License#	4 Company Name
6019	Civil Engineering Associates, Inc.

5 Mailing Address Line 1	6 Mailing Address Line 2
10 Mansfield View Lane	

7 Town/City	8 State/Province	9 Country	10 Zip/Postal Code
South Burlington	Vermont	United States	05403

11 Email Address	12 Telephone
dmarshall@cea-vt.com	864-2323 x310

13 Designer Role(s) (check all that apply)

- ☒ Water Supply Designer
- ☒ Wastewater Disposal System Designer

Remove This Designer

Add Another Designer

Part III Property Location Information

Section A - Property Location

1 Please provide the property Town and the property address or a brief description of the location.

(a) Town or City	(b) Street or Road Location
Charlotte	362 Holmes Road

Section B - Center of Property GPS Coordinates

1 Enter the approximate center of property coordinates using GPS set for NAD83 or as derived from a map (map must be based on NAD83).

(a) Latitude
(in decimal degrees to five decimal places, ex. 44.38181°)

N 44.32551 °

(b) Longitude
(in decimal degrees to five decimal places, ex. -72.31392 °)

W (-) 73.28940 °

Part IV Project Information

Section A - General Project Information & Questions

1 Project Name (if applicable): Tiller Home

2 Total Acreage of Property: 22.3

3 Business Name (if applicable):

4 Detailed Project Description: Relocate existing 5-Bedroom wastewater disposal system away from the Lake with a new mound system.

5 (a) Were all existing buildings or structures, campgrounds, and their associated potable water supplies and wastewater systems substantially completed before January 1, 2007? ..... (●) Yes ( ) No

(b) Were all existing improved and unimproved lots in existence before January 1, 2007? ..... (●) Yes ( ) No

6 Does this application include subdividing the property? ..... ( ) Yes (●) No

7 Has anyone from the Drinking Water & Groundwater Protection Division's Regional Office been to the property?..... (●) Yes ( ) No

If Yes, enter the staff person's name and the date of the visit.

(a) Name of Staff Person: Spencer Harris

(b) Date of Visit (m/d/yyyy): 11/10/2014

8 Will any construction occur within 50 feet of a wetland boundary, mapped or designated? ..... ( ) Yes (●) No

If Yes, contact the Wetlands Program of the Watershed Management Division at (802) 338-4835.

9 Will more than one acre be disturbed during the entire course of construction, including all lots and phases? ..... (●) Yes ( ) No

If Yes, contact the Stormwater Program of the Watershed Management Division at (802) 241-4320.

10 Will there be any stream crossings by roads, utilities, or other construction? ..... ( ) Yes (●) No

If Yes, contact the River Corridor Mgmt. Program of the Watershed Management Division at:

Central & Northwest Vermont ..... (802) 879-5631
Southern Vermont ..... (802) 786-5906
Northeastern Vermont ..... (802) 751-0129

11 Is the project located in a special flood hazard area as designated on the flood insurance maps prepared for a municipality by the Federal Emergency Management Agency? ..... ( ) Yes (●) No

If Yes, show the special flood hazard area limits on the site plan.

12 Act 250: Has the Applicant (Landowner) subdivided any other lots of any size within a five mile radius of this subdivision, or within the environmental district within the last five years ? ..... ( ) Yes (●) No

If Yes, enter the town(s) and the associated number of lots in the table below:

	(a) Town	(b) Number of Lots
X		

Add Another Town/Lot

13 Is there any prior Act 250 jurisdiction on the tract of land?..... ( ) Yes (●) No

If Yes, enter the Act 250 permit number:

(a) Act 250 Permit Number:

Section B - Project Deed Reference

1 Please provide the Town, Parcel ID, Book, and Page reference for the current landowner's deed(s) to this property:

	(a) Town	(b) Parcel ID	(c) Book	(d) Page(s)
X	Charlotte		204	312

Add Another Deed Reference

Section C - Project Plan Reference

1 Please provide the following information for all water supply and wastewater disposal system plans being submitted.

	(a) Sheet#	(b) Title	(c) Plan Date	(d) Plan Revision Date
X	C1.0	Overall Site Plan	9/1/2015	
X	C1.1	Overall Wastewater Plan	9/1/2015	
X	C2.0	Sewer Details	9/1/2015	
X	C2.1	Sewer Details	9/1/2015	

Add Another Plan Reference

Section D - Existing Project Lot/Building Details

Please provide the existing project details. This section is used to describe what is existing for the project. For example, if you are subdividing an undeveloped 21-acre parcel, you would list the existing parcel. If you are revising the boundary lines of two commercial lots in an industrial park, and constructing an addition to an existing building you would list the existing lot numbers, existing acres, existing buildings, existing uses, construction date(s), prior permits, and answer the compliance questions.

1 Lot#	2 Lot Size (acres)	3 Existing Use of the Lot
1	23.2	Residential

4 Provide the following information for each building on the lot:

	(a) Building ID	(b) Existing Use	(c) Date Construction of Building Substantially Complete	(d) Prior Permits	(e) In compliance with with existing permits?
X	House	Residential	01-01-1970	None	◉ Yes ○ No

Add Another Building

Remove This Lot

Add Another Lot

Section E - Proposed Project Lot/BuildingDetails

This section is used to describe what you are proposing to do in this project. For example, if you were going to create 4 lots for construction of single family residences, you would list each lot, proposed acreage, proposed buildings, and proposed use.

1 Lot#	2 Lot Size (acres)	3 Proposed Use of the Lot
1	23.2	Residential

4 Is the lot being created as part of a subdivision? ..... ○ Yes ◉ No

5 Are you requesting that the Blood, Marriage, or Civil Union special fee be applied to this lot? ..... ○ Yes ◉ No

6 If the lot is exempt, please indicate the specific exemption from the Wastewater System and Potable Water Supply Rules? .....

7 Provide the following information for each building on the lot:

	(a) Building ID	(b) If building is exempt, indicate exemption	(c) Construction or increased flow?	(d) Proposed Use
X	House		☐	Residential

Add Another Building

Remove This Lot

Add Another Lot

Part V Water Supply Information

Section A - Water Supply Screening Questions

1 Are you proposing a new water supply or water service line or changes to a permitted but not constructed water supply or water service line for this project? ○ Yes ◉ No

2 Are you proposing changes to an existing water supply or water service for this project (including changes to location, design flows, or operational change)? ○ Yes ◉ No

3 Is there an existing connection to a water supply or water service line for this project? ◉ Yes ○ No

Complete Part V if you answered Yes to any of the above questions. A project with no existing or proposed water supply may skip to Part VI.

Section B - General Water Supply Questions

1 Does this project involve a failed water supply? ○ Yes ◉ No

2 Will any of the proposed water sources serve 25 or more people or have 15 or more service connections? ○ Yes ◉ No

If Yes, the applicant must contact the Drinking Water & Groundwater Protection Division at (802) 241-3400 for source, construction and an operating permit.

3 Are any of the existing or proposed water sources located within a special flood hazard area? ○ Yes ◉ No

4 Are any of the existing or proposed water sources located within a floodway? ○ Yes ◉ No

5 Are any of the proposed water sources located within 1 mile of a hazardous waste site as designated by the Waste Management Division and identified on the Agency mapping website? ○ Yes ◉ No

If Yes, please submit additional information on the site. The Waste Management Division can be reached at (802) 241-3888.

6 Does this project require an approval letter from the Drinking Water & Groundwater Protection Division for the construction of a public water system, municipal water line extension over 500 feet, or hydrants or sprinkler systems? ○ Yes ◉ No

If Yes, please submit a copy of the approval letter from the Drinking Water & Groundwater Protection Division.

7 Does the proposed or existing water supply(ies) use a water treatment device to obtain compliance with the quality requirements in the Water Supply Rule? ○ Yes ◉ No

If Yes, please submit additional information regarding the constituent(s) that exceeds the standards and plans, details, and specifications of the treatment device.

8 Is any portion of the proposed water supply located in or near a Water Source Protection Area as designated by the Drinking Water & Groundwater Protection Division? ○ Yes ◉ No

If in areas of known interference issues, contact the Drinking Water & Groundwater Protection Division at (802) 241-3400.

Section C - Individual Water Supply Details

Please provide the following information for each of the existing and proposed water supply(ies) serving a building or structure, or campground on the property.

1 Water Supply Name/Identifier	2 Water Supply Owner (if not Applicant)
3 Water Source Type	**4 Type of Change to Supply**

5 Lots/Buildings Served by this Water Supply System

	(a) Lot#	(b) Building ID	(c) Type of Change to the Building's Supply	Design Flows (Gallons Per Day) (d) Existing	(e) Change	(f) Total	(g) Rule or Meter Based Flows
X	1	Tiller House		560	0	560	Rule-based
				6	7	8	
				560	0	560	

Add Another Lot/Building Served by this Supply

9 Is this water supply located off-lot? ..... ○ Yes ◉ No

10 Is this water supply shared? ..... ○ Yes ◉ No

If the water supply is located off-lot or shared, submit a copy of the agreement to provide an easement prior to construction.

11 Is a variance being requested for this water supply? ..... ○ Yes ◉ No

If Yes, please submit additional details related to the variance request.

Remove This Water Supply

Add Another Water Supply

Section D - Water Supply Design Flows Summary Table

1 If the project includes more than one water supply, please list each water supply system and provide the total water supply design flows for the project. **IMPORTANT**: Please don't include systems that were identified in this Part on Section C, Line 4 as a "Replacement Area Designation" in this summary table.

		Design Flows (Gallons Per Day)		
	(a) Water Supply Name/Identifier	(b) Existing	(c) Change	(d) Total
X	Supply from Lake to House	560	0	560
		560	0	560

Add Another Water Supply

2 3 4

Part VI Wastewater Disposal System Information

Section A - Wastewater Disposal System Screening Questions

1 Are you proposing a new or replacement wastewater disposal system, a new wastewater service line, or changes to a permitted but not constructed wastewater disposal system or wastewater service line for this project? ..... ◉ Yes ○ No

2 Are you proposing changes to an existing wastewater disposal system, replacement wastewater disposal system, replacement area, or wastewater service line for this project (including changes to location, design flows, or operational change)? ..... ◉ Yes ○ No

3 Is there an existing connection to a wastewater disposal system or wastewater service line for this project?..... ◉ Yes ○ No

Complete Part VI if you answered Yes to any of the above questions.
A project with no existing or proposed wastewater disposal systems may skip to Part VII.

Section B - General Wastewater Disposal System Questions

1 Does this project involve a failed wastewater disposal system? ..... ○ Yes ◉ No

2 Do any of the systems require a curtain or dewatering drain as part of the design? ..... ○ Yes ◉ No

3 Is a hydrogeologic study required for this project? ..... ◉ Yes ○ No

4 For projects using soil-based wastewater systems having a total design flow that exceeds 1,000 gpd, is this project located in a Class A Watershed?..... ○ Yes ○ No ◉ NA

If Yes, indicate the Class A Watershed in which the system(s) is located:

(a) Class A Watershed Name

5 Are there any existing or proposed floor drains as part of this project?..... ◉ Yes ○ No

If Yes, indicate where the floor drains will discharge:

(a) Floor Drain Discharge Point

Outside Ground Surface

6 If the project utilizes an Innovative/Alternative System or Product, has the applicant received a copy of the Drinking Water & Groundwater Protection Division's approval letter? ..... ○ Yes ◉ No ○ NA

7 Is any portion of the proposed wastewater disposal system located in or near a Water Source Protection Area as designated by the Drinking Water & Groundwater Protection Division? ..... ○ Yes ◉ No

If Yes, contact the Drinking Water & Groundwater Protection Division at (802) 241-3400.

Section C - Individual Wastewater Disposal System Details

Please provide the following information for each of the existing and proposed wastewater disposal systems serving a building or structure, or campground on the property.

1 Wastewater Disposal System Name/Identifier	2 Wastewater Disposal System Owner (if not Applicant)
On-Site System	
3 Wastewater Disposal System Type	**4 Type of Change to System**
Mound	Rebuilt/Updated System

5 Lots/Buildings Served by this Wastewater Disposal System

	(a) Lot#	(b) Building ID	(c) Type of Change to the Building's System	Design Flows (Gallons Per Day) (d) Existing	(e) Change	(f) Infiltration	(g) Total	(h) Rule or Meter Based Flows
X	1	Tiller House	Rebuilt/Updated System	560	0	0	560	Rule-based

Add Another Lot/Building Served by this System

6	7	8	9
560	0	0	560

10 Is this wastewater disposal system located off-lot? ..... ○ Yes ● No

11 Is this wastewater disposal system shared? ..... ○ Yes ● No

If the wastewater disposal system is located off-lot or shared, submit a copy of the agreement to provide an easement prior to initiation of construction.

12 Is a variance being requested for this wastewater disposal system? ..... ○ Yes ● No

If Yes, please submit additional details related to the variance request.

13 If this wastewater disposal system type is a connection to an Indirect Discharge System, please provide the Indirect Discharge System ID number.

Indirect Discharge System ID Number

14 If this wastewater disposal system type is a connection to a municipal system, please select the town.

Town

15 If this wastewater disposal system is a soil-based system, please select the design approach used.

Design Approach Used

Performance Based

16 For soil-based systems, please check all that apply (Note: Store and dose does not apply to standard pump/pump chamber systems).

☐ Storage and Dose ☐ Filtrate ☐ Constructed Wetlands

17 If this is an Innovative/Alternative soil-based system, please select the system use type.

Innovative/Alternative System Use Type

18 If this is an Innovative/Alternative soil-based system, please select the Innovative/Alternative system or product.

Innovative/Alternative System or Product

Remove This Wastewater System

Add Another Wastewater System

Section D - Wastewater Disposal Systems Design Flows Summary Table

1 If the project includes more than one wastewater disposal system, please list each system on this page and provide the total wastewater disposal design flows for the project. **IMPORTANT**: Please don't include systems that were identified in this Part on Section C, Line 4 as a "Replacement Area Designation" in this summary table.

	(a) Wastewater Disposal System Name/Identifier	Design Flows (Gallons Per Day) (b) Existing	(c) Change	(d) Infiltration	(e) Total
X	Tiller House On-Site	560	0	0	560
	Add Another Wastewater System	2	3	4	5
		560	0	0	560

Part VII Application Fees

1 Fee Amount $500.00

2 Fee Calculation Details

Town of Charlotte SF Residence WW System.

Part VIII Designer Certification & Copyright License

Section A - Certifying Designer 1 Certification & Copyright License

"i hereby certify that in the exercise of my reasonable professional judgment, the design-related information submitted with this application is true and correct, and that the design included in this application for a permit complies with the Vermont Wastewater System and Potable Water Supply Rules and the Vermont Water Supply Rules.

As the individual who prepared this application, including all documents that are marked as copyrighted, I hereby grant a non-exclusive, limited license to the State to allow the documents to be made available for public review and copying in order to properly implement and operate the permitting programs for Wastewater Systems and Potable Water Supplies, and for no other purposes. As a condition to this license, the State agrees that it will not make any changes to such documents, nor will the State delete any copyright notices on such documents."

1 Check the design(s) you are certifying. This should be the same as the Designer Role(s) you selected in Part II, Section A, Line 13.

- [x] Water Supply Designer
- [x] Wastewater Disposal System Designer

1 Designer 1 Name	2 Designer 1 Signature	3 Signature Date
David S. Marshall, P.E.		9-24-15

Section B - Certifying Designer 2 Certification & Copyright License

"i hereby certify that in the exercise of my reasonable professional judgment, the design-related information submitted with this application is true and correct, and that the design included in this application for a permit complies with the Vermont Wastewater System and Potable Water Supply Rules and the Vermont Water Supply Rules.

As the individual who prepared this application, including all documents that are marked as copyrighted, I hereby grant a non-exclusive, limited license to the State to allow the documents to be made available for public review and copying in order to properly implement and operate the permitting programs for Wastewater Systems and Potable Water Supplies, and for no other purposes. As a condition to this license, the State agrees that it will not make any changes to such documents, nor will the State delete any copyright notices on such documents."

1 Check the design(s) you are certifying. This should be the same as the Designer Role(s) you selected in Part II, Section B, Line 13.

- [ ] Water Supply Designer
- [ ] Wastewater Disposal System Designer

1 Designer 2 Name	2 Designer 2 Signature	3 Signature Date

Part IX Applicant(s) Signature & Acknowledgements

In order to insure compliance with the requirements of the regulations administered by the Department of Environmental Conservation, Drinking Water & Groundwater Protection Division, it may be necessary to visit the property. As this would involve a Department employee entering private property, we request your approval to do so.

1 If we do visit your property, do you have any special instructions?

Pack out what you bring in.

"As landowner of the property for which I am requesting a permit from the Department of Environmental Conservation, I understand that by signing this application I am granting permission for the Department employees to enter the property, during normal working hours, to insure compliance of the property with the applicable rules of the Department.

I also understand that I am not allowed to commence any site work or construction on this project without written approval from the Department of Environmental Conservation.

If my project utilizes an Innovative/Alternative System or Product, I have received a copy of the Drinking Water & Groundwater Protection Division's approval letter and agree to abide by the conditions of the approval.

I also certify that to the best of my knowledge and belief the information submitted above is true, accurate and complete."

	2 Print Applicant Name	3 Applicant Signature	4 Signature Date
X	Thomas C. Tiller, Jr.	Thomas C. Tiller Jr.	9/15/15
X	Michelle A. Tiller	Michelle A. Tiller	9/15/15

Add Applicant Signature Block

ANR Form 5: Certification Statement for Wastewater System and Potable Water Supply Permits when there is no Required Notification of Overshadowed Property Owner(s)

A person submitting an application to the Secretary for a Wastewater System and Potable Water Supply Permit shall use this statement whenever overshadowing notification of affected landowners is not required (see guidance and instructions for examples).

Note: When the property subject to the permit application is owned by more than one person, only one of the landowners must sign this certification statement even though all landowners must sign the permit application itself.

I hereby certify that "overshadowing" notification is not required either because there is an exemption to the notification requirement or there are no landowners whose property may be affected by the proposed water and wastewater systems.

Signature Thomas C. Tiller Jr.

Name (Printed) **Tom Tiller**

Property Address ~~or Property Tax ID #~~ **362 Holmes Road, Charlotte**

Date of this certification **September 15, 2015**

(To Comply with Act 145 and Act 117 - 8-24-12 Last Revised 9-11-12)

Tiller Home
Charlotte, Vermont

Pump Station Basis of Design

Design Flow	560	GPD
Infiltration	0	GPD
20% Municipal Credit	0	
Total Design Flow	560	GPD
Average Daily Flow	0.58	GPM
Peaking Factor	5.00	
Peak Flow	2.92	GPM
Required Storage	560	gallons
Storage Provided	600	gallons
Force Main Dia.	2.00	Inches
Min. Cleansing Velocity	2.00	FPS
Min. Pumping Rate	19.57	GPM
Chosen Pumping rate	28.70	GPM
Length of FM to Mound	530.00	feet
Friction Losses to Mound	8.96	feet
High Point of FM in Mound	163.60	feet
Low Elevation in PS	129.00	feet
Elevation Change	34.60	feet
Minor headlosses	3.00	feet
Residual	3.00	feet
TDH	49.56	feet
Pump Cycle Storage	100	Gallons
Run Cycle	5.20	Minutes
Wet Well Detention Time	171.43	Minutes

System Curve

GPM	TDH
10.0	41.90
15.0	43.30
20.0	45.20
25.0	47.50
30.0	50.30
35	53.50

Pump Selection Hydromatic SHEF50 , 1 Ph, 230 v, 60 Hz, 5/10 HP

Wastewater Disposal System Design
Tiller Mound Site
24-Mar-15

560	GPD Bedrooms = 5
560	Design Flow (GPD)
0.58	Average Daily Flow (GPM)
6.2	Allowable application per linear foot (GPD/LF)
90	Linear feet of Trench Required (FT)
90	Equivalent Linear feet of Trench Proposed (FT)

Dosing Requirements

1.5	Diameter of Distribution Pipe (Inches)
2	Number of Distribution Pipes
176	Length of Distribution Pipe (FT)
16	Distribution System Volume (Gallons)
5.00	Required Dose Volume Factor
81	Required Minimum Dose Volume (Gallons)
4.00	Minimum Required Doses per Day
140	Maximum Dose Allowed (Gallons)
100.00	Chosen Dose Volume (Gallons)
5.00	Recommended Pumping Duration per Dose (Minutes)
20.00	Recommended Pumping Rate w/o Inflow (GPM)
20.58	Recommended Pumping Rate with Inflow (GPM)
28.70	Chosen Flow Rate (GPM)

Distribution Requirements

6.3	Trench width (FT)
567	Total Trench Area (SF)
25	Maximum Area per orifice Hole (SF)
23	Required Number of Orifice Holes
26	Number of Orifice Holes Proposed
0.77	Avg. Flow per Orifice (GPM)
166.6	Effluent Elevation Head

TRENCH 1

26	Total # of orifices
560	Total Design Flow (GPD)
90	Total Length of Trench (FT)
28.7	Chosen Design Flow (GPM)
28.71	Total Actual Design Flow (GPM)
0.04%	Percent Delta from Design

Tiller Mound Distribution System Design
24-Mar-15

1	Maximum Allowable application Rate per Square Foot (GPD/SF)
28.7	Design Pumping Rate to Entire Field (GPM)
560	Total Design Flow to Site (GPD)
1	Number of Trenches/Beds
163.6	Invert Elevation

Trench 1 (Bed)

9	Depth of Stone (inches)
1	Application Rate per Square Foot
90	Length of Section
560	Design Flow (GPD)
28.70	Design Flow (GPM)
23	Required Number of Orifices

Orifice Design

0.125	Diameter of orifice (Inches)
0	Number of orifices
3	Residual pressure (FT)
0.32	Design Flow per head (GPM)
0.00	Subtotal flow (GPM)
0.1875	Diameter of orifice (Inches)
8	Number of orifices
3	Residual pressure (FT)
0.72	Design Flow per head (GPM)
5.74	Subtotal flow (GPM)
0.25	Diameter of orifice (Inches)
18	Number of orifices
3	Residual pressure (FT)
1.28	Design Flow per head (GPM)
22.97	Subtotal flow (GPM)
26	Total # of orifices
23	Required Number of Orifice Holes
28.71	Total Flow
28.70	Total Rec. Design Flow This Trench (GPM)
0.04%	Percent Delta from Design
86	Length of Distribution Pipe (FT)
6.88	Spacing of orifice holes (FT)

HYDROMATIC®

PERFORMANCE DATA

SHEF50/100

SUBMERSIBLE HIGH HEAD EFFLUENT

Wholesale Products Page: 6370-1
Dated: January 2001
RPM: **3450** Discharge: **2"** Solids: **¾"**

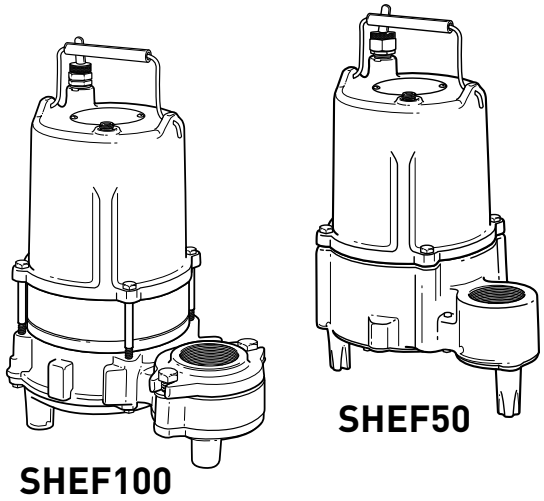

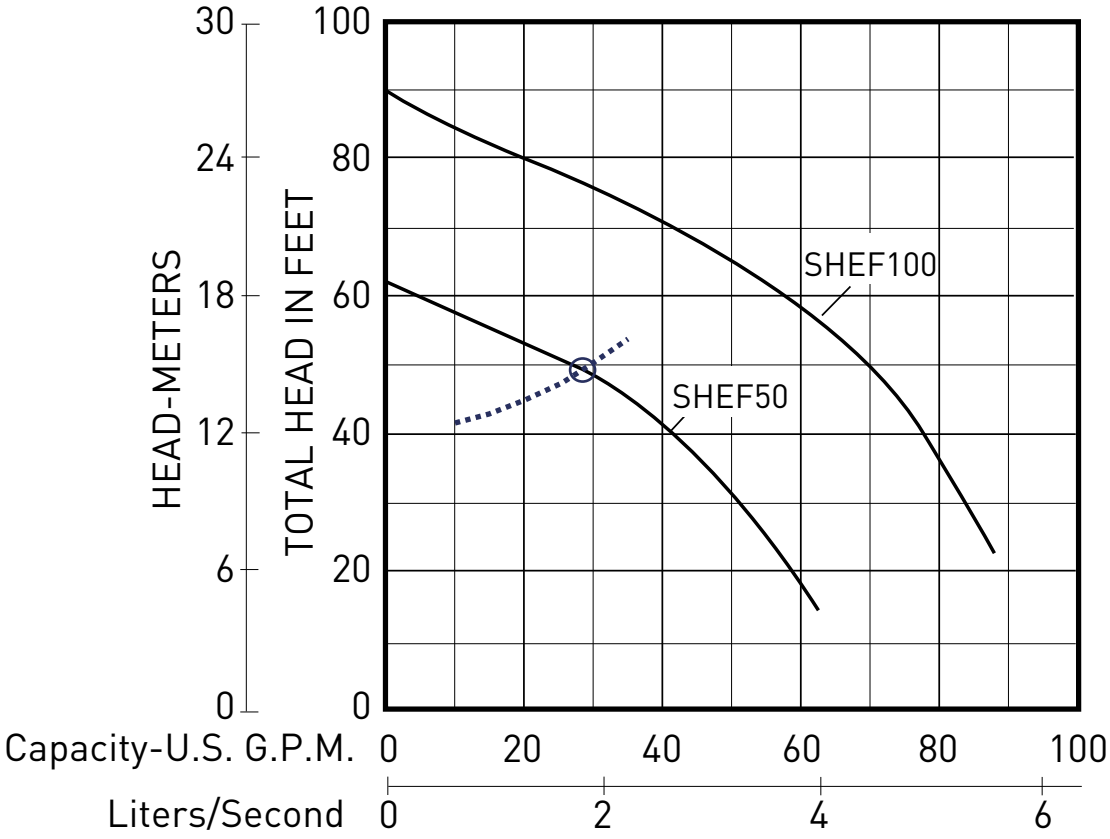

The curves reflect maximum performance characteristics without exceeding full load (Nameplate) horsepower. All pumps have a service factor of 1.2. Operation is recommended in the bounded area with operational point within the curve limit. Performance curves are based on actual tests with clear water at 70° F. and 1280 feet site elevation.

PENTAIR

Conditions of Service:

GPM:_____ **TDH**:_____

HYDROMATIC®

DIMENSIONAL DATA

SHEF50/100

SUBMERSIBLE HIGH HEAD EFFLUENT

Wholesale Products Page: 6370-2
Dated: January 2001

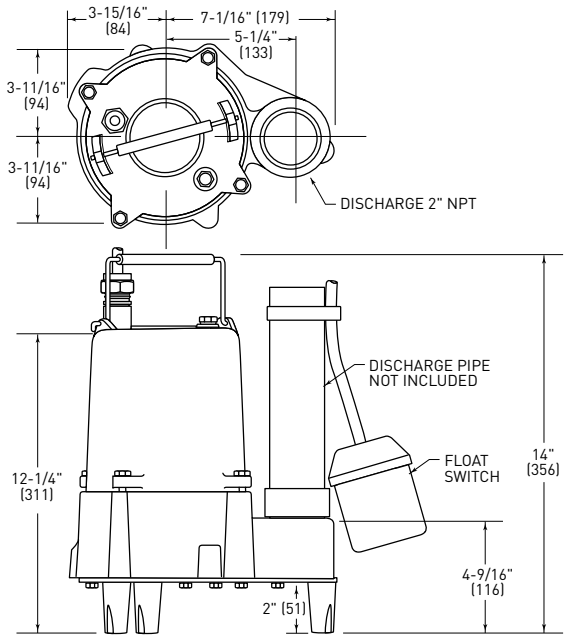

SHEF50

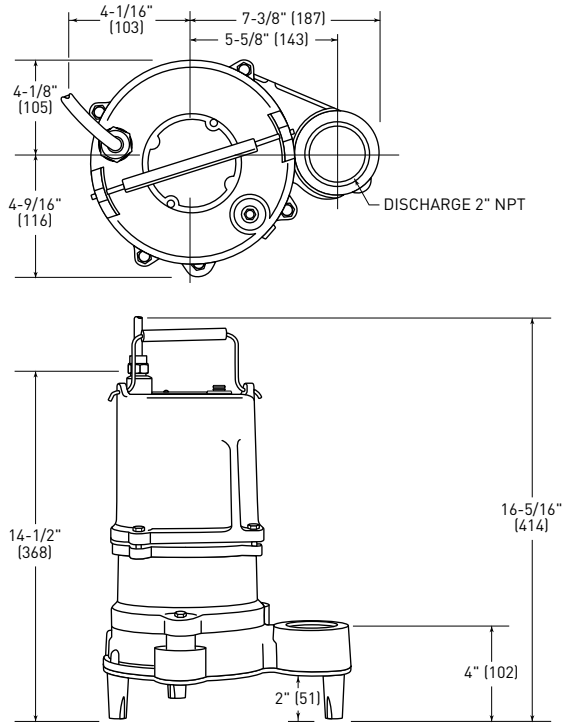

SHEF100

All dimensions in inches. Metric for international use. Component dimensions may vary ± 1/8 inch. Dimensional data not for construction purpose unless certified. Dimensions and weights are approximate. On/Off level adjustable. We reserve the right to make revisions to our product (s) and the product (s) specifications without notice.

PENTAIR

HYDROMATIC®

ELECTRICAL DATA

SHEF50

SUBMERSIBLE HIGH HEAD EFFLUENT

Wholesale Products Page: 6370-3
Dated: January 2001

MODEL: SHEF50

R.P.M.	3450
MOTOR TYPE	THERMAL OVERLOAD WITH AUTOMATIC RESET
MOTOR PROTECTION	AUTOMATIC RESET / THERMAL OVERLOAD

HP	VOLTAGE	PHASE	NEC CODE	SERVICE FACTOR	FULL LOAD AMPS
1/2	115	1	-	1	14.5
	200				7.6
	230	3			3.1
	460				1.6
	575				1.2

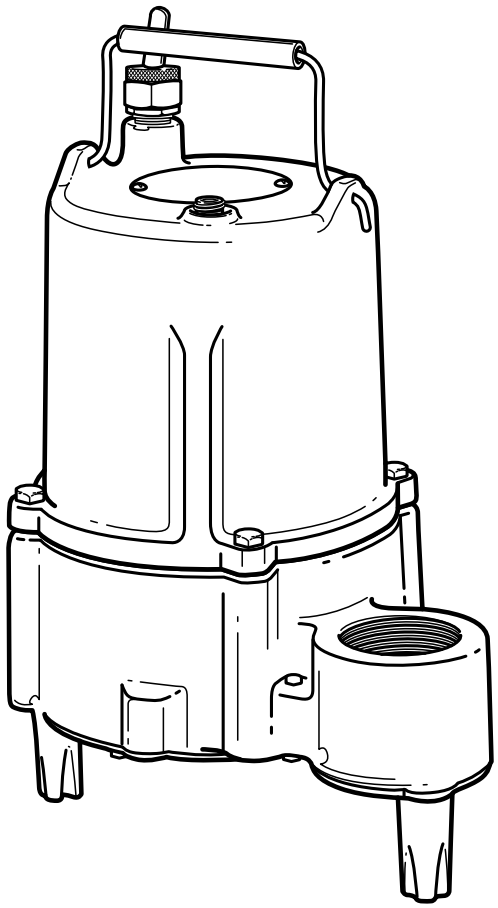

PENTAIR

HYDROMATIC®

ELECTRICAL DATA

SHEF100

SUBMERSIBLE HIGH HEAD EFFLUENT

MODEL: SHEF100

R.P.M.	3450
MOTOR TYPE	OIL FILLED WITH AUTOMATIC RESET THERMAL OVERLOAD
MOTOR PROTECTION	AUTOMATIC RESET / THERMAL OVERLOAD

HP	VOLTAGE	PHASE	NEC CODE	SERVICE FACTOR	FULL LOAD AMPS
1	200	1	-	1	12.1
	230				12.1
	230	3			5.8
	460				2.8
	575				1.9

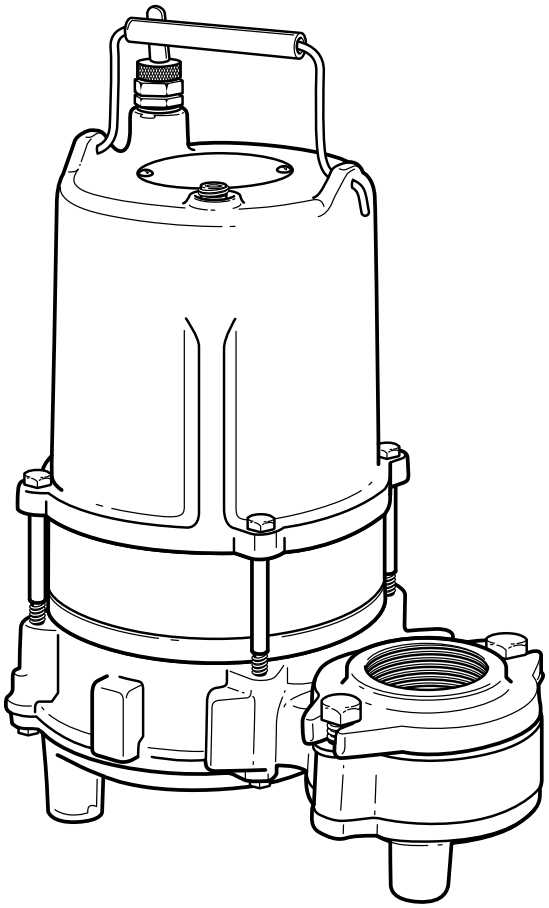

PENTAIR

HYDROMATIC®

TECHNICAL DATA

SHEF50

SUBMERSIBLE HIGH HEAD EFFLUENT

Wholesale Products **Page:** 6370-5
Dated: January 2001

MODEL: SHEF50

Physical Data

DISCHARGE SIZE	2" NPT
SOLIDS SIZE	¾"
IMPELLER TYPE	NON CLOG
CABLE LENGTH	20' STANDARD 30' OPTIONAL
PAINT	PAINTED AFTER ASSEMBLY DARK GREEN, WATER REDUCIBLE ENAMEL, ONE COAT, AIR DRIED.

Temperature

MAXIMUM LIQUID	140°F
MAXIMUM STATOR	-
OIL FLASH POINT	-

Technical Data

POWER CORD TYPE		SJTW / STW-A
MATERIALS OF CONSTRUCTION	MOTOR HOUSING	CAST IRON
	CASING	CAST IRON
	IMPELLER	THERMOPLASTIC
	MOTOR SHAFT	416 STAINLESS STEEL
	HARDWARE	STAINLESS STEEL
	"O" RINGS	BUNA-N
MECHANICAL SEALS Standard:		CARBON / CERAMIC
UPPER BEARING		BALL
LOWER BEARING		BALL

PENTAIR

HYDROMATIC®

TECHNICAL DATA

SHEF100

SUBMERSIBLE HIGH HEAD EFFLUENT

MODEL: SHEF100

Physical Data

DISCHARGE SIZE	2" NPT
SOLIDS SIZE	¾"
IMPELLER TYPE	NON CLOG
CABLE LENGTH	20' STANDARD 30' OPTIONAL
PAINT	PAINTED AFTER ASSEMBLY, DARK GREEN, WATER REDUCIBLE ENAMEL, ONE COAT, AIR DRIED.

Temperature

MAXIMUM LIQUID	140°F
MAXIMUM STATOR	-
OIL FLASH POINT	-

Technical Data

POWER CORD TYPE		SJTW / STW-A
MATERIALS OF CONSTRUCTION	MOTOR HOUSING	CAST IRON
	CASING	CAST IRON
	IMPELLER	THERMOPLASTIC
	MOTOR SHAFT	STAINLESS STEEL
	HARDWARE	STAINLESS STEEL
	"O" RINGS	BUNA-N
MECHANICAL SEALS Standard:		CARBON / CERAMIC
UPPER BEARING		BALL
LOWER BEARING		BALL

HYDROMATIC®

SPECIFICATION DATA

SHEF50/100

SUBMERSIBLE HIGH HEAD EFFLUENT

Wholesale Products **Page:** 6370-7
Dated: January 2001

MODELS: SHEF50 and SHEF100

1.01 **GENERAL**

Contractor shall furnish all labor, materials, equipment and incidentals required to provide _____ (Qty.) submersible centrifugal high head effluent pump(s) as specified herein. The pump models covered in this specification are the SHEF 50 and SHEF100. The pump furnished for this application shall be MODEL _____ as manufactured by Hydromatic Pumps.

2.01 **DESIGN CONDITIONS**

Each pump shall be rated _____ H.P., _____ volts, _____ phase, _____ hertz and operate at _____ RPM.

3.01 **OPERATING CONDITIONS**

The pump shall deliver _____ U.S. GPM/LPS at feet/meters TDH, and handle a _____ inch solid. The curve submitted for approval shall state, in addition to head and capacity performance, solid handling capability, amp rating, and design impeller diameter.

4.01 **CONSTRUCTION**

Each pump shall be of the sealed submersible type, incorporating features normally found in pumps furnished for the residential market.

These features include:

1. The pump volute, motor, and seal housing shall be high quality gray cast iron, ASTM A-48, Class 30.
2. The pump inlet shall be open and clear, without screening to provide access for effluent and septic tank solids.
3. All external mating parts shall be machined and Buna N, O-Ring sealed.
4. All fasteners exposed to the pumped liquid shall be 300 series stainless steel.
5. All power cords shall be water resistant UL or CSA approved, with double insulation, and sized as a function of Amp. draw.

5.01 **MOTOR AND SHAFT**

The stator, rotor and bearings shall be mounted in a sealed submersible type housing. Single phase motors shall be split phase with centrifugal switch and start capacitor. Three phase motors shall be Polyphase. Full Load and Locked Rotor Amps as well as Start and Run winding resistance shall be tabulated for each pump.

6.01 **BEARINGS, SHAFT AND MECHANICAL SEAL**

An upper radial and lower thrust bearing shall be required. The upper and lower bearings in the SHEF50 and SHEF100 shall be heavy duty single row ball bearings. The bearings will be permanently and continuously lubricated and cooled by the dielectric oil which fills the motor housing. The motor shaft shall be corrosion resistant steel and sealed from the pumped liquid with a carbon ceramic mechanical seal.

7.01 **IMPELLER**

The Impeller in the SHEF50/100 shall be high capacity, two vane, high head design with four pump out vanes on the back side. These vanes wash out grit and stringy material that will damage the shaft and mechanical seal.

8.01 **AUTOMATIC CONTROL**

All single phase pumps should be capable of automatic operation.

9.01 **FLOAT SWITCH**

The SHEF50 and SHEF100 pumps are supplied with a tilt sensitive wide-angle float switch which is sealed in a non-corrosive PVC enclosure. The switch is UL listed for water and sewage and CSA certified. The float switch shall also be fitted with a piggy-back plug that allows the pump to be operated manually without removal from the sump.

10.01 **PAINTING**

All cast iron parts shall be painted before assembly with a water reducible alkyd air dried enamel. The paint shall be applied in one coat with a minimum thickness of 3 to 4 mils.

11.01 **TESTING**

All pumps shall be individually tested to include the following:

1. The pump and power cord shall be visually inspected for imperfections, cuts or nicks.
2. The pump shall have a ground continuity check and the motor chamber shall be Hi-potted to test for moisture content and/or insulation defects.
3. The motor and volute housing shall be pressurized and a 10 second air leak decay test run.
4. Oil is added, and the pump is run. Voltage and current are monitored visually, electronically, and the tester listens for any noise or malfunction.

PENTAIR

USA
293 WRIGHT STREET, DELAVAN, WI 53115 WWW.HYDROMATIC.COM
PH: 888-957-8677 ORDERS FAX: 800-426-9446

CANADA
269 TRILLIUM DRIVE, KITCHENER, ONTARIO, CANADA N2G 4W5
PH: 519-896-2163 ORDERS FAX: 519-896-6337

Because we are continuously improving our products and services, Pentair reserves the right to change specifications without prior notice.

© 2013 Pentair Ltd. All Rights Reserved.

PENTAIR

SHEF100 Shown

HYDROMATIC® SHEF50/100 SUBMERSIBLE HIGH HEAD EFFLUENT PUMPS

WWW.HYDROMATIC.COM

SHEF50/100
Submersible High Head Effluent Pumps

Applications:

- Septic Tank Effluent
- High Head Sump
- Dewatering

SHEF100 Features:

- 1 HP
- 208-230 voltage (1ø) 208-230/460, 575 voltage (3ø)
- 2" discharge
- 3/4" solids handling
- Capacities to 87 GPM
- Heads to 90 feet
- Automatic or manual models

SHEF50 Features:

- 1/2 HP
- 115/208-230 dual voltage (1ø) 208-230/460, 575 voltage (3ø)
- 2" discharge
- 3/4" solids handling
- Capacities to 63 GPM
- Heads to 63 feet
- Automatic or manual models

SHEF50 Shown

SHEF100 Shown

The HYDROMATIC® SHEF50/100 submersible pumps are specifically designed to meet the demands of residential high head septic tank effluent or sump applications. The 2 inch NPT discharge pumps feature an energy-efficient 1/2 or 1 horsepower motor, automatic and manual versions, and a wide variety of voltages including dual voltage 208-230 volt single and three phase. The SHEF50 can handle capacities up to 63 gallons per minute and heads to 63 feet. The SHEF100 can handle capacities up to 87 gallons per minute and heads to 90 feet.

The SHEF50/100 features a heavy-duty cast iron construction that provides durability for a long service life, as well as dissipating heat from the motor for cooler operation. All fasteners are stainless steel for corrosion resistance. The pump's semiopen, nonclog design impeller passes 3/4" (spherical) solids and is made from a super tough engineered plastic that provides the highest level of corrosion resistance and the toughness to withstand the impact of solid materials. The impeller, molded to a bronze insert, also features pump-out vanes to preclude material from building up around the shaft and seal. The pump's unique (patent pending) nonclog design baseplate has an electrostatically applied polyester coating for corrosion resistance and provides a strainer-free inlet capable of passing two (2), 3/4" (spherical) solids simultaneously. The inlet area is raised off the bottom of the septic tank or sump basin by the pump's 2" high legs constructed of engineered thermoplastic material for maximum corrosion resistance.

The SHEF50/100's oil-filled motor provides superior cooling characteristics, allowing the motor to run cool and quiet. The oil-filled design also provides permanent lubrication of the shaft bearings, minimizing maintenance and extending the service life of the pump. The oil-filled motor design allows for even heat dissipation. On single phase models the windings feature a built-in thermal overload that resets automatically.

Automatic models feature an easily adjustable wide-angle float switch, incorporating a unique piggyback plug arrangement. This plug allows for simple conversion to manual operation by simply removing the switch plug and inserting the pump's motor plug into the electrical outlet. This feature provides an easy way of periodically cycling the pump to ensure it is operating properly.

SHEF50/100

The SHEF50/100 are completely submersible "high head" pumps for use in residential septic tank effluent pumping applications and are available in automatic and manual configuration. Automatic models feature a wide-angle float switch with piggyback plug-in arrangements. Switch is adjustable, easy to service and allows for simple conversion to manual operations.

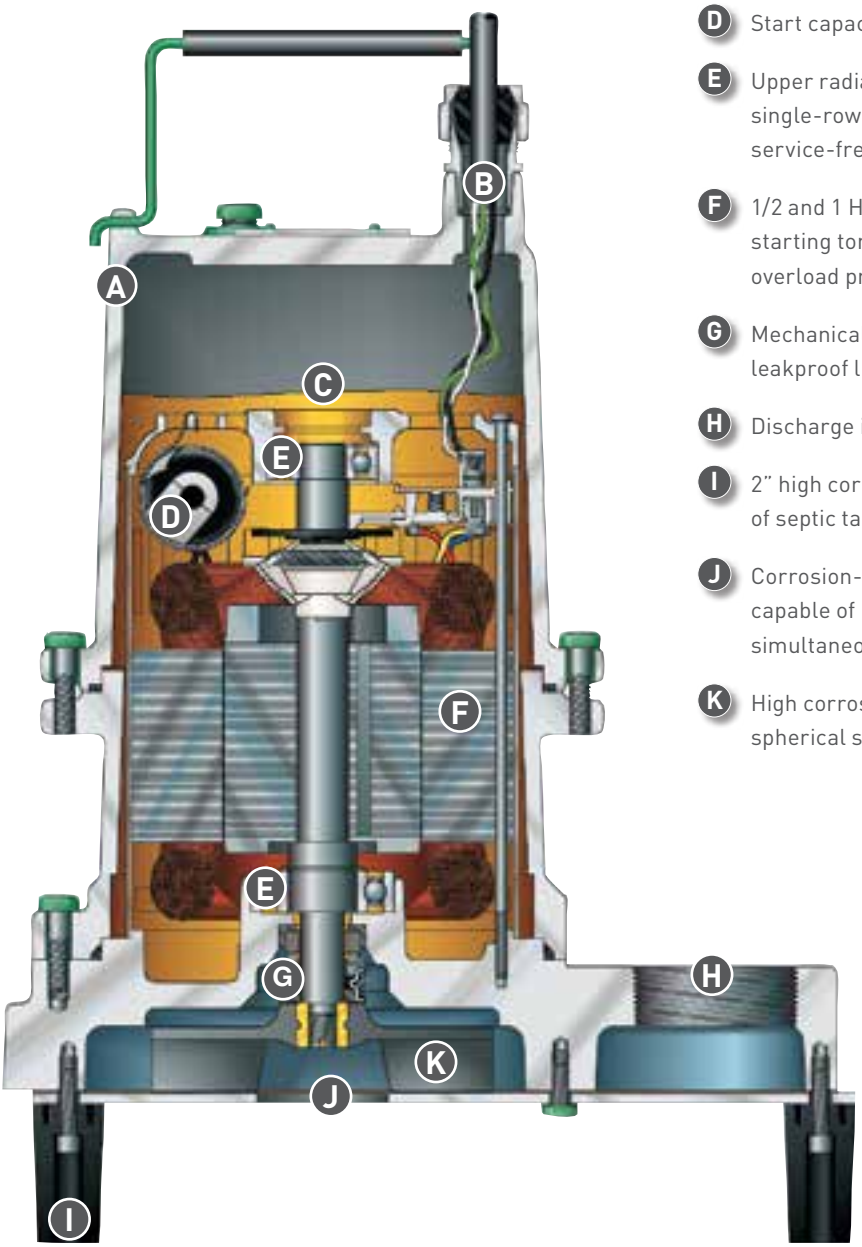

- **A** High quality cast iron construction of pump volute, motor housing and seal housing provides long life.
- **B** Water resistant power cord has a compression fit connection and an epoxy potting for double protection against water entry. Lengths of 20 and 30 feet are available with molded plugs, depending on model variations.
- **C** Oil-filled motor provides superior cooling and permanent lubrication of bearings, minimizing maintenance and extending service life.
- **D** Start capacitor 1ø models only.
- **E** Upper radial- and lower thrust bearings are heavy-duty, single-row ball bearings that are permanently lubricated for service-free life.
- **F** 1/2 and 1 HP capacitor-start (1ø) motors provide maximum starting torque. Motor windings contain automatic thermal overload protection (1ø).
- **G** Mechanical shaft seal is carbon and ceramic-faced for long leakproof life.
- **H** Discharge is standard 2" NPT.
- **I** 2" high corrosion-resistant legs raise pump's inlet from bottom of septic tank pump chamber.
- **J** Corrosion-resistant, nonclog base with strainer-free inlet capable of passing two (2), 3/4" diameter spherical solids simultaneously.
- **K** High corrosion-resistant, nonclog impeller passes two (2), 3/4" spherical solids.

SHEF50/100

PUMP CHARACTERISTICS

Pump/Motor Unit	Submersible				
Manual Models (50)	M1	M2	M3	M4	M5
Automatic Models	A1	A2	-	-	-
Horsepower	1/2				
Full Load Amps	14.5	7.6/7.1	3.2/3.1	1.6	1.2
Motor Type	Capacitor Start				
R.P.M.	3450				
Phase Ø	1 Ø		3 Ø		
Voltage	115	208-230	208-230	460	575
Manual Models (100)		M2	M3	M4	M5
Automatic Models		A2	-	-	-
Horsepower	1				
Full Load Amps	13.6/12.1		6.0/5.8	2.8	1.9
Motor Type	Capacitor Start		3 Ø		
R.P.M.	3450				
Phase Ø	1 Ø		3 Ø		
Voltage	208-230		208-230	460	575
Hertz	60				
Temperature	140°F Max Fluid Temp.				
NEMA Design	L		B		
Insulation	Class B				
Discharge Size	2" NPT std.				
Solids Handling	3/4"				
Unit Weight	58 lbs. (50)		65 lbs. (100)		
Power Cord	115V, 14/3, SJTW-A; 230V, 1ø, 16/3 SWT-A; 3ø, 16/4, STW-A, All cords 20' std. with 30' opt.				

MATERIALS OF CONSTRUCTION

Handle	Stainless Steel
Lubricating Oil	Dielectric Oil
Motor Housing	Cast Iron
Pump Casing	Cast Iron
Shaft	Stainless Steel
Mechanical Shaft Seal	Seal Faces: Carbon/Ceramic Seal Body: Brass Spring: Stainless Steel Bellows: Buna-N
Impeller	Engineered Thermoplastic
Upper Bearing	Single Row Ball Bearing
Lower Bearing	Single Row Ball Bearing
Bottom Plate	Single Row Ball Bearing
Fasteners	Stainless Steel
Legs	Engineered Thermoplastic

PERFORMANCE DATA

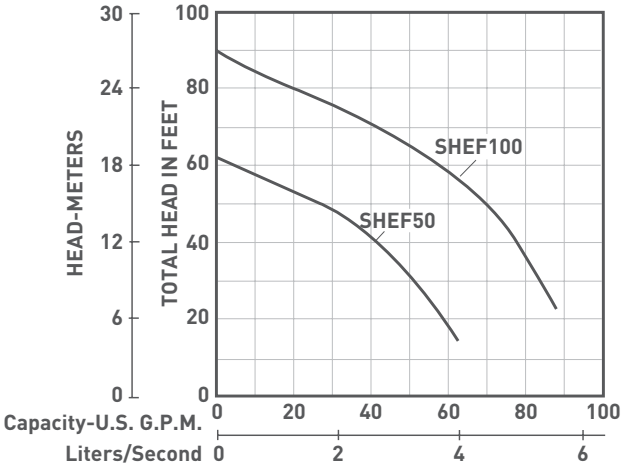

DIMENSIONAL DATA

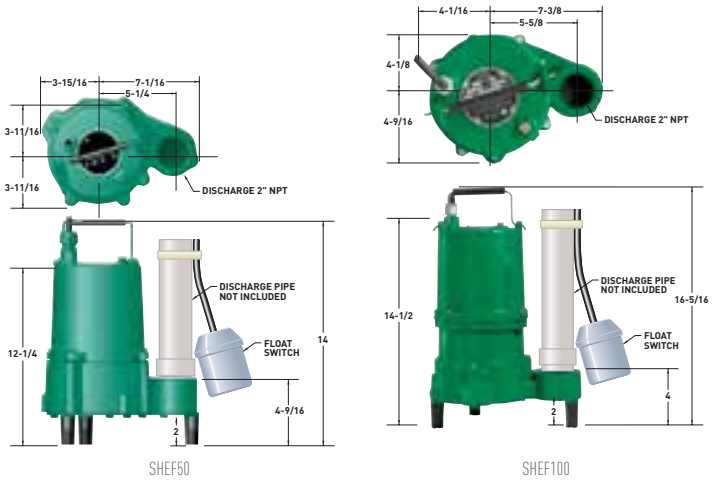

All dimensions in inches. Metric for international use. Component dimensions may vary ± 1/8 inch.
Dimensional data not for construction purpose unless certified. Dimensions and weights are approximate.
On/Off level adjustable.

PENTAIR

USA
293 WRIGHT STREET, DELAVAN, WI 53115 WWW.HYDROMATIC.COM
PH: 888-957-8677 ORDERS FAX: 800-426-9446

CANADA
269 TRILLIUM DRIVE, KITCHENER, ONTARIO, CANADA N2G 4W5
PH: 519-896-2163 ORDERS FAX: 519-896-6337

Because we are continuously improving our products and services, Pentair reserves the right to change specifications without prior notice.

© 2012 Pentair Ltd. All Rights Reserved.

W-02-6370 (11/21/12)

CIVIL ENGINEERING ASSOCIATES, INC.
10 Mansfield View Lane
South Burlington, VT 05403
Phone: 802-864-2323
Fax: 802-864-2271
E-Mail: mail@cea-vt.com

STATE OF VERMONT
DAVID S. MARSHALL
No. 6019
CIVIL
REGISTERED
PROFESSIONAL ENGINEER

Hydrogeologic Study
Tiller Wastewater Disposal System
September 28, 2015

The proposed mound type wastewater disposal system has a design disposal capacity of 560 gallons per day in support of a 5-bedroom single family home. As the applicant has proposed to recognize the varying slopes and soil types within the design area, a hydro study is required to be completed.

Existing Conditions

The existing site is generally comprised of a compact gravelly loam overlain by a fine sandy loam. Test pitting information is depicted on Sheet C2.1 and is based on the work completed Civil Engineering Associates in November, 2013 and witnessed by Mr. Spencer Harris.

Depths to seasonal high groundwater vary within the site and are generally summarized below.

Under Trench	25" to 27" with ledge at 26" on the east send.
Toe of Fill	14" to 19"
25' below Toe	14"

The hydraulic gradients, based upon the SHGWT elevations generally are summarized as follows:

From trench to Toe	0.24% (west end) 2.4% (east end)
From Toe to 25-ft	6.3% (west end) 5.9% (east end)

The existing surface grade and interpreted SHGHT elevation (highlighted in yellow) have been added to the attached site plan mark-up of the system area (one over the other). The estimate SGWT elevation contours are shown in blue. The calculated slopes are also shown on the plan as arrows with the noted elevation delta over the distance and resulting gradient (highlighted with green)

Design Requirements

The proposed disposal trench will receive standard settled effluent from a 1,000 gallon septic tank.

The proposed layout of the system calls for the construction of one 6.3 foot wide x 90-foot long disposal bed. Based on a standard loading rate of 1 gallon per day per

square foot for settled effluent, this equates into a maximum linear loading rate of 6.22 GPD/LF.

The minimum required separation distance to the seasonal high groundwater table from the bottom of the disposal trench stone to the mounded groundwater table is 3.0 feet. The Performance Based standards call for an unsaturated thickness of 6" below at the toe of the mound fill and at a point 25-feet downgradient of the toe.

Due to the constraints of the site and the variability of the topography, the seepage bed is laid out on a slight skew from true parallel to the contour. These varying flow characteristics are addressed in the subsequent analysis.

Analysis

The Darcy based table top analysis of the site utilized a hydraulic permeability of 20 feet per day for the non-platy fine sandy loam. This is consistent with the conservative values utilized in the Performance Based approach (see attached soil permeability design table).

The wastewater disposal system was analyzed for compliance on both the west and east ends of the system. This was undertaken as a factor of safety to address the variation in the topography from one side to the other.

Each end of the trench was analyzed to demonstrate compliance with the 3-foot separation distance to the induced groundwater level. The attached site plan shows the estimated seasonal high groundwater elevations assigned for the study area (highlighted yellow).

On the west end under the bed, despite the moderately deep depth to the SHGWT, the resulting hydraulic gradient is fairly flat due to the shallower depth to SHGWT north of this area. The loading of this area will create a mounded effluent condition until there is adequate gradient to move the effluent out from under the system. To simplify the analysis, we have conservatively presumed that the resulting hydraulic gradient will be the same as that on the east end of the site (essentially assigning a SHGWT at TP-27 of 16” instead of the existing 27”.

The application of the effluent across the bed is presumed to be linear and the resulting loading of the mounded effluent is calculated in the analysis accordingly where the linear loading begins at 0.0 GPD/LF at the south end and increases to 6.22 GPD/LF at the north end of the bed.

The existing SHGWT elevations are assigned at both the south and north ends while the reported interior elevation are interpreted.

Based upon the assigned bottom of bed elevation of 162.85 feet (invert = 163.6), the resulting unsaturated thickness due to the effluent mounding is reported. During the design, the bottom of trench elevation is adjusted up to produce the minimum 3.0 foot separation distance or down to minimize the amount of sand required while still satisfying the 3.0 minimum separation distance from the bottom of the trench to the mounded SHGWT.

This exercise is repeated for both the east and west analysis points until all of the separation distance conditions are met.

In determining the compliance at the toe of the system, the west end was found to be the controlling location as the depth to the SHGWT was 14” where the 6” minimum standard was met.

At the point 25-feet downgradient of the system the west end again was more limiting than the east side. Here the 6” unsaturated thickness was provided.

A review of the separation distance to ledge shows that the 26” of unconsolidated materials at Test Pit 22 coupled with the mound sand depth of 33” (bottom of bed elev. 162.85 – 160.2 ex. grade) exceeds the requisite 48” of vertical separation between the trench and ledge.

Summary

The analysis indicates that the proposed mound type system can be sited on this site with the use of a minimum of 33" of mound sand under the bed.

The depth of unsaturated soil at the toe of the system ranges exceeds 6" to 11" which complies with the minimum required 6" depth. The depth of unsaturated soils at the point 25-feet downgradient of the toe meets the 6" minimum standard on both the east and west ends of the system.

Attachments:

- West End Hydrogeologic Analysis
- East End Hydrogeologic Analysis
- Site Plan of Mound System
- Soil Permeability Table

End of Study

Tiller Watsetwater System
362 Holmes Road, Charlotte, Vermont

Site: Mound Disposal Site - East End

Calculation Method: Darcy's Law

Q = KiA x 7.48

where Q = Design Flow, or Hydrogeologic Site Capacity
or Q/ft = Design Flow per Linear Foot
i = Hydraulic Gradient
A = L x h = Cross Sectional Area, Sq. Ft.
7.48 = Conversion from Cu. Ft. to Gallons

Parameter	Assigned Value	Units	Notes:
K	20	ft/day	Value for Very Fine Sandy Loam
i	0.026	ft/ft	Hydraulic Gradient (Slope of Limiting Conditions)
A	1	Ft	Calculate using Linear Loading Rate
Des Q	6.22	gpd/lf	Design Flow - One 8' wide bed at 1 GPD/SF

104.4	Highest Ground Elev. Under Trench	
1.0	Required Min. Sand Depth	
105.4	Lowest Bottom of Trench Elev. Allowed	

Solve for: h = height of induced groundwater mound (IGWM)
h = 1.60 Ft

Trench 1 Calculate Trench Bottom Elevations to Provide 3.0 feet of Unsaturated Thickness Below Trench Bottoms.

Trench No.	Gallons per Day Q/ft	Highest Lim. Cond. Elev. Ft	Add Induced GW Mound, Ft.	Elev. SHGWT Plus IGWM, Ft.	Trench Bottom Elev. Calcs. Inv. Elev.	Below Inv.	Bottom Elev.	Unsat. Thickness Below Trench including Induced Mound, Ft.	Comment
South Edge	0	158.28	0.00	158.3	163.6	0.75	162.85	4.57	Okay,3.0' or Greater
	1.56	158.24	0.40	158.6	163.6	0.75	162.85	4.22	Okay,3.0' or Greater
Middle	3.11	158.19	0.80	159.0	163.6	0.75	162.85	3.86	Okay,3.0' or Greater
	4.67	158.15	1.20	159.3	163.6	0.75	162.85	3.51	Okay,3.0' or Greater
North Edge	6.22	158.10	1.60	159.7	163.6	0.75	162.85	3.15	Okay,3.0' or Greater

Check on Predicted Freeboard at Toe of Mound Below Trench

K	20	ft/day	Value for Very Fine Sandy Loam
i	0.063	ft/ft	Hydraulic Gradient (Slope of Limiting Conditions)
A	1	Ft	Calculate using Linear Loading Rate
Des Q	6.22	gpd/lf	Design Flow - One 8' wide bed at 1 GPD/SF

Solve for: h = height of induced groundwater mound (IGWM)
h = 0.66 Ft

Elev. Toe., Ft.	(B) Depth to SHGWT, Ft.	Lim. Cond. at Toe. Elev., Ft.	(D) Add Induced GW Mound, (ft.)	Elev. SHGWT Plus IGWM, Ft.	Predicted Freeboard (Col B- Col D), Ft.	Comment
159.2	1.17	158.03	0.66	158.7	0.51	Okay, 0.5' or Greater

Check on Predicted Freeboard 25' downgradient of Toe of Mound

K	20	ft/day	Value for Very Fine Sandy Loam
i	0.063	ft/ft	Hydraulic Gradient (Slope of Limiting Conditions)
A	1	Ft	Calculate using Linear Loading Rate
Des Q	6.22	gpd/lf	Design Flow - One 8' wide bed at 1 GPD/SF

Solve for: 25 height of induced groundwater mound (IGWM)
h = 0.66 Ft

Elev. Toe., Ft.	(B) Depth to SHGWT, Ft.	Lim. Cond. at Toe. Elev., Ft.	(D) Add Induced GW Mound, (ft.)	Elev. SHGWT Plus IGWM, Ft.	Predicted Freeboard (Col B- Col D), Ft.	Comment
158.1	1.17	156.93	0.66	157.6	0.51	Okay, 0.5' or Greater

Tiller Property
362 Holmes Road, Charlotte, Vermont

Site: Mound Disposal Trench - East End

Calculation Method: Darcy's Law

Q = KiA x 7.48

where Q = Design Flow, or Hydrogeologic Site Capacity
or Q/ft = Design Flow per Linear Foot
i = Hydraulic Gradient
A = L x h = Cross Sectional Area, Sq. Ft.
7.48 = Conversion from Cu. Ft. to Gallons

Parameter	Assigned Value	Units	Notes:
K	20	ft/day	Value for Very Fine Sandy Loam
i	0.024	ft/ft	Hydraulic Gradient (Slope of Limiting Conditions)
A	1	Ft	Calculate using Linear Loading Rate
Des Q	6.22	gpd/lf	Design Flow - One 8' wide bed at 1 GPD/SF

104.4	Highest Ground Elev. Under Trench	
1.0	Required Min. Sand Depth	
105.4	Lowest Bottom of Trench Elev. Allowed	

Solve for: h = height of induced groundwater mound (IGWM)
h = 1.73 Ft

Trench 1 Calculate Trench Bottom Elevations to Provide 3.0 feet of Unsaturated Thickness Below Trench Bottoms.

Trench No.	Gallons per Day Q/ft	Highest Lim. Cond. Elev. Ft	Add Induced GW Mound, Ft.	Elev. SHGWT Plus IGWM, Ft.	Trench Bottom Elev. Calcs. Inv. Elev.	Below Inv.	Bottom Elev.	Unsat. Thickness Below Trench including Induced Mound, Ft.	Comment
South Edge	0	158.2	0.00	158.2	163.6	0.75	162.85	4.65	Okay,3.0' or Greater
	1.56	158.15	0.43	158.6	163.6	0.75	162.85	4.27	Okay,3.0' or Greater
Middle	3.11	158.10	0.87	159.0	163.6	0.75	162.85	3.88	Okay,3.0' or Greater
	4.67	158.05	1.30	159.3	163.6	0.75	162.85	3.50	Okay,3.0' or Greater
North Edge	6.22	158.00	1.73	159.7	163.6	0.75	162.85	3.12	Okay,3.0' or Greater

Check on Predicted Freeboard at Toe of Mound Below Trench

K	20	ft/day	Value for Very Fine Sandy Loam
i	0.059	ft/ft	Hydraulic Gradient (Slope of Limiting Conditions)
A	1	Ft	Calculate using Linear Loading Rate
Des Q	6.22	gpd/lf	Design Flow - One 8' wide bed at 1 GPD/SF

Solve for: h = height of induced groundwater mound (IGWM)
h = 0.70 Ft

Elev. Toe., Ft.	(B) Depth to SHGWT, Ft.	Lim. Cond. at Toe. Elev., Ft.	(D) Add Induced GW Mound, (ft.)	Elev. SHGWT Plus IGWM, Ft.	Predicted Freeboard (Col B- Col D), Ft.	Comment
159.3	1.6	157.7	0.70	158.4	0.90	Okay, 0.5' or Greater

Check on Predicted Freeboard 25' downgradient of Toe of Mound

K	20	ft/day	Value for Very Fine Sandy Loam
i	0.059	ft/ft	Hydraulic Gradient (Slope of Limiting Conditions)
A	1	Ft	Calculate using Linear Loading Rate
Des Q	6.22	gpd/lf	Design Flow - One 8' wide bed at 1 GPD/SF

Solve for: 25 height of induced groundwater mound (IGWM)
h = 0.70 Ft

Elev. Toe., Ft.	(B) Depth to SHGWT, Ft.	Lim. Cond. at Toe. Elev., Ft.	(D) Add Induced GW Mound, (ft.)	Elev. SHGWT Plus IGWM, Ft.	Predicted Freeboard (Col B- Col D), Ft.	Comment
157.3	1.2	156.1	0.70	156.8	0.50	Okay, 0.5' or Greater

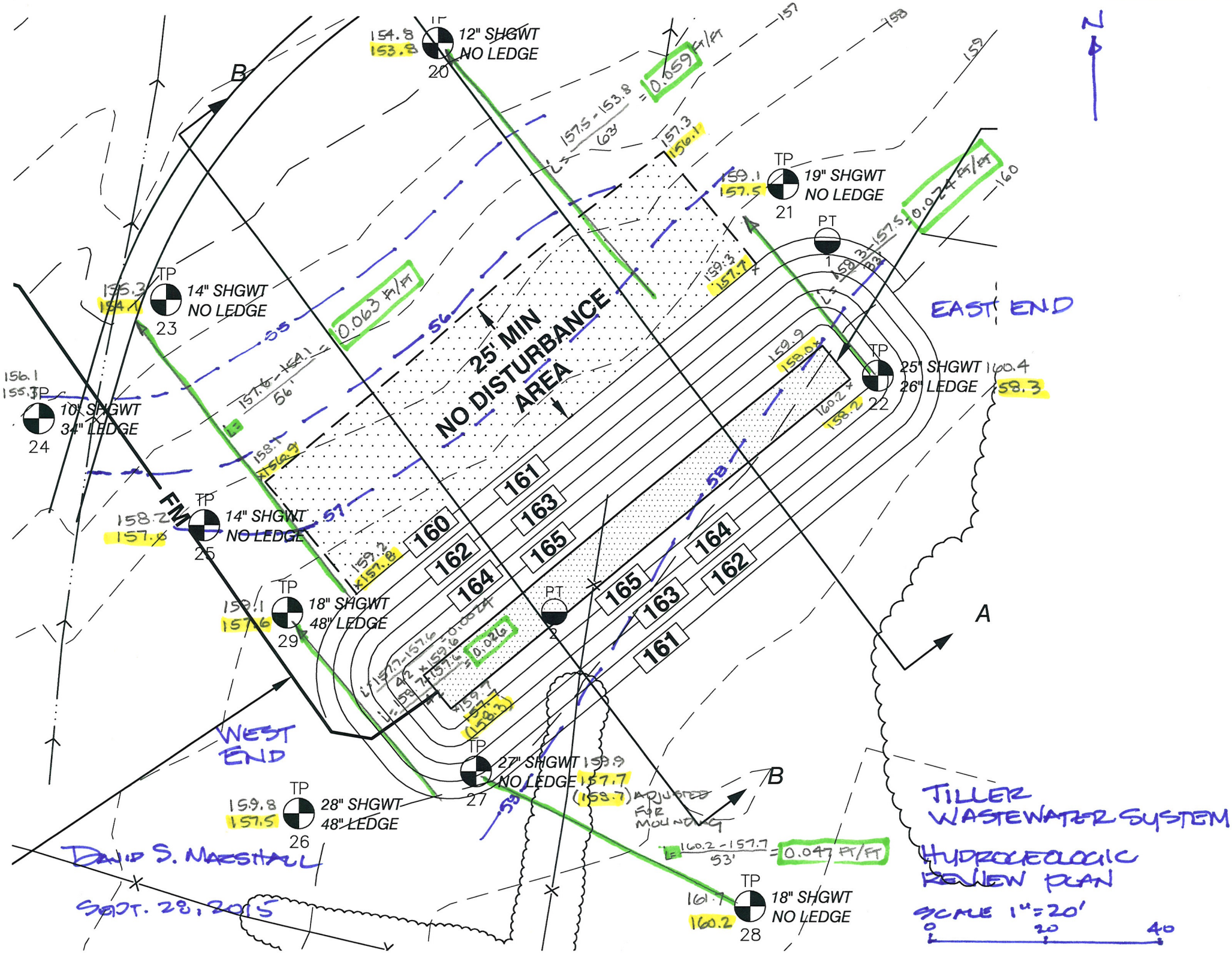
N
B
A
TP 12" SHGWT NO LEDGE 20
154.8
153.8
0.059 FT/FT
157.5 - 153.8 / 63' = 0.059
157.3
156.1
TP 19" SHGWT NO LEDGE 21
159.1
157.5
0.024 FT/FT
PT 1
159.3
157.7
EAST END
TP 14" SHGWT NO LEDGE 23
155.3
154.1
0.063 FT/FT
25' MIN NO DISTURBANCE AREA
TP 25" SHGWT 26" LEDGE 22
160.4
158.3
159.9
158.0
160.2
158.2
TP 10" SHGWT 34" LEDGE 24
156.1
155.1
157.6 - 154.1 / 56'
158.1
156.9
FM
TP 14" SHGWT NO LEDGE 25
158.2
157.6
159.2
157.8
TP 18" SHGWT 48" LEDGE 29
159.1
157.6
PT 2
0.026
157.7 - 157.6 / 42' = 0.024
159.7
157.7
(158.3)
TP 27" SHGWT NO LEDGE 27
159.9
157.7
(158.7) ADJUSTED FOR MOUNDING
WEST END
TP 28" SHGWT 48" LEDGE 26
159.8
157.5
TP 18" SHGWT NO LEDGE 28
161.7
160.2
160.2 - 157.7 / 53' = 0.047 FT/FT
161
163
165
164
162
160
55
56
57
58
59
157
158
159
160
DAVID S. MARSHALL
SEPT. 28, 2015
TILLER WASTEWATER SYSTEM
HYDROGEOLOGIC REVIEW PLAN
SCALE 1" = 20'
0
20
40

Table 1. Hydraulic Loading Method for Detailed Soil Descriptions in Vermont (2003)

				Hydraulic Loading Rate (gpd/square foot)							
				(Sorted by hydraulic gradient and % ground surface slope range as noted) based on midpoint of slope range							
Soil Texture[1]	Soil Structure[2]		K[3]	0.01	0.03	0.05	0.07	0.09	0.125	0.175	0.25
	Shape	Grade	(ft/day)	0-2%	2.1-4%	4.1-6%	6.1-8%	8.1-10%	10.1-15%	15.1-20%	20.1-30%
Coarse Sand, Sand, (1)		0SG	100	7.5	22.4	37.4	52.4	67.3	93.5	130.9	187.0
Loamy Coarse Sand, Loamy Sand											
Fine Sand, Very Fine Sand, (2)	--	0SG	50	3.7	11.2	18.7	26.2	33.7	46.8	65.5	93.5
Loamy Fine Sand, Loamy Very Fine Sand											
Coarse Sandy Loam, Loamy Sand											
	--	0M	50	3.7	11.2	18.7	26.2	33.7	46.8	65.5	93.5
	PL	1	25	1.9	5.6	9.4	13.1	16.8	23.4	32.7	46.8
	PL	2,3	25	1.9	5.6	9.4	13.1	16.8	23.4	32.7	46.8
	PR/BK/GR	1	40	3.0	9.0	15.0	20.9	26.9	37.4	52.4	74.8
	PR/BK/GR	2,3	50	3.7	11.2	18.7	26.2	33.7	46.8	65.5	93.5
(3) Fine Sandy Loam, Very Fine Sandy Loam	--	0M	10	0.7	2.2	3.7	5.2	6.7	9.4	13.1	18.7
	PL	1,2,3	10	0.7	2.2	3.7	5.2	6.7	9.4	13.1	18.7
	PR/BK/GR	1	20	1.5	4.5	7.5	10.5	13.5	18.7	26.2	37.4
	PR/BK/GR	2,3	30	2.2	6.7	11.2	15.7	20.2	28.1	39.3	56.1
(4) Loam	--	0M	10	0.7	2.2	3.7	5.2	6.7	9.4	13.1	18.7
	PL	1,2,3	10	0.7	2.2	3.7	5.2	6.7	9.4	13.1	18.7
	PR/BK/GR	1	15	1.1	3.4	5.6	7.9	10.1	14.0	19.6	28.1
	PR/BK/GR	2,3	20	1.5	4.5	7.5	10.5	13.5	18.7	26.2	37.4
(5) Silt Loam	--	0M	10	0.7	2.2	3.7	5.2	6.7	9.4	13.1	18.7
	PL	1,2,3	5	0.4	1.1	1.9	2.6	3.4	4.7	6.5	9.4
	PR/BK/GR	1	10	0.7	2.2	3.7	5.2	6.7	9.4	13.1	18.7
	PR/BK/GR	2,3	20	1.5	4.5	7.5	10.5	13.5	18.7	26.2	37.4
(6) Sandy Clay Loam, Clay Loam, Silty Clay Loam	--	0M	5	0.4	1.1	1.9	2.6	3.4	4.7	6.5	9.4
	PL	1,2,3	5	0.4	1.1	1.9	2.6	3.4	4.7	6.5	9.4
	PR/BK/GR	1	8	0.6	1.8	3.0	4.2	5.4	7.5	10.5	15.0
	PR/BK/GR	2,3	10	0.7	2.2	3.7	5.2	6.7	9.4	13.1	18.7
(7) Sandy Clay, Clay, Silty Clay	--	0M	3	0.2	0.7	1.1	1.6	2.0	2.8	3.9	5.6
	PL	1,2,3	3	0.2	0.7	1.1	1.6	2.0	2.8	3.9	5.6
	PR/BK/GR	1	5	0.4	1.1	1.9	2.6	3.4	4.7	6.5	9.4
	PR/BK/GR	2,3	10	0.7	2.2	3.7	5.2	6.7	9.4	13.1	18.7

Note: 1. Soil texture and structure columns are based on Tyler and Kuns (2000).
2. Structure Abbreviations: Shapes: PL = platy; BK = blocky; PR = prismatic; GR = granular
Grade: 0 = structureless; SG = single grain; M = massive; 1 = weak; 2 = moderate; 3 = strong
3. K = hydraulic conductivity (estimated)

VT DEC, 2003.