FORCE MAINS INSPECTION AND TESTING

A. The Contractor shall perform and the new force mains shall pass a high pressure water test witnessed by the Engineer prior to acceptance of the force mains.

B. The high pressure water test shall be performed as follows:

1. After the force main pipe and fitting installations have been completed, the contractor shall proceed, in the presence of the engineer, to test the installation. Testing performed shall involve both hydrostatic pressure and leakage tests.

2. Testing procedures shall be in accordance with the Environmental Protection Rules. General details are as follows.

3. Sufficient backfill should be placed prior to filling pipe with water and field testing to prevent shifting of the pipe due to internal test pressures. The trenches should be backfilled immediately after the pipe has been laid since exposed pipe is subject to damage from falling heavy objects as well as subject to floatation from water inadvertently entering the trench. Testing should be carried out after backfilling has been completed, but before placement of permanent surface.

4. Each section of the pipeline should be slowly filled with water and all air expelled at high points. The 50 p.s.i. test pressure is then applied by means of a pump connected to the pipe in a manner satisfactory to the engineer. Test pressure must be maintained by additional pumping, if necessary for the two hour test, during which the amount of leakage is determined by measuring the amount of additional water pumped into the line. All defective elements must be repaired or removed and replaced, and the test repeated until the pipeline withstands the pressure and the allowable leakage requirements have been met. The allowable leakage is calculated as follows:

$$L = (SxDxJP)/133200$$ WHERE; L = NUMBER OF GALS. ALLOWED LEAKAGE PER HOUR, S = LENGTH OF PIPE TESTED IN FEET, D = INCHES OF PIPE DIAMETER, P = AVERAGE TEST PRESSURE (PSI GAUGE).

SEWER TANKS INSPECTION AND TESTING

A. Leakage tests shall be performed by the Contractor and observed by the Engineer on each precast concrete tank. The test shall be an exfiltration test, infiltration test or vacuum test as described below.

B. After the tank has been assembled in place, all lifting holes shall be filled and pointed with an approved nonshrinking mortar as well as those exterior joints within 6 feet of the ground surface. The test shall be made prior to placing the shelf and invert (if required). If the groundwater table has been allowed to rise above the bottom of the tank, it shall be lowered for the duration of the test. All pipes and other openings into the tank shall be suitably plugged and plugs braced to prevent blowout.

C. EXFILTRATION TEST

1. The tank shall be filled with water to the top of the cone section. If the excavation has not been backfilled and observation indicates no visible leakage, that is, no water visibly moving down the surface of the tank, then, the tank may be considered to be satisfactorily water–tight.

2. If the test as described above is unsatisfactory as determined by the Engineer or if the tank excavation has been backfilled, the test shall be continued. A period of time (4 hours) may be permitted if the Contractor wishes, to allow for absorption. At the end of this period, the tank shall be refilled to the top, and the measuring time of at least 8 hours begun. At the end of the test period, the tank shall be refilled to the top; measuring the volume of water added. This amount shall be extrapolated to a 24–hour rate and the leakage determined on the basis of depth. The leakage for each tank shall not exceed 1 gallon per 15.7 square feet of submerged surface area for a 24 hour period. If the test fails this requirement, but the leakage does not exceed 3 gallons per 15.7 square feet per day, repairs by approved methods may be made as directed by the Engineer to bring the leakage within the allowable rate of 1 gallon per 15.7 square feet per day. Leakage due to a defective section of joint or exceeding the 3 gallon per 15.7 square feet per day, shall be cause for the rejection of the tank. It shall be the Contractor's responsibility to uncover the tank as necessary and to disassemble, reconstruct or replace it as directed by the Engineer. The tank shall then be retested. The Engineer may require that an approved, nontoxic dye be added to the water for testing purposes.

3. The exfiltration test may be conducted either before or after backfilling around the tank. However, if the Contractor elects to backfill prior to testing, it shall be at his own risk and it shall be incumbent upon the Contractor to determine the reason for any failure of the test. No adjustment in the leakage allowance will be made for unknown causes such as leaking plugs, absorption, etc., i.e., it will be assumed that all loss of water during the test is a result of leaks through the joints or through the concrete. Furthermore, the Contractor shall take any steps necessary to assure the Engineer that the water table is below the bottom of the tank throughout the test.

D. INFILTRATION TEST

If the groundwater table is above the highest joint in the tank, and if there is no leakage into the tank as determined by the Engineer, such a test can be used to evaluate the watertightness of the tank. However, if the Engineer is not satisfied, the Contractor shall lower the water table and carry out the exfiltration or vacuum test as described herein.

E. VACUUM TEST

1. The Contractor shall plug the pipe openings and place the vacuum testing apparatus in the tank using a 60 inch/lb torque to tighten the external clamps. The compression band shall then be inflated to seal the vacuum base. The vacuum pump shall be connected to the outlet port of the base with the valve open. A vacuum of 10" of Hg. shall be drawn. The valve shall then be closed.

2. The test shall pass if the vacuum remains at 10" Hg. or drops to 9" Hg. in a time greater than two minutes. If the tank fails the initial test, the Contractor shall locate the leak and make the proper repairs. Leaks may be filled with a wet slurry of quick setting material as approved by the Engineer.

3. The vacuum test shall not be an acceptable method for tanks backfilled with nongranular material.

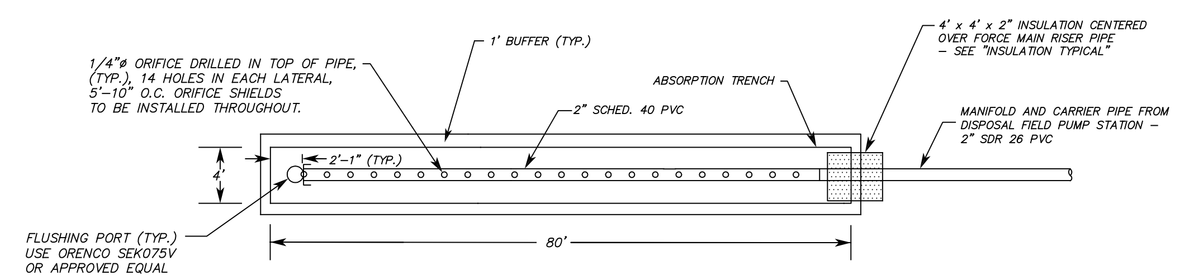

MOUND TRENCH PIPING DIAGRAM

N.T.S.

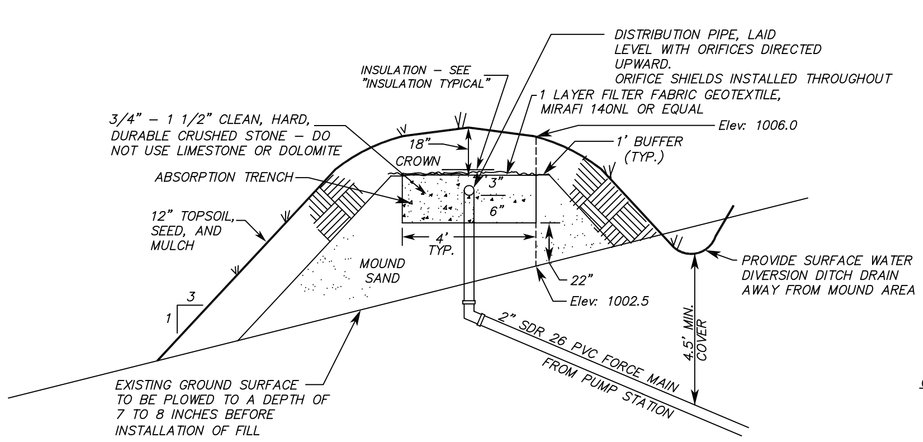

MOUND SAND

(Typ.)

Sieve #	% Passing
No. 10	85 –100%
No. 40	25 – 75%
No. 60	0 – 30%
No. 100	0 – 10%
No. 200	0 – 5%

OR	Sieve #	% Passing
	No. 4	95 –100%
	No. 8	80 –100%
	No. 16	50 – 85%
	No. 30	25 – 60%
	No. 50	10 – 30%
	No. 100	2 – 10%

OR	Sieve #	% Passing
	No. 10	85 –100%
	No. 40	30 – 50%
	No. 200	0 – 10%

MOUND CROSS-SECTION TYPICAL

N.T.S.

Darcy's Law Study of Potential Groundwater Mounding

Location: "213 Ferry Road, Charlotte"

System Length (L) =	80	ft	
Design Flow (Q) =	280	gpd	
Linear Loading Rate	3.5	gpd/ft	
Hydraulic Conductivity (K) =	20	ft/day	From "Hydraulic Loading Method for Detailed Soil Descriptions in Vermont". Silt Loam.
Hydraulic gradient (J) =	0.0380	ft/ft	From measurement of ground slope from upper trench to toe of mound
Limiting layer depth (b) =	14	inches	Based on min. depth to SHWT from test pit data. For mound system, measured from ground surface
Allowable depth to SHWT (Dc) =	6	inches	1–502 (d) (B)

Height of groundwater mound above limiting layer:
$H = [(Q/7.48\ gal/ft.3) / (J \times K \times L)] \times 12\ in/ft =$ 7.4 inches

Resulting depth to groundwater mound below bottom of stone:
$Dw = b - H =$ 6.6 inches

Available Capacity:
$Q = J \times K \times (b - Dc) \times 12\ in/ft \times L \times 7.48\ ft.3/gal =$ 303 gpd

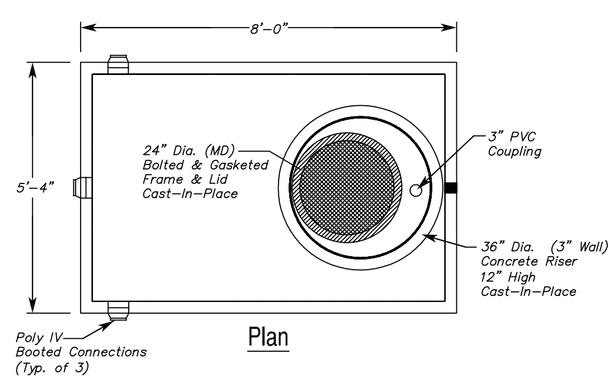

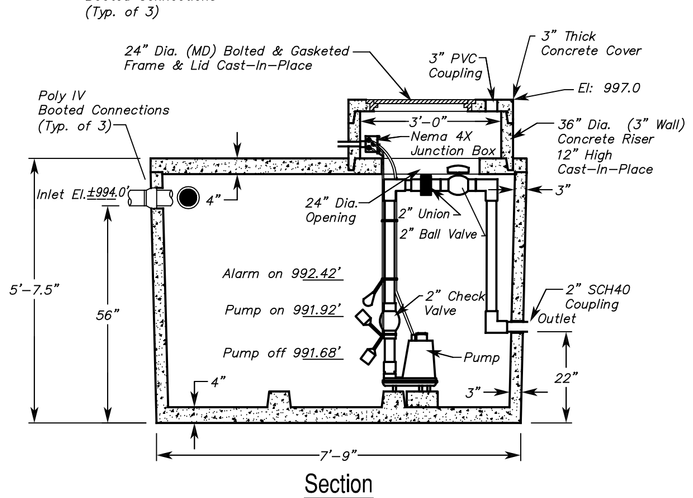

PRECAST PUMPSTATION STANDARD 1000 GALLON (1000PS)

SPECIFICATIONS:
– Concrete Minimum Strength 5000psi @ 28 days
– Steel Reinforcement Grade 60
– Poly IV Booted Connections
– Tap Seam Construction
– Weights Subject to Variation

- Pump Station Alarm To Be Set To Provide 1 Day Emergency Storage Below Inlet Elevation
- Camp Precast Single Compartment Standard Tank Shown With Dimensions Providing 260 Gallons/Vertical Foot
- Contact Design Engineer For Use Of Equivalents
- Design To Be In Accordance With State Of Vermont Environmental Protection Rules

CONSTRUCTION PROCEDURES

Mound System

1. PRIOR TO ANY CONSTRUCTION, the owner shall notify the Design Engineer to stake out the area to be plowed and arrange for a meeting on–site with the Contractor to discuss construction procedures. Construction is to take place between April 1st and December 1st, provided there is no frost in the ground.

2. Remove all aboveground vegetation. Cut trees to the surface. DO NOT remove stumps. Prior to plowing, provide for diversion of surface water runoff from the mound area. Install delivery pipe to designed location and depth from pump station to point in mound where it connects to lateral.

3. When the area is sufficiently dry, plow the entire area to be covered by the mound fill using a mold board plow, plowing parallel with the ground contours with the plow throwing soil uphill. Plow the maximum depth capable of the plow (7 to 8 inches), using as large a plow as possible to reduce the number of driven furrows which result in compaction of the subsoil. Be sure not to track on the plowed surface. Note: Plow soil only when the moisture content is low to avoid compaction and puddling. If a fragment of soil occurring approximately 9 inches below the surface can be easily rolled into a wire, the soil should not be plowed since the moisture content is too high. If, on the other hand, the soil is friable or dry and falls apart when rolling it into a wire, the soil can be plowed because the danger of causing compaction and puddling is minimal. Once compaction and puddling occurs, it reduces the ability of soil to accept water, thus increasing the chance of failure. Once plowing is complete, keep all vehicular traffic off the plowed area. Try to avoid the occurrence of a long period between plowing and construction. If it rains after plowing is completed, wait until the soil dries out before the start of filling operations. Immediate construction after plowing is highly preferable. Once the plowing is complete, the person constructing the system shall contact the Design Engineer for inspection of the site prior to placement of the fill.

4. Place the medium textured soil around the edge of the plowed area by dumping it on the plowed area, keeping the wheels of the dump truck off the plowed area. Percent of soil passing specified sieves shall be as noted below:

Sieve #	% Passing
No. 10	85 – 100%
No. 40	25 – 75%
No. 60	0 – 30%
No. 100	0 – 10%
No. 200	0 – 5%

The design engineer is to be supplied with a sieve analysis of the soil prior to placement.

5. Using a crawler tractor with a blade, move the sand around into place. Try to keep at least 6" of sand under the tracks to minimize compaction of the plowed layer.

6. Install and grade all the sand needed in the mound to the top of the trench. Shape the sides to the required slopes.

7. With the blade of the crawler, form the trench by moving along the length of the mound. The sand walls should stay sufficiently stable. Make sure the bottom of the trench is level. Some hand shovel leveling will be required.

8. Using a bucket on the crawler, dump the stone in the trench by traveling up the side slope. Level the stone off to the desired elevation.

9. At the location of the distribution pipe make a channel about 4" deep by using a shovel. Lay the distribution pipe in the stone taking care to lay it level with holes pointing upward. Install orifice shields over holes. Remove dips and rises which occur in the pipe. Place 2" of stone over the distribution pipe; connect delivery pipe from pump station to riser, and install the riser insulation.

10. Construct sewer line appurtenances.

11. Connect force main appurtenances and test system with clean water to insure that flow from any two holes does not differ by more than 10%. Notify engineer 24 hours prior to back filling and testing, so the system can be inspected and the testing observed by the Engineer. Some pipe sizes may need to be changed and the system rechecked until proper distribution pressure and uniformity is achieved.

12. Place filter fabric over the top of the trench.

13. Place 12" to 18" of soil over the top and sides of the fill material, and over additional area around the base of the mound, the top 4" being a topsoil able to grow grass. Shape the mound surface so there will be no standing water and surface water will drain off and away from the mound.

14. Immediately upon completion of final grading and prior to October 15th, landscape the mound by seeding the surface with grass seed as follows:

Mixture for Non–Manicured Areas	Mixture for Manicured Areas	
Birds foot Trefoil 90%	Bluegrass	60%
Timothy – 10%	Creeping Red Fescue	30%
	Annual Rye	10%

Do not place shrubs directly on top of the mound, as roots may interfere with the distribution system. Mow area annually. If system is completed after October 15th or before May 1st temporarily seed with Annual Rye Grass and mulch. After May 1st install permanent seed mixture.

BASIS OF DESIGN

Design Flows:
4BR House = 140 gpd/BR x 2 BR = 280 gpd

Septic Tank:
System shall use a 1,000 gallon (minimum) nominal capacity precast concrete septic tank, with baffles and effluent filter and set level. Install risers to grade for access ports. Installation of a garbage grinder/disposal in the house is not recommended, but if installed, the septic tank capacity shall be a minimum of 2,000 gallons. Do not backflush water treatment systems into septic tanks, or any other part of the wastewater disposal system. Check septic tank annually for solids accumulation and pump at least every 3 years.

Primary Mound System:

Use performance based mound disposal system designed to fit 14" to SHWT.
Design based on percolation rate of 22 min./in.
Max. application rate = 1.0 gpd/sf
280 gpd / (1.0 gpd/sf) = 280 sf
K= 20 ft./day
Use one infiltration trench, 4' wide x 80' long, providing 320 sf.
Min. effective Basal Area = 280 gpd/.74 gpd/sf = 378.4 sf (±1,300 sf. provided)

Orifice spacing:
Orifice spacing to provide a minimum of one opening per 25 SF of leach field area.
Use 1/4" dia. orifices spaced 5'–10" o.c., and 2'–1" from each end, in 2" diameter lateral for a total of 14 orifices.
Flow from the furthest orifice = 1.73 gpm.

Pressure distribution:
Dosing:
Minimum dose volume = 5 x volume distribution system
= 5 x 13.0 Gallons = 65.0 gallons
Minimum of 4 doses per day
280 gpd / (4 doses/day) = 70.0 gallons per dose maximum
Use:
280 gpd / (66.0 gal/dose) = 4.2 doses/day

Discharge Rate:
Maintain 1.5 psi minimum distribution pressure.
Also, a minimum cleansing velocity in force main of 2.0 fps,
2.0 fps = 19.6 gpm minimum in 2" SCH 40 PVC.

Pump Station:
Pump Design:
Must provide 1 days (280 gallons) minimum emergency storage above alarm elevation
Elevation Head = 13.2 ft
Force Main Friction = 5.0 ft
Miscellaneous Head Losses and End Pressure = 5.0 ft
Total Dynamic Head (TDH) = 24.7 ft
Total Flow Rate = 24.4 gpm
Pump Required: Use Orenco Model PFEF40–B effluent pump, or equal
Orenco A–Series Simplex Alarm/Control Panel, or equal, to be located in house.

SURVEY	SUMMIT ENGINEERING, INC Engineers • Surveyors • Planners • Landscape Architects 1233 Shelburne Road C2 South Burlington, VT 05403 (802) 658–5588	WASTEWATER DETAILS	DATE 1/4/16
DESIGNED		SHIRLEY BRUCE	DRAWING NO. D1
DRAWN		213 FERRY ROAD CHARLOTTE, VERMONT	PROJECT NO. 8328
CHECKED			
SCALE AS SHOWN			

©