Y:\3452-22\Maps\EXISTING CONDITIONS\MackFarm_ExistingConditionsMap.mxd

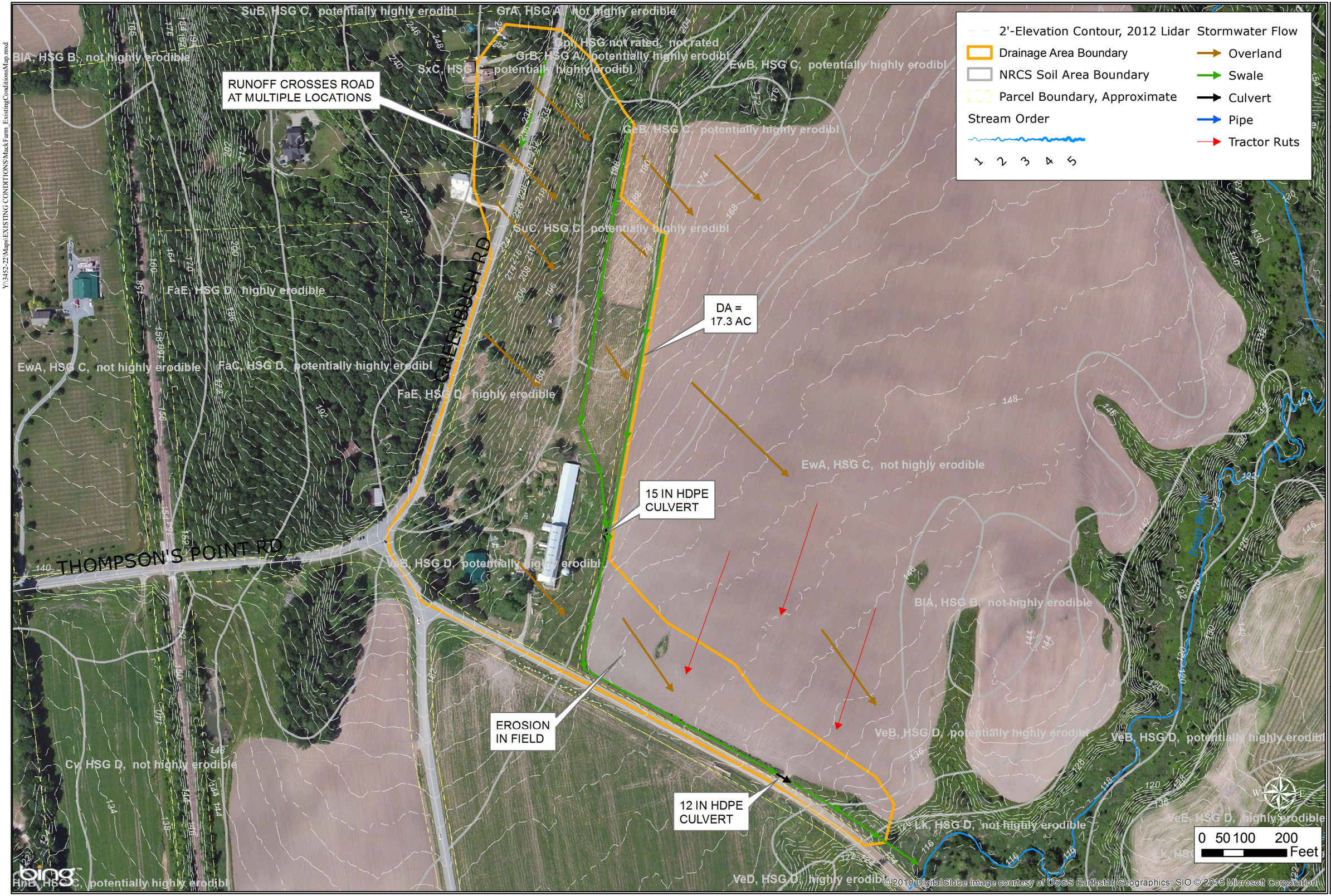

MILONE & MACBROOM
1 South Main Street, 2nd Floor
Waterbury, Vermont 05676
(802) 882-8335 Fax (802) 882-8346
www.miloneandmacbroom.com

SOURCE(S):
2012 LIDAR 2 FT CONTOURS, VCGI
NRCS SOIL MAPPING
MMI FIELD DATA

EXISTING CONDITIONS - MACK FARM

AHEAD OF THE STORM
EAST THOMPSON POINT ROAD
CHARLOTTE, VERMONT

Map By: JCL
MMI#: 3452-22
MXD:
1st Version: 12/23/2015
Revision:
Scale: 1"=200'

FIGURE 1

Y:\3452-22\Maps\CONCEPT DESIGN\MackFarm_LAYOUT.mxd

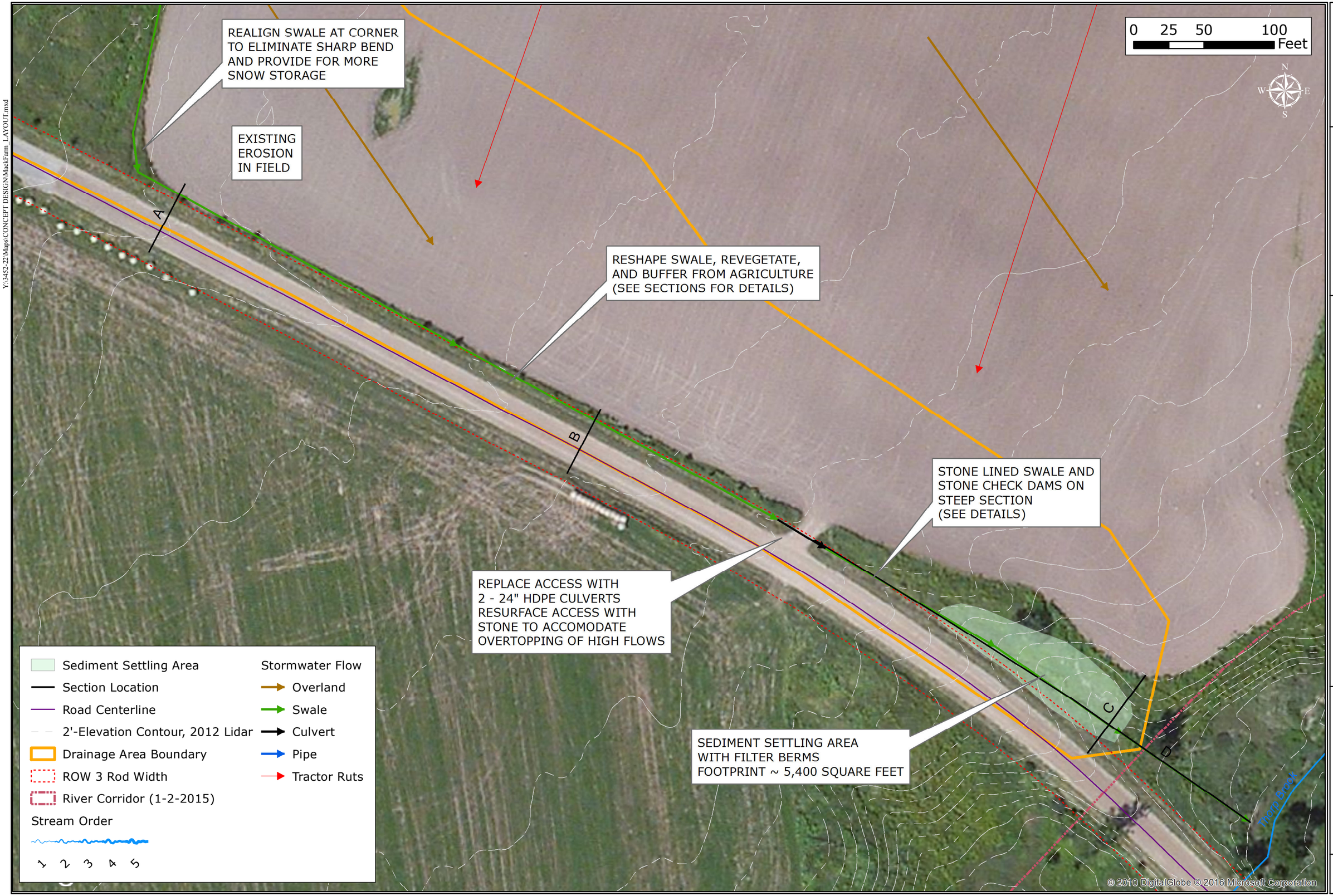

MILONE & MACBROOM
1 South Main Street, 2nd Floor
Waterbury, Vermont 05676
(802) 882-8335 Fax (802) 882-8346
www.miloneandmacbroom.com

SOURCE(S):

2012 LIDAR 2 FT CONTOURS, VCGI
VCGI 2013 15 CM CHITTENDEN COUNTY IMAGERY
MMI FIELD DATA

LAYOUT

AHEAD OF THE STORM
THORP BROOK HEADWATERS RESTORATION

EAST THOMPSON POINT ROAD
CHARLOTTE, VERMONT

DRAFT CONCEPT DESIGN

Map By: JCL
MMI#: 3452-22
MXD:
1st Version: 3/22/2016
Revision:
Scale: 1"=60'

02

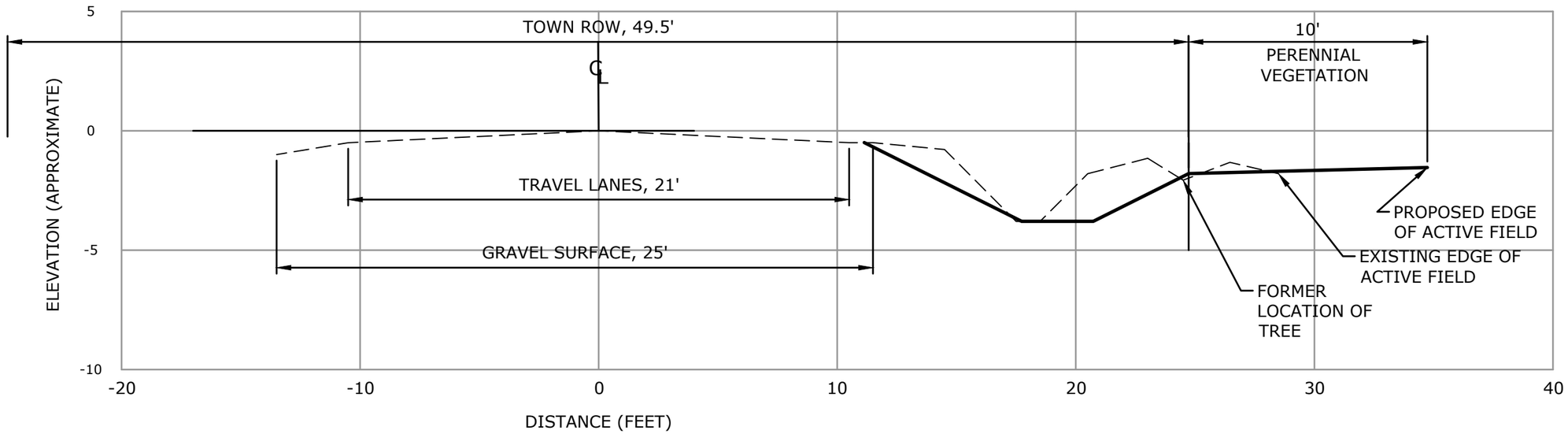

ROAD CROSS SECTION - A

SCALE: 1"=5'

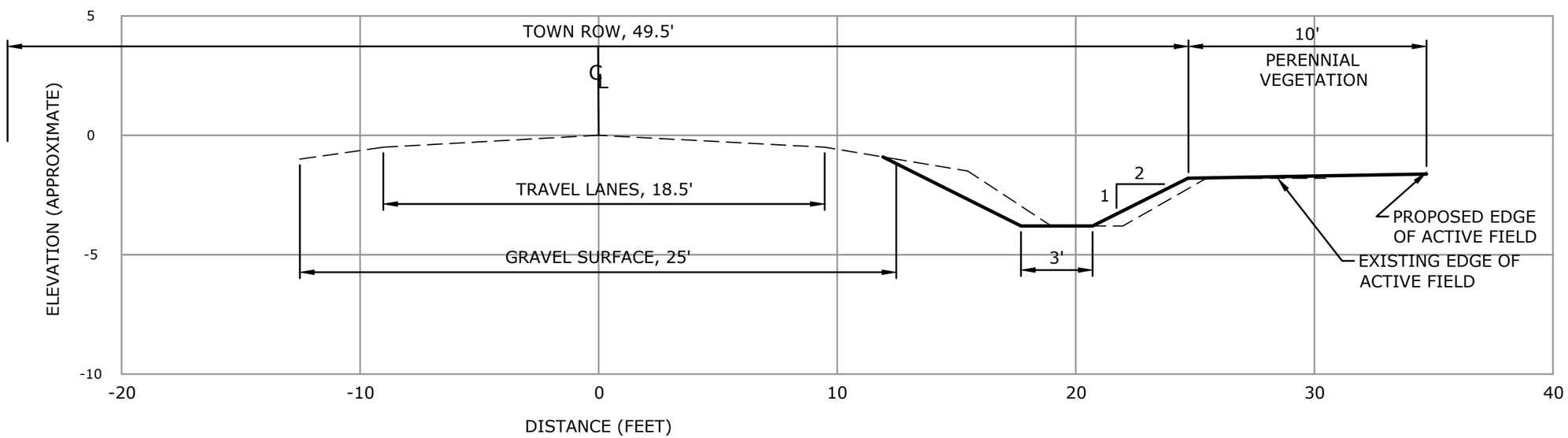

ROAD CROSS SECTION - B

SCALE: 1"=5'

MILONE & MACBROOM
1 South Main Street, 2nd Floor
Waterbury, Vermont 05676
(802) 882-8335
Fax (802) 882-8346
www.miloneandmacbroom.com

REVISIONS

DETAILS - ROAD CROSS SECTIONS

AHEAD OF THE STORM
THORP BROOK HEADWATER RESTORATION

EAST THOMPSON POINT ROAD
CHARLOTTE, VERMONT

DRAFT CONCEPT DESIGN

JCL	JCL	RS
DESIGNED	DRAWN	CHECKED

SCALE 1"=5'

DATE 3/22/2016

PROJECT NO. 3452-22

SHEET NO. 03

Copyright Milone & MacBroom, Inc - 2016

Drawing: W:\DESIGN\3452-22-DE\CAD\MF-DETAILS.DWG Layout Tab:SECTIONS
Plotted by: JESSICAL On this date: Tue, 2016 March 22 - 2:52pm

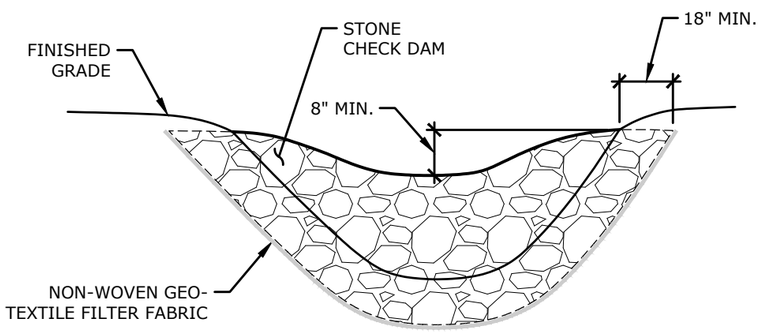

SECTION VIEW

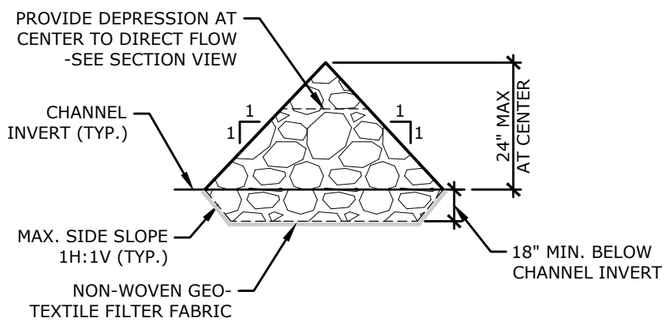

ELEVATION VIEW

NOTES:
EXTEND THE STONE A MINIMUM OF 18 INCHES BEYOND THE BANKS AND CHANNEL INVERT OF THE SWALE TO PREVENT CUTTING AROUND THE ENDS OF OR UNDERNEATH THE CHECK DAM.

USE TYPE 1 STONE FILL (D50=4") TO CREATE CHECK DAM. USE $\frac{1}{2}$ INCH CRUSHED STONE TO CREATE THE CUTOFF TRENCH.

USE CONTECH GEOTEX 801 NON-WOVEN GEOTEXTILE FILTER FABRIC OR APPROVED EQUAL ALONG THE BOTTOM OF THE CUTOFF TRENCH AS A FILTER

STONE CHECK DAM

NOT TO SCALE

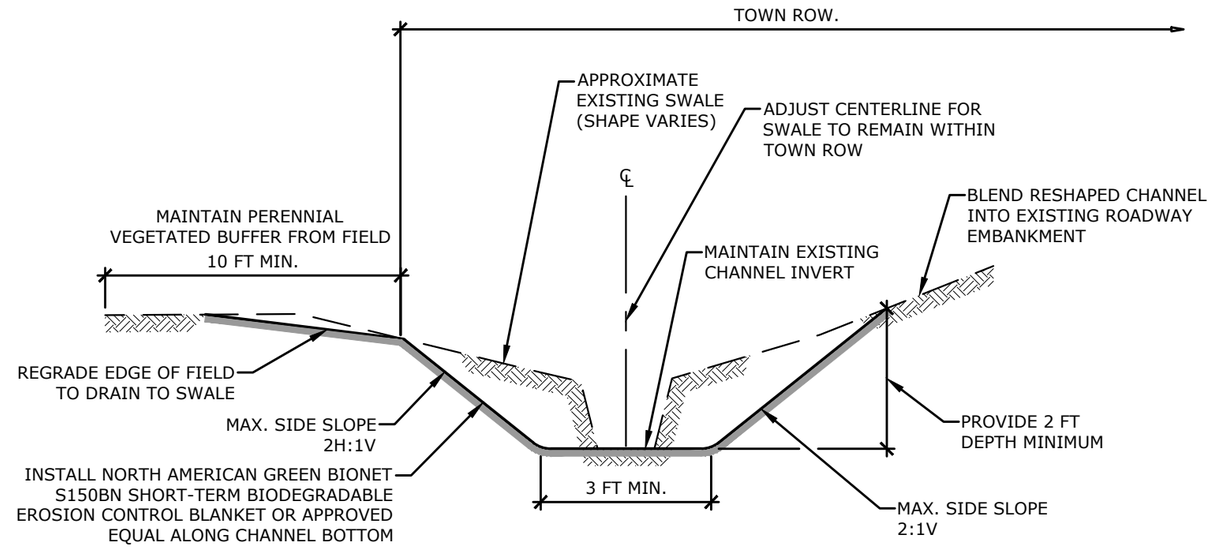

RESHAPED BIO-SWALE

NOT TO SCALE

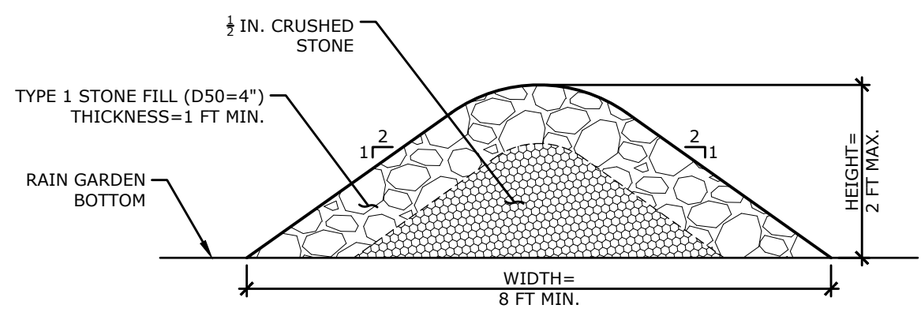

CROSS SECTION

NOTES:
EXTEND THE STONE A MINIMUM OF 18 INCHES INTO EXISTING BANKS TO PREVENT CUTTING AROUND THE ENDS OF THE FILTER BERM.

STONE FILTER BERM

NOT TO SCALE

MILONE & MACBROOM
1 South Main Street, 2nd Floor
Waterbury, Vermont 05676
(802) 882-8335
Fax (802) 882-8346
www.miloneandmacbroom.com

REVISIONS

DRAFT CONCEPT DESIGN

DETAILS

AHEAD OF THE STORM
THORP BROOK HEADWATER RESTORATION
EAST THOMPSON POINT ROAD
CHARLOTTE, VERMONT

JCL	JCL	RS
DESIGNED	DRAWN	CHECKED

SCALE: NOT TO SCALE
DATE: 3/22/2016
PROJECT NO.: 3452-22
SHEET NO.: 04

Copyright Milone & MacBroom, Inc - 2016

Drawing: W:\DESIGN\3452-22-DE\CAD\MF-DETAILS.DWG Layout: Tab:DETAILS
Plotted by: JESSICAL On this date: Tue, 2016 March 22 - 2:52pm