LINCOLN
APPLIED GEOLOGY, INC.
Environmental Consultants

December 5, 2007

Spencer Harris
Septic Officer
Town of Charlotte
P.O. Box 119
Charlotte, VT 05445

Re: Melrose Huff Property, Prindle and Roscoe Road, Charlotte, Vermont – Lot 1 and Lot 3 Subdivision and Water and Wastewater Permitting

Dear Spencer:

As you know, I've been working on the water/wastewater aspects of Melrose Huff's 16.4 acre two lot (Lot 1 and Lot 3) subdivision. Lots 1 and 3 are proposed to be ±5.06 acres and 11.34 acres in size, respectively. The Lot 1, ±10 acre subdivision was originally permitted (as part of the Horsford Lot 1/Lot 2 subdivision) with an off-site disposal area on Lot 2 which complied with the State regulations referenced in the Town's On-Site Disposal Ordinance. This off-site disposal area easement on Lot 2 is shown on Plan Sheet 1 along with the force main and related easement on Lot 3 that links it to the Lot 1 proposed residence. A soil evaluation in early 2002 indicated that this off-site area was still the most reasonable solution for providing a disposal solution for Lot 1. I have changed the design to a prescriptive mound system instead of a pretreated at-grade disposal system. Because it is a mound, I can now dimension the single mound area for maximum longevity. I evaluated 4 test pits in early 2002 to confirm Frank O'Brien's soil evaluation results. The results indicate a seasonal water table at 24" which will support a prescriptive mound system without pretreatment.

The results of Frank's soil evaluation for Lot 1 and my soil evaluation for both Lot 1 and Lot 3 (replacement system) are attached. This includes percolation test results for both lots. Relative to Lot 1, they provide the basis for a prescriptive mound with 12" of sand fill and a 5' x 100' seepage bed. The presented design on Plan Sheets 1, 2, 3 and 4 describes the proposed system which exceeds the required bed and basal area square footage. The attached mound dimension and pressure distribution detail describes the mound and the required distribution system as well as the effluent pump that is required. You should note that the force main was installed between the northwest corner of the disposal area easement and Lot 1 in early April 2003 at the time the Mushkat's force main was installed. The work was conducted by John Scott under Dave Fuqua and my supervision. The force main was successfully tested at 65 psi for 2 hours.

To approve the subdivision, the Lot 3 residence requires a replacement area. A performance based mound disposal site was identified in early 2002 behind the Huff residence on Roscoe Road. The basis of design of the mound is a desktop hydrogeologic evaluation of effluent mounding 6" below grade. With a water table at 12", only 6" is available for effluent transmission. The disposal area lies on the edge of a 15 to 20% slope so an average land slope of +10% was used as the basis of the hydro-analysis. In this regard, f = 9.4, h = 0.5', so the LLR is 4.7 gal/day/linear foot. This requires an 89' long mound disposal area, so a 5' x 90' seepage bed type mound was proposed. To minimize the sand when the replacement area is needed, the proposed mound with 1.5' of sand fill instead of 2.5' will require pretreatment with some innovative/alternative system, such as an AdvanTex system. At the time the replacement is needed, a complete design and permit application will be submitted for your or the State's review, approval and permit issuance.

A drilled bedrock well based water system is proposed, the details of which are presented on Plan Sheet 3. All water and wastewater systems are properly isolated relative to both on and off-site land uses.

The presented application should be complete with the $500.00 application fee, an exercised application, 2 copies of all design sheets, one copy of 11" x 17" design sheets and one copy of each attachment. Melrose Huff looks forward to your concurrence and issuance of the appropriate permit.

If you have any questions, please feel free to give me a call.

Very truly yours,
Lincoln Applied Geology, Inc.

AMERICAN INSTITUTE OF PROFESSIONAL GEOLOGISTS
CERTIFICATE NUMBER
6259
AIPG
STEPHEN REVELL
CERTIFIED PROFESSIONAL GEOLOGIST

Stephen Revell, CPG
Licensed Class B Designer #178

SR/rc

Enclosures
cc: Melrose Huff

F:\CLIENTS\OLD PROJECTS\00705\Spencer Harris Ltr.doc

Lincoln Applied Geology, Inc.
Environmental Consultants

163 Revell Road • Lincoln, VT 05443 • (802) 453-4384 • FAX (802) 453-5399

Wastewater Management Division - Permit Application

Wastewater System & Potable Water Supply

VERMONT
DEPARTMENT OF ENVIRONMENTAL CONSERVATION

For Office Use Only:

Application#	PIN#	Date Complete Application Received

Authority:
10 V.S.A. Chapter 64, the Environmental Protection Rules, Chapter 1, Wastewater System & Potable Water Supply Rules, and Chapter 21, Water Supply Rules, Appendix A. Part 11 - Small Scale Water Systems.

General Information:
The organization and/or content of this form may not be altered, however, the form is designed to expand to allow additional information to be entered. Changes in the organization and/or content of the form may result in an invalid application or permit.

In most cases a licensed designer will be required for your project and to help complete this application form. There are also line-by-line instructions available to assist with completing this form.

NOTE: We strongly suggest referring to the application instructions while completing this application form.

Part I Applicant (Landowner) & Project Contact Information

Section A - Applicant Details (if Landowner is an Individual or Individuals)

1 Last Name	2 First Name (and Middle Initial if appropriate)
Huff	Melrose

3 Mailing Address Line 1	4 Mailing Address Line 2
88 Roscoe Road	

5 Town/City	6 State/Province	7 Country	8 Zip/Postal Code
Charlotte	Vermont	United States	05445

9 Email Address	10 Telephone
mhuff@gmavt.net	802-425-2854

Remove This Applicant

Add Another Applicant

Section B - Applicant Details (if Landowner is other than an Individual or Individuals, e.g. Corporations, Homeowner's Associations, etc.)

1 Registered Legal Entity or Organization Name	2 Telephone

3 Mailing Address Line 1	4 Mailing Address Line 2

5 Town/City	6 State/Province	7 Country	8 Zip/Postal Code
		United States	

Certifying Official
The Certifying Official must be a person who has signatory authority for the legal entity or organization that is the Applicant. A copy of the document authorizing this person to act as a signatory authority must be attached to this application.

9 Certifying Official Last Name	10 Certifying Official First Name (and MI if appropriate)

11 Certifying Official Title

12 Certifying Official Email Address	13 Telephone

Remove This Applicant

Add Another Applicant

Section C - Primary Contact Information (if other than Applicant)

1 Last Name	2 First Name (and Middle Initial if appropriate)

3 Mailing Address Line 1	4 Mailing Address Line 2

5 Town/City	6 State/Province	7 Country	8 Zip/Postal Code
		United States	

9 Email Address	10 Telephone

Section D - Building/Business Owner Information

1 Last Name	2 First Name (and Middle Initial if appropriate)

3 Mailing Address Line 1	4 Mailing Address Line 2

5 Town/City	6 State/Province	7 Country	8 Zip/Postal Code
		United States	

9 Email Address	10 Telephone

Part II Certifying Designer(s) Information

1 Designer Last Name	2 Designer First Name (and Middle Initial if appropriate)
Revell	Stephen

3 Designer License#	4 Company Name
00178	Lincoln Applied Geology, Inc.

5 Mailing Address Line 1	6 Mailing Address Line 2
163 Revell Drive	

7 Town/City	8 State/Province	9 Country	10 Zip/Postal Code
Lincoln	Vermont	United States	05443

11 Email Address	12 Telephone
srevell@lagvt.com	802-453-4384

13 Designer Role(s) (check all that apply)

- [x] Water Supply Designer
- [x] Wastewater Disposal System Designer

Remove This Designer

Add Another Designer

Part III Property Location Information

Section A - Property Parcel ID#(s) and Location(s)

1 Please provide the property location information including Town or City Parcel ID#, Town/City, and Street or Road location in the table below:

	(a) Town/City Parcel ID#	(b) Town or City	(c) Street or Road Location
X	11-01-03	Charlotte	88 Roscoe Road

Add Another Property

Section B - Center of Property GPS Coordinates

1 Enter the approximate center of property coordinates using GPS set for NAD83 or as derived from a map (map must be based on NAD83).

(a) Latitude
(in decimal degrees to five decimal places, ex. 44.38181°)

N 44.78333 °

(b) Longitude
(in decimal degrees to five decimal places, ex. -72.31392 °)

W (-) 73.15444 °

Part IV Project Information

Section A - General Project Information & Questions

1 Project Name (if applicable)
Huff Subdivision

2 Total Acreage of Property
16.4

3 Business Name (if applicable)

4 Detailed Project Description
Subdivision of a 16.4 acre improved property into Lot 1, a 5.06 acre undeveloped property to be served by on-site water and off-site septic, and Lot 3, an 11.34 acre developed property with a 3 bedroom single family residence served by on-site water and septic. A replacement disposal area is defined for Lot 3.

5 Were all buildings or structures, campgrounds, and their associated potable water supplies and wastewater systems substantially completed before January 1, 2007 and all improved and unimproved lots in existence before January 1, 2007? ..... (●) Yes ( ) No

6 Does this application include subdividing the property? ..... (●) Yes ( ) No

7 Has anyone from the Wastewater Management Division's Regional Office been to the property? ..... (●) Yes ( ) No

If Yes, enter the staff person's name and the date of the visit.

(a) Name of Staff Person
Ernest Christianson

(b) Date of Visit
01-07-2002

8 Will any construction occur within 50 feet of a wetland boundary, mapped or designated? ..... ( ) Yes (●) No

If Yes, contact the Wetlands Program of the Water Quality Division at (802) 241-3770.

9 Will more than one acre be disturbed during the entire course of construction, including all lots and phases? ..... ( ) Yes (●) No

If Yes, contact the Stormwater Program of the Water Quality Division at (802) 241-4320.

10 Will there be any stream crossings by roads, utilities, or other construction? ..... ( ) Yes (●) No

If Yes, contact the River Corridor Mgmt. Program of the Water Quality Division at:

Central & Northwest Vermont ..... (802) 879-5631
Southern Vermont ..... (802) 786-5906
Northeastern Vermont ..... (802) 751-0129

11 Is the project located in a special flood hazard area as designated on the flood insurance maps prepared for a municipality by the Federal Emergency Management Agency? ..... ( ) Yes (●) No

If Yes, show the special flood hazard area limits on the site plan.

12 Act 250: Has the Applicant (Landowner) subdivided any other lots of any size within a five mile radius of this subdivision, or within the environmental district within the last five years ? ..... ( ) Yes (●) No

If Yes, enter the town(s) and the associated number of lots in the table below:

	(a) Town	(b) Number of Lots
X		

Add Another Town/Lot

13 Is there any prior Act 250 jurisdiction on the tract of land? ..... ( ) Yes (●) No

If Yes, enter the Act 250 permit number:

(a) Act 250 Permit Number

Section B - Project Deed Reference

1 Please provide the Town, Book, and Page reference for the current landowner's deed(s) to this property in the table below:

	(a) Town	(b) Book	(c) Page(s)
X	Charlotte	31	19-20
X	Charlotte	117	384
X	Charlotte	118	26
X	Charlotte	122	17-20 & 22
X	Charlotte	145	481
X	Charlotte	147	224-225
X	Charlotte	165	331

Add Another Deed Reference

Section C - Project Plan Reference

1 Please provide the following information for all water supply and wastewater disposal system plans being submitted.

	(a) Sheet#	(b) Title	(c) Plan Date	(d) Plan Revision Date
X	1	Lot 1 and Lot 3 Subdivision Site Plan	12-03-2007	
X	2	Enlarged Site Plan - Lot 1 & Lot 3 Proposed Disposal Areas	12-03-2007	
X	3	Proposed Water and Wastewater System Details	12-03-2007	
X	4	Proposed Wastewater System Details and Specifications	12-03-1007	

Add Another Plan Reference

Section D - Existing Project Lot/BuildingDetails

Please provide the existing project details. This section is used to describe what is existing for the project. For example, if you are subdividing an undeveloped 21-acre parcel, you would list the existing parcel. If you are revising the boundary lines of two commercial lots in an industrial park, and constructing an addition to an existing building you would list the existing lot numbers, existing acres, existing buildings, existing uses, construction date(s), prior permits, and answer the compliance questions.

1 Lot#	2 Lot Size (acres)	3 Existing Use of the Lot
1	16.4	Residential

4 Provide the following information for each building on the lot:

	(a) Building ID	(b) Existing Use	(c) Date Construction of Building Substantially Complete	(d) Prior Permits	(e) In compliance with with existing permits?
X	1	Residential	Pre-1969	None	◯ Yes ◯ No

Add Another Building

Remove This Lot

Add Another Lot

Section E - Proposed Project Lot/BuildingDetails

This section is used to describe what you are proposing to do in this project. For example, if you were going to create 4 lots for construction of single family residences, you would list each lot, proposed acreage, proposed buildings, and proposed use.

1 Lot#	2 Lot Size (acres)	3 Proposed Use of the Lot
1	5.06	Residential

4 Is the lot being created as part of a subdivision? ..... (●) Yes ( ) No

5 Are you requesting that the Blood, Marriage, or Civil Union special fee be applied to this lot? ..... ( ) Yes (●) No

6 If the lot is exempt, please indicate the specific exemption from the Wastewater System and Potable Water Supply Rules? .....

7 Provide the following information for each building on the lot:

	(a) Building ID	(b) If building is exempt, indicate exemption	(c) Construction or increased flow?	(d) Proposed Use
X	1		☒	4 Bedroom Residence

Add Another Building

Remove This Lot

1 Lot#	2 Lot Size (acres)	3 Proposed Use of the Lot
3	11.34	Residential

4 Is the lot being created as part of a subdivision? ..... (●) Yes ( ) No

5 Are you requesting that the Blood, Marriage, or Civil Union special fee be applied to this lot? ..... ( ) Yes (●) No

6 If the lot is exempt, please indicate the specific exemption from the Wastewater System and Potable Water Supply Rules? .....

7 Provide the following information for each building on the lot:

	(a) Building ID	(b) If building is exempt, indicate exemption	(c) Construction or increased flow?	(d) Proposed Use
X	1	§1-304(A)(1)	☐	Existing 3 Bedroom Residence

Add Another Building

Remove This Lot

Add Another Lot

Part V Water Supply Information

Section A - Water Supply Screening Questions

1 Are you proposing a new water supply for this project? ..... (●) Yes ( ) No

2 Are you proposing changes to an existing water supply for this project? ..... ( ) Yes (●) No

3 Is there a connection to an existing water supply for the project? ..... (●) Yes ( ) No

*If you answered **No** to **all three of the above questions**, skip to Part VI. Otherwise, proceed with Part V.*

Section B - General Water Supply Questions

1 Does this project involve a failed water supply? ..... ( ) Yes (●) No

2 Will any of the proposed water sources serve 25 or more people or have 15 or more service connections? ..... ( ) Yes (●) No

If Yes, the applicant must contact the Water Supply Division at (802) 241-3400 for source, construction and operating

3 Are any of the existing or proposed water sources located within a special flood hazard area? ..... ( ) Yes (●) No

4 Are any of the existing or proposed water sources located within a floodway? ..... ( ) Yes (●) No

5 Are any of the proposed water sources located within 1 mile of a hazardous waste site as designated by the Waste Management Division and identified on the Agency mapping website? ..... ( ) Yes (●) No

If Yes, please submit additional information on the site. The Waste Management Division can be reached at (802) 241-3888.

6 Does this project require an approval letter from the Water Supply Division for the construction of a public water system, municipal water line extension over 500 feet, or hydrants or sprinkler systems? ..... ○ Yes ● No

If Yes, please submit a copy of the approval letter from the Water Supply Division.

7 Does the proposed or existing water supply(ies) use a water treatment device to obtain compliance with the quality requirements in the Water Supply Rule? ..... ○ Yes ● No

If Yes, please submit additional information regarding the constituent(s) that exceeds the standards and plans, details, and specifications of the treatment device.

8 Is any portion of the proposed water supply located in or near a Water Source Protection Area as designated by the Water Supply Division? ..... ○ Yes ● No

If in areas of known interference issues, please contact the Water Supply Division at (802) 241-3400.

Section C - Individual Water Supply Details

Please provide the following information for each of the existing and proposed water supply(ies) serving a building or structure, or campground on the property.

1 Water Supply Name/Identifier	2 Water Supply Owner (if not Applicant)
Lot 1 Well	
3 Water Source Type	**4 Type of Change to Supply**
Non-Public Drilled Bedrock Well	New System

5 Lots/Buildings Served by this Water Supply System

	(a) Lot#	(b) Building ID	(c) Type of Change to the Building's Supply	Design Flows (Gallons Per Day) (d) Existing	(e) Increase	(f) Total	(g) Rule or Meter Based Flows
X	1	1	Connection to New System	0	490	490	Rule-based
				6	7	8	
				0	490	490	

Add Another Lot/Building Served by this Supply

9 Is this water supply located off-lot? ..... ○ Yes ● No

10 Is this water supply shared? ..... ○ Yes ● No

If the water supply is located off-lot or shared, submit a copy of the agreement to provide an easement prior to construction.

11 Is a variance being requested for this water supply? ..... ○ Yes ● No

If Yes, please submit additional details related to the variance request.

Remove This Water Supply

1 Water Supply Name/Identifier	2 Water Supply Owner (if not Applicant)
Lot 3 Well	
3 Water Source Type	**4 Type of Change to Supply**
Non-Public Drilled Bedrock Well	No Change

5 Lots/Buildings Served by this Water Supply System

	(a) Lot#	(b) Building ID	(c) Type of Change to the Building's Supply	Design Flows (Gallons Per Day) (d) Existing	(e) Increase	(f) Total	(g) Rule or Meter Based Flows
X	3	1	No Change	420	0	420	Rule-based
				6	7	8	
				420	0	420	

Add Another Lot/Building Served by this Supply

9 Is this water supply located off-lot? ○ Yes ● No

10 Is this water supply shared? ○ Yes ● No

If the water supply is located off-lot or shared, submit a copy of the agreement to provide an easement prior to construction.

11 Is a variance being requested for this water supply? ○ Yes ● No

If Yes, please submit additional details related to the variance request.

Remove This Water Supply

Add Another Water Supply

Section D - Water Supply Design Flows Summary Table

1 If the project includes more than one water supply, please list each water supply system and provide the total water supply design flows for the project. **IMPORTANT**: Please don't include systems that were identified in this Part on Section C, Line 4 as a "Replacement Area Designation" in this summary table.

	(a) Water Supply Name/Identifier	Design Flows (Gallons Per Day) (b) Existing	(c) Increase	(d) Total
X	Lot 1 Well	0	490	490
X	Lot 3 Well	420	0	420
		2	3	4
		420	490	910

Add Another Water Supply

Part VI Wastewater Disposal System Information

Section A - Wastewater Disposal System Screening Questions

1 Are you proposing a new wastewater disposal system or replacement area for this project? ● Yes ○ No

2 Are you proposing changes to an existing wastewater disposal system for this project? ○ Yes ● No

3 Is there a connection to an existing wastewater disposal system for the project? ● Yes ○ No

*If you answered **No** to **all three of the above questions**, skip to Part VII. Otherwise, proceed with Part VI.*

Section B - General Wastewater Disposal System Questions

1 Does this project involve a failed wastewater disposal system? ○ Yes ● No

2 Do any of the systems require a curtain or dewatering drain as part of the design? ○ Yes ● No

3 Is a hydrogeologic study required for this project? ● Yes ○ No

4 If the project has a soil-based wastewater disposal system with design flows that exceed 1,000 GPD, is this project located in a Class A Watershed? ○ Yes ○ No ● NA

If Yes, indicate the Class A Watershed in which the system(s) is located:

(a) Class A Watershed Name

5 Are there any existing or proposed floor drains as part of this project? ○ Yes ● No

If Yes, indicate where the floor drains will discharge:

(a) Floor Drain Discharge Point

6 If the project utilizes an Innovative/Alternative System or Product, has the applicant received a copy of the Wastewater Management Division's approval letter? ○ Yes ○ No ● NA

7 Is any portion of the proposed wastewater disposal system located in or near a Water Source Protection Area as designated by the Water Supply Division? ○ Yes ● No

If Yes, contact the Water Supply Division at (802) 241-3400.

Section C - Individual Wastewater Disposal System Details

Please provide the following information for each of the existing and proposed wastewater disposal systems serving a building or structure, or campground on the property.

1 Wastewater Disposal System Name/Identifier	2 Wastewater Disposal System Owner (if not Applicant)
Lot 1 Primary	
3 Wastewater Disposal System Type	**4 Type of Change to System**
Mound	New System

5 Lots/Buildings Served by this Wastewater Disposal System

	(a) Lot#	(b) Building ID	(c) Type of Change to the Building's System	Design Flows (Gallons Per Day) (d) Existing	(e) Increase	(f) Infiltration	(g) Total	(h) Rule or Meter Based Flows
X	1	1	Connection to New System	0	490	0	490	Rule-based
				6	7	8	9	
				0	490	0	490	

Add Another Lot/Building Served by this System

10 Is this wastewater disposal system located off-lot? ..... (●) Yes ( ) No

11 Is this wastewater disposal system shared? ..... ( ) Yes (●) No

If the wastewater disposal system is located off-lot or shared, submit a copy of the agreement to provide an easement prior to initiation of construction.

12 Is a variance being requested for this wastewater disposal system? ..... ( ) Yes (●) No

If Yes, please submit additional details related to the variance request.

13 If this wastewater disposal system type is a connection to an Indirect Discharge System, please provide the Indirect Discharge System ID number.

Indirect Discharge System ID Number

14 If this wastewater disposal system type is a connection to a municipal system, please select the town.

Town

15 If this wastewater disposal system is a soil-based system, please select the design approach used.

Design Approach Used

16 For soil-based systems, please check all that apply.

☐ Storage and Dose ☐ Filtrate

17 If this is an Innovative/Alternative soil-based system, please select the system use type.

Innovative/Alternative System Use Type

18 If this is an Innovative/Alternative soil-based system, please select the Innovative/Alternative system or product.

Innovative/Alternative System or Product

Remove This Wastewater System

1 Wastewater Disposal System Name/Identifier	2 Wastewater Disposal System Owner (if not Applicant)
Lot 3 Primary	
3 Wastewater Disposal System Type	**4 Type of Change to System**
In-ground	No Change

5 Lots/Buildings Served by this Wastewater Disposal System

	(a) Lot#	(b) Building ID	(c) Type of Change to the Building's System	Design Flows (Gallons Per Day) (d) Existing	(e) Increase	(f) Infiltration	(g) Total	(h) Rule or Meter Based Flows
X	3	1	No Change	420	0	0	420	Rule-based
Add Another Lot/Building Served by this System				6	7	8	9	
				420	0	0	420	

10 Is this wastewater disposal system located off-lot? ..... ○ Yes ◉ No

11 Is this wastewater disposal system shared? ..... ○ Yes ◉ No

If the wastewater disposal system is located off-lot or shared, submit a copy of the agreement to provide an easement prior to initiation of construction.

12 Is a variance being requested for this wastewater disposal system? ..... ○ Yes ◉ No

If Yes, please submit additional details related to the variance request.

13 If this wastewater disposal system type is a connection to an Indirect Discharge System, please provide the Indirect Discharge System ID number.

Indirect Discharge System ID Number

14 If this wastewater disposal system type is a connection to a municipal system, please select the town.

Town

15 If this wastewater disposal system is a soil-based system, please select the design approach used.

Design Approach Used

16 For soil-based systems, please check all that apply.

☐ Storage and Dose ☐ Filtrate

17 If this is an Innovative/Alternative soil-based system, please select the system use type.

Innovative/Alternative System Use Type

18 If this is an Innovative/Alternative soil-based system, please select the Innovative/Alternative system or product.

Innovative/Alternative System or Product

Remove This Wastewater System

1 Wastewater Disposal System Name/Identifier	2 Wastewater Disposal System Owner (if not Applicant)
Lot 3 Replacement Area	
3 Wastewater Disposal System Type	**4 Type of Change to System**
Mound	No Change

5 Lots/Buildings Served by this Wastewater Disposal System

	(a) Lot#	(b) Building ID	(c) Type of Change to the Building's System	Design Flows (Gallons Per Day) (d) Existing	(e) Increase	(f) Infiltration	(g) Total	(h) Rule or Meter Based Flows
X	3	1	No Change	420	0	0	420	Rule-based
				6	7	8	9	
				420	0	0	420	

Add Another Lot/Building Served by this System

10 Is this wastewater disposal system located off-lot? ..... ◯ Yes ◉ No

11 Is this wastewater disposal system shared? ..... ◯ Yes ◉ No

If the wastewater disposal system is located off-lot or shared, submit a copy of the agreement to provide an easement prior to initiation of construction.

12 Is a variance being requested for this wastewater disposal system? ..... ◯ Yes ◉ No

If Yes, please submit additional details related to the variance request.

13 If this wastewater disposal system type is a connection to an Indirect Discharge System, please provide the Indirect Discharge System ID number.

Indirect Discharge System ID Number

14 If this wastewater disposal system type is a connection to a municipal system, please select the town.

Town

15 If this wastewater disposal system is a soil-based system, please select the design approach used.

Design Approach Used

16 For soil-based systems, please check all that apply.

☐ Storage and Dose ☐ Filtrate

17 If this is an Innovative/Alternative soil-based system, please select the system use type.

Innovative/Alternative System Use Type

18 If this is an Innovative/Alternative soil-based system, please select the Innovative/Alternative system or product.

Innovative/Alternative System or Product

Remove This Wastewater System

Add Another Wastewater System

Section D - Wastewater Disposal Systems Design Flows Summary Table

1 If the project includes more than one wastewater disposal system, please list each system on this page and provide the total wastewater disposal design flows for the project. **IMPORTANT**: Please don't include systems that were identified in this Part on Section C, Line 4 as a "Replacement Area Designation" in this summary table.

	(a) Wastewater Disposal System Name/Identifier	Design Flows (Gallons Per Day) (b) Existing	(c) Increase	(d) Infiltration	(e) Total
X	Lot 1 Primary	0	490	0	490
X	Lot 3 Primary	420	0	0	420
		2	3	4	5
		420	490	0	910

Add Another Wastewater System

Part VII Application Fees

1 Fee Amount $500.00

2 Fee Calculation Details

Town of Charlotte Permit Fee = $500.00

Part VIII Designer Certification & Copyright License

Section A - Certifying Designer 1 Certification & Copyright License

"i hereby certify that in the exercise of my reasonable professional judgment, the design-related information submitted with this application is true and correct, and that the design included in this application for a permit complies with the Vermont Wastewater System and Potable Water Supply Rules and the Vermont Water Supply Rules.

As the individual who prepared this application, including all documents that are marked as copyrighted, I hereby grant a non-exclusive, limited license to the State to allow the documents to be made available for public review and copying in order to properly implement and operate the permitting programs for Wastewater Systems and Potable Water Supplies, and for no other purposes. As a condition to this license, the State agrees that it will not make any changes to such documents, nor will the State delete any copyright notices on such documents."

1 Check the design(s) you are certifying. This should be the same as the Designer Role(s) you selected in Part II, Section A, Line 13.

- [x] Water Supply Designer
- [x] Wastewater Disposal System Designer

1 Designer 1 Name	2 Designer 1 Signature	3 Signature Date
Stephen Revell		12/4/07

Section B - Certifying Designer 2 Certification & Copyright License

"i hereby certify that in the exercise of my reasonable professional judgment, the design-related information submitted with this application is true and correct, and that the design included in this application for a permit complies with the Vermont Wastewater System and Potable Water Supply Rules and the Vermont Water Supply Rules.

As the individual who prepared this application, including all documents that are marked as copyrighted, I hereby grant a non-exclusive, limited license to the State to allow the documents to be made available for public review and copying in order to properly implement and operate the permitting programs for Wastewater Systems and Potable Water Supplies, and for no other purposes. As a condition to this license, the State agrees that it will not make any changes to such documents, nor will the State delete any copyright notices on such documents."

1 Check the design(s) you are certifying. This should be the same as the Designer Role(s) you selected in Part II, Section B, Line 13.

- [ ] Water Supply Designer
- [ ] Wastewater Disposal System Designer

1 Designer 2 Name	2 Designer 2 Signature	3 Signature Date

Part IX Applicant(s) Signature & Acknowledgements

In order to insure compliance with the requirements of the regulations administered by the Department of Environmental Conservation, Wastewater Management Division, it may be necessary to visit the property. As this would involve a Department employee entering private property, we request your approval to do so.

1 If we do visit your property, do you have any special instructions?

Call designer to set up appointment.

"As landowner of the property for which I am requesting a permit from the Department of Environmental Conservation, I understand that by signing this application I am granting permission for the Department employees to enter the property, during normal working hours, to insure compliance of the property with the applicable rules of the Department.

I also understand that I am not allowed to commence any site work or construction on this project without written approval from the Department of Environmental Conservation.

If my project utilizes an Innovative/Alternative System or Product, I have received a copy of the Wastewater Management Division's approval letter and agree to abide by the conditions of the approval.

I also certify that to the best of my knowledge and belief the information submitted above is true, accurate and complete."

X	2 Print Applicant Name	3 Applicant Signature	4 Signature Date
	Melrose E. Huff	Melrose E. Huff (SR-PDF only)	12-5-07

Add Applicant Signature Block

Melrose Huff Subdivision
Lot 1 Mound Disposal Area
and
Lot 3 Replacement Disposal Area
Soil Profile Descriptions
January 7, 2002 and January 25, 2002
By Stephen Revell, Licensed Class B Designer #178
With Ernie Christianson in Attendance

Test Pit #1R January 7, 2002

0-8" Brown loam, friable, blocky, well drained.

8-24" Brown-gray silt loam, friable, blocky, mottled at 12", suitable for a performance based mound.

24-48" Gray clay loam to clay, firm, platy, mottled, no water or ledge to depth.

Test Pit #2R January 7, 2002

0-10" Brown loam, friable, blocky, well drained.

10-20" Brown-gray silt loam, friable, blocky, mottled at 12" to 14", suitable for a performance based mound.

20-42" Gray clay loam to clay, firm, platy, mottled, no water or ledge to depth.

Test Pit #3R January 7, 2002

0-8" Brown loam, friable, blocky, well drained.

8-24" Brown-gray silt loam, friable, blocky, mottled at 12" to 14", suitable for a performance based mound.

24-48" Gray clay loam to clay, firm, platy, mottled, no water or ledge to depth.

Test Pit #4R January 25, 2002

0-6" Brown fine sandy loam, loose, granular, well drained.

6-12" Orange-brown fine sandy loam, loose, granular to blocky, well drained.

12-24" Brown fine sandy loam, friable, blocky, well drained, suitable for a prescriptive mound.

24-42" Tan-gray silt loam, friable to firm, blocky, mottled at 26", no water or ledge to depth.

Test Pit #5R January 25, 2002

0-6" Brown fine sandy loam, loose, granular, well drained.

6-14" Orange-brown fine sandy loam, loose, granular to blocky, well drained.

14-25" Brown fine sandy loam, friable, blocky, mottled at 24", well drained, suitable for a prescriptive mound.

25-48" Tan-gray silt loam, friable to firm, blocky, mottled, no water or ledge to depth.

Test Pit #6R January 25, 2002

0-6" Brown fine sandy loam, loose, granular, well drained.

6-24" Orange-brown slightly stony fine sandy loam, loose, granular, well drained, suitable for a prescriptive mound.

24-48" Tan-gray stony fine sandy loam, friable to firm, mottled, no water or ledge to depth.

Test Pit #7R January 25, 2002

0-8" Brown fine sandy loam, loose, granular, well drained.

8-24" Orange-brown slightly stony fine sandy loam, loose, granular, well drained, suitable for a prescriptive mound.

24-42" Tan-gray stony fine sandy loam, friable to firm, mottled, no water or ledge to depth.

Melrose Huff Subdivision
Lot 1 Off-Site Disposal Area
Soil Profile Descriptions and Percolation Test Results
By Frank O'Brien, P.E.

Test Pit #7 (TP-7) August 24, 1999

0-4" Topsoil

4-20" Orange brown fine sandy loam.

20-25" Compact light brown silt loam.

25-32" Dense light brown silt loam, mottled.

32-39" Dense gray brown clay, clay loam, mottled.

Test Pit #15 (TP-15) August 24, 1999

0-6" Topsoil

6-15" Orange brown fine sandy loam.

15-24" Brown fine sandy loam.

24-28" Compact to dense light brown stony silt loam, mottled.

28-32" Dense gray silty clay.

Test Pit #16 (TP-16) August 24, 1999

0-6" Topsoil.

6-15" Orange brown fine sandy loam.

15-24" Brown fine sandy loam.

24-30" Compact to dense light bnrown stony silt loam, mottled.

30-36" Dense gray silty clay.

Test Pit #18 (TP-18) August 24, 1999

0-6" Topsoil.

6-12"	Orange brown fine sandy loam.
12-21"	Brown fine sandy loam.
21-26"	Compact to dense light brown stony silt loam.

Percolation Test Results December 14, 1999

P-1	10 minutes per inch
P-2	8 minutes per inch
P-3	13 minutes per inch

F:\CLIENTS\OLD PROJECTS\00705\Test Pit Logs-Frank O'Brien.doc

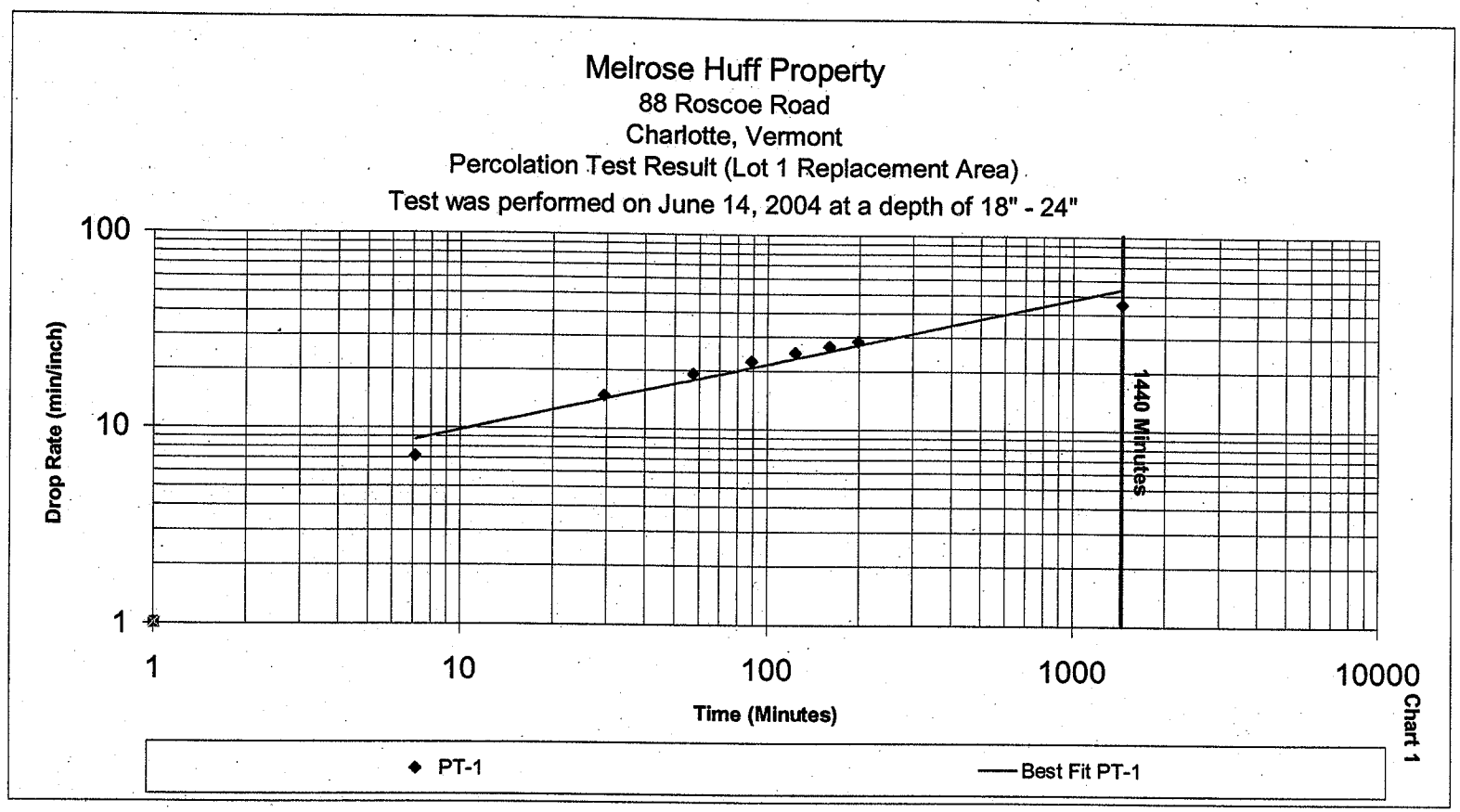
Melrose Huff Property
88 Roscoe Road
Charlotte, Vermont
Percolation Test Result (Lot 1 Replacement Area)
Test was performed on June 14, 2004 at a depth of 18" - 24"
100
10
1
Drop Rate (min/inch)
1
10
100
1000
10000
Time (Minutes)
1440 Minutes
PT-1
Best Fit PT-1
Chart 1

Melrose Huff Property
88 Roscoe Road
Charlotte, Vermont
Percolation Test Result (Lot 1 Replacement Area)
Test was performed on June 14, 2004 at a depth of 18" - 24"

PT-1	Drop Time (min)	Total Drop Time (min)	Total Drop (inches)	Drop Rate (min/inch)
	7.1	7.1	1	7.1
	22.2	29.3	2	14.6
	27.8	57.1	3	19.0
	31.5	88.6	4	22.2
	34.3	122.9	5	24.6
	36.5	159.4	6	26.6
	38.3	197.7	7	28.2
	---	**1440.0**	---	**44.8**

*NOTE:
Drop time includes fill time for each of the seven runs.

Table 1

PRESSURE DISTRIBUTION & MOUND DIMENSION DETAILS

CLIENT'S NAME: Huff Lot 3 Replacement
DATE: 12/4/2007 PERFORMED BY: S. Revell LAG Project #: 00705

Design Flow Rate	420	GPD
Width of Distribution Stone Bed/Trench	5	FEET
Length of Distribution Stone Bed/Trench	90	FEET
Thickness of Sand Beneath Distribution Stone Bed/Trench	1.5	FEET
Thickness of Stone Beneath Laterals	6	INCHES
Soil Cover Thickness at Edge of Level Area	6	INCHES
Front Slope of Finished Mound	33	PERCENT
Side and Rear Slope of Finished Mound	33	PERCENT
Percolation Rate	45	MPI
Natural Ground Slope	10	PERCENT
Thickness of Sand on Upper Side of Level Area	2.15	FEET
Thickness of Sand on Lower Side of Level Area	2.85	FEET
Width of Level Area	7	FEET
Length of Level Area	92	FEET
Area of Distribution Stone Bed/Trench	450	SQUARE FT
Volume of Stone Required	10	CUBIC YARDS
Proposed Basal Area	1835	SQUARE FEET
Volume of Mound Sand Required	225.4	CUBIC YARDS
Number of Laterals	2	
Length of Each Lateral	42.5	FEET
Number of Orifices in the Manifold	0	
Number of Orifices in Each Lateral	9	
Distance Between Manifold and First Orifice	2.5	FEET
Distance Between Orifices (on center)	5	FEET
Distribution Area per Orifice	25.00	SQ. FT.
Design Pressure Head	5	FEET
Diameter of Orifices (enter as fraction)	0.188	INCHES
Elevation From Pump Intake to Laterals (0 if siphon)	-5	FEET
Diameter of Force Main	1.25	INCHES
Length of Force Main	260	FEET
Length of Manifold to Lateral	0	FEET
Diameter of Manifold Pipe	1.5	INCH
Diameter of Lateral Pipe	1	INCH
Friction Loss in Force Main	15.48	FEET
Friction Loss in Manifold	0.00	FEET
Friction Loss in Section 1	0.11	FEET
Friction Loss in Entire Lateral	0.69	FEET
Discharge Rate at First Orifice	0.93	GPM
Discharge Rate at Last Orifice	0.87	GPM
Percent Difference in Flow Rate First to Last Orifice	5.89	PERCENT
Total Dynamic Head Loss	16.846	FEET
Total Distribution System Flow	15.75	GPM
Volume of Distribution System	3.47	GALLONS
Pump Capacity 15.75 GPM vs	16.846	FEET OF HEAD
Volume per Dose	105	GALLONS
On/Off Float Swing (1,000 gal. Tank)	3.5	INCHES

PRESSURE DISTRIBUTION & MOUND DIMENSION DETAILS

CLIENT'S NAME: Huff Lot 3 Replacement
DATE: 12/4/2007 PERFORMED BY: S. Revell LAG Project #: 00705

DIMENSIONS OF MOUND SYSTEM

Dimensions of Mound Sand

5.0 feet from level area to uphill sand toe

7.1 ft corner of level area to upper toe corner

7 ft wide level area

6.5 ft to side toe from upper edge of level area

5 ft wide stone bed/trench
90 ft long stone bed/trench

8.6 ft to side toe from lower edge of level area

92 ft long level area

17.5 ft corner of level area to lower toe corner

12.4 feet from level area to downhill sand toe

Dimensions of Final Cover

6.2 feet from level area to uphill toe

8.7 ft corner of level area to upper fill toe

8.0 ft to side toe from upper edge of level area

7 ft wide level area

92 ft long level area

10.2 ft to side toe from lower edge of level area

20.6 ft corner of level area to lower fill toe

14.6 feet from level area to downhill toe

PLOW AREA LAYOUT MEASUREMENTS

Center of Bed/Trench to Downslope Toe	63.2 feet
End of Level Area @ Midpoint to Downslope Toe	23.2 feet
Center of Bed/Trench to Upslope Toe	53.1 feet
End of Level Area @ Midpoint to Upslope Toe	11.5 feet

PRESSURE DISTRIBUTION & MOUND DIMENSION DETAILS

CLIENT'S NAME: Huff Lot 1-4 Bedroom
DATE: 12/3/2007 PERFORMED BY: S. Revell LAG Project #: 00705

Design Flow Rate	490	GPD
Width of Distribution Stone Bed/Trench	5	FEET
Length of Distribution Stone Bed/Trench	100	FEET
Thickness of Sand Beneath Distribution Stone Bed/Trench	1	FEET
Thickness of Stone Beneath Laterals	6	INCHES
Soil Cover Thickness at Edge of Level Area	6	INCHES
Front Slope of Finished Mound	33	PERCENT
Side and Rear Slope of Finished Mound	33	PERCENT
Percolation Rate	15	MPI
Natural Ground Slope	10	PERCENT
Thickness of Sand on Upper Side of Level Area	1.65	FEET
Thickness of Sand on Lower Side of Level Area	2.35	FEET
Width of Level Area	7	FEET
Length of Level Area	102	FEET
Area of Distribution Stone Bed/Trench	500	SQUARE FT
Volume of Stone Required	12	CUBIC YARDS
Proposed Basal Area	1822	SQUARE FEET
Volume of Mound Sand Required	170.4	CUBIC YARDS
Number of Laterals	2	
Length of Each Lateral	47.5	FEET
Number of Orifices in the Manifold	0	
Number of Orifices in Each Lateral	10	
Distance Between Manifold and First Orifice	2.5	FEET
Distance Between Orifices (on center)	5	FEET
Distribution Area per Orifice	25.00	SQ. FT.
Design Pressure Head	5	FEET
Diameter of Orifices (enter as fraction)	0.188	INCHES
Elevation From Pump Intake to Laterals (0 if siphon)	14	FEET
Diameter of Force Main	2	INCHES
Length of Force Main	2280	FEET
Length of Manifold to Lateral	0	FEET
Diameter of Manifold Pipe	2	INCH
Diameter of Lateral Pipe	2	INCH
Friction Loss in Force Main	15.98	FEET
Friction Loss in Manifold	0.00	FEET
Friction Loss in Section 1	0.00	FEET
Friction Loss in Entire Lateral	0.03	FEET
Discharge Rate at First Orifice	0.93	GPM
Discharge Rate at Last Orifice	0.92	GPM
Percent Difference in Flow Rate First to Last Orifice	0.25	PERCENT
Total Dynamic Head Loss	35.037	FEET
Total Distribution System Flow	17.60	GPM
Volume of Distribution System	15.50	GALLONS
Pump Capacity 17.60 GPM vs	35.037	FEET OF HEAD
Volume per Dose	122.5	GALLONS
On/Off Float Swing (1,000 gal. Tank)	4.1	INCHES

PRESSURE DISTRIBUTION & MOUND DIMENSION DETAILS

CLIENT'S NAME: Huff Lot 1-4 Bedroom
DATE: 12/3/2007 PERFORMED BY: S. Revell LAG Project #: 00705

DIMENSIONS OF MOUND SYSTEM

Dimensions of Mound Sand

3.8 feet from level area to uphill sand toe

5.4 ft corner of level area to upper toe corner

7 ft wide level area

5.0 ft to side toe from upper edge of level area

5 ft wide stone bed/trench
100 ft long stone bed/trench

7.1 ft to side toe from lower edge of level area

102 ft long level area

14.4 ft corner of level area to lower toe corner

10.2 feet from level area to downhill sand toe

Dimensions of Final Cover

5.0 feet from level area to uphill toe

7.1 ft corner of level area to upper fill toe

6.5 ft to side toe from upper edge of level area

7 ft wide level area

102 ft long level area

8.6 ft to side toe from lower edge of level area

17.5 ft corner of level area to lower fill toe

12.4 feet from level area to downhill toe

PLOW AREA LAYOUT MEASUREMENTS

Center of Bed/Trench to Downslope Toe	65.4 feet
End of Level Area @ Midpoint to Downslope Toe	20.2 feet
Center of Bed/Trench to Upslope Toe	56.6 feet
End of Level Area @ Midpoint to Upslope Toe	9.9 feet

GOULDS PUMPS

Submersible Effluent Pump

MODEL 3885

WE Series

PROSURANCE AVAILABLE FOR RESIDENTIAL APPLICATIONS.

APPLICATIONS

Specifically designed for the following uses:
- Homes
- Farms
- Trailer courts
- Motels
- Schools
- Hospitals
- Industry
- Effluent systems

SPECIFICATIONS

Pump
- Solids handling capabilities: ¾" maximum.
- Discharge size: 2" NPT.
- Capacities: up to 140 GPM.
- Total heads: up to 128 feet TDH.
- Temperature: 104°F (40°C) continuous 140°F (60°C) intermittent.
- See order numbers on reverse side for specific HP, voltage, phase and RPM's available.

FEATURES

■ **Impeller:** Cast iron, semi-open, non-clog with pump-out vanes for mechanical seal protection. Balanced for smooth operation. Silicon bronze impeller available as an option.

■ **Casing:** Cast iron volute type for maximum efficiency. 2" NPT discharge.

■ **Mechanical Seal: SILICON CARBIDE VS. SILICON CARBIDE** sealing faces. Stainless steel metal parts, BUNA-N elastomers.

■ **Shaft:** Corrosion-resistant, stainless steel. Threaded design. Locknut on all models to guard against component damage on accidental reverse rotation.

■ **Fasteners:** 300 series stainless steel.

■ Capable of running dry without damage to components.

■ Designed for continuous operation when fully submerged.

MOTORS

■ Fully submerged in high-grade turbine oil for lubrication and efficient heat transfer.

■ Class B insulation on ⅓-1½ HP models.

■ Class F insulation on 2 HP models.

Single phase (60 Hz):
- Capacitor start motors for maximum starting torque.
- Built-in overload with automatic reset.
- SJTOW or STOW severe duty oil and water resistant power cords.
- ⅓ and ½ HP models have NEMA three prong grounding plugs.
- ¾ HP and larger units have bare lead cord ends.

Three phase (60 Hz):
- Class 10 overload protection must be provided in separately ordered starter unit.
- STOW power cords all have bare lead cord ends.

■ **Designed for Continuous Operation:** Pump ratings are within the motor manufacturer's recommended working limits, can be operated continuously without damage when fully submerged.

■ **Bearings:** Upper and lower heavy duty ball bearing construction.

■ **Power Cable:** Severe duty rated, oil and water resistant. Epoxy seal on motor end provides secondary moisture barrier in case of outer jacket damage and to prevent oil wicking. Standard cord is 20'. Optional lengths are available.

■ **O-ring:** Assures positive sealing against contaminants and oil leakage.

AGENCY LISTINGS

Tested to UL 778 and CSA 22.2 108 Standards By Canadian Standards Association File #LR38549

Goulds Pumps is ISO 9001 Registered.

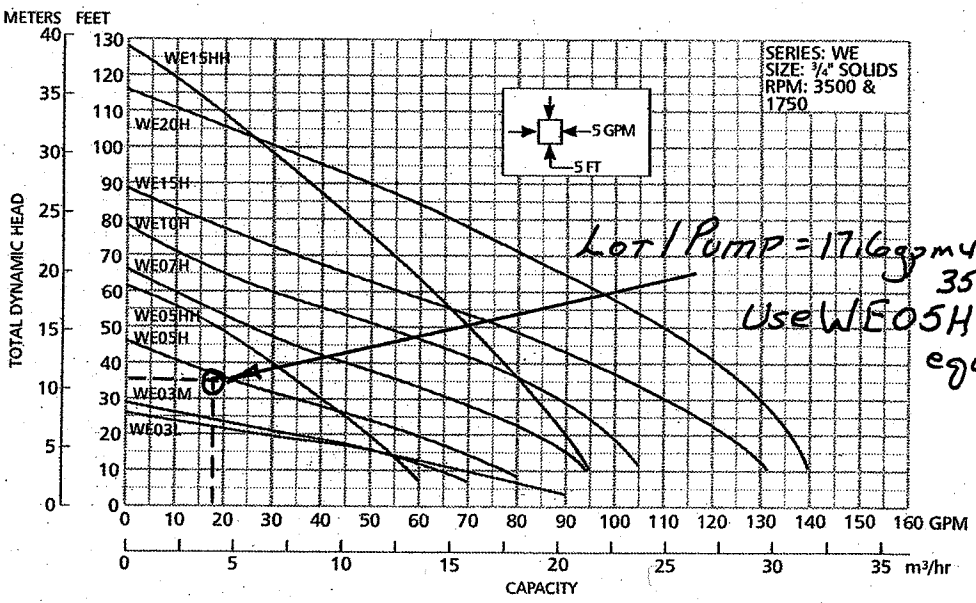

Lot / Pump = 17.6 gpm vs 35.04 TDH
Use WE05H or equal.

Goulds Pumps

ITT Industries

© 2003 Goulds Pumps
Effective July, 2003
B3885

GOULDS PUMPS

Submersible Effluent Pump

MODEL 3885

WE Series

Use WE05H

COMPONENTS

Item No.	Description
1	Impeller
2	Casing
3	Mechanical Seal
4	Motor Shaft
5	Motor
6	Ball Bearings
7	Power Cable
8	Casing O-Ring

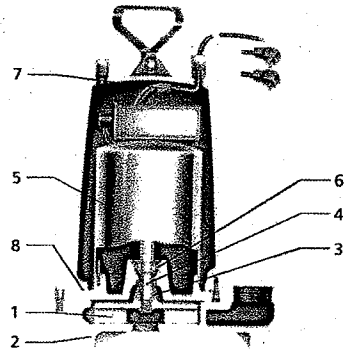

MODELS

Order No.	HP	Volts	Phase	Max. Amp.	RPM	Solids	Wt. (lbs.)
WE0311L	⅓	115	1	10.7	1750	¾"	56
WE0318L		208		6.8			
WE0312L		230		4.9			
WE0311M		115		10.7			
WE0318M		208		6.8			
WE0312M		230		4.9			
WE0511H	½	115		14.5	3500		60
WE0518H		208		8.1			
WE0512H		230		7.3			
WE0538H		200	3	4.9			
WE0532H		230		3.3			
WE0534H		460		1.7			
WE0537H		575		1.4			
WE0511HH		115	1	14.5			
WE0518HH		208		8.1			
WE0512HH		230		7.3			
WE0538HH		200	3	4.9			
WE0532HH		230		3.6			
WE0534HH		460		1.8			
WE0537HH		575		1.5			
WE0718H	¾	208	1	11.0			70
WE0712H		230		10.0			
WE0738H		200	3	6.2			
WE0732H		230		5.4			
WE0734H		460		2.7			
WE0737H		575		2.2			
WE1018H	1	208	1	14.0			
WE1012H		230		12.5			
WE1038H		200	3	8.1			
WE1032H		230		7.0			
WE1034H		460		3.5			
WE1037H		575		2.8			
WE1518H	1½	208	1	17.5			80
WE1512H		230		15.7			
WE1538H		200	3	10.6			
WE1532H		230		9.2			
WE1534H		460		4.6			
WE1537H		575		3.7			
WE1518HH		208	1	17.5			
WE1512HH		230		15.7			
WE1538HH		200	3	10.6			
WE1532HH		230		9.2			
WE1534HH		460		4.6			
WE1537HH		575		3.7			
WE2012H	2	230	1	18.0			83
WE2038H		200	3	12.0			
WE2032H		230		11.6			
WE2034H		460		5.8			
WE2037H		575		4.7			

PERFORMANCE RATINGS (gallons per minute)

Order No.		WE03L	WE03M	WE05H	WE07H	WE10H	WE15H	WE05HH	WE15HH	WE20H
	HP	⅓	⅓	½	¾	1	1½	½	1½	2
	RPM	1750	1750	3500	3500	3500	3500	3500	3500	3500
Total Head Feet of Water	5	86	–	–	–	–	–	–	–	–
	10	70	63	78	–	–	–	58	–	–
	15	52	50	70	90	–	–	53	–	–
	20	27	35	60	83	98	123	49	90	136
	25	–	–	48	76	94	117	45	87	133
	30	–	–	35	67	88	110	40	83	130
	35	–	–	20	57	82	103	35	80	126
	40	–	–	–	45	74	95	30	77	121
	45	–	–	–	35	64	86	25	74	116
	50	–	–	–	25	53	77	–	70	110
	55	–	–	–	–	40	67	–	66	103
	60	–	–	–	–	30	56	–	63	96
	65	–	–	–	–	20	45	–	58	89
	70	–	–	–	–	–	35	–	55	81
	75	–	–	–	–	–	25	–	51	74
	80	–	–	–	–	–	–	–	47	66
	90	–	–	–	–	–	–	–	37	49
	100	–	–	–	–	–	–	–	28	30

DIMENSIONS

(All dimensions are in inches. Do not use for construction purposes.)

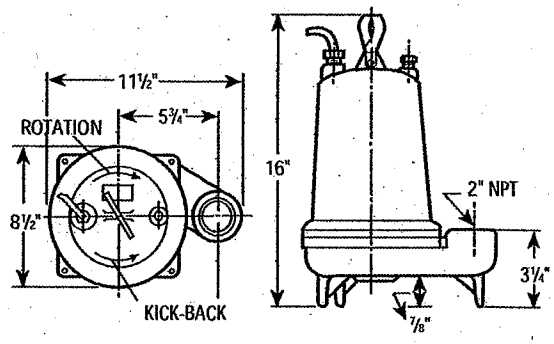

Goulds Pumps and the ITT Engineered Blocks Symbol are registered trademarks and tradenames of ITT Industries.

PRINTED IN U.S.A.

SPECIFICATIONS ARE SUBJECT TO CHANGE WITHOUT NOTICE.

Goulds Pumps

ITT Industries

WARRANTY DEED

KNOW ALL PERSONS BY THESE PRESENTS that I, **Barbara B. Horsford**, by my guardian, Lydia Hibbard, of Charlotte, in the County of Chittenden and State of Vermont ("Grantor"), in consideration of TEN AND MORE Dollars paid to my full satisfaction by **Melrose Elaine Huff** of San Benito in the County of Cameron and State of Texas ("Grantee"), by these presents, do freely GIVE, GRANT, SELL, CONVEY AND CONFIRM unto the said Grantee, Melrose Elaine Huff, a single person, and her heirs and assigns forever, a certain piece of land situated in the Town of Charlotte, in the County of Chittenden and State of Vermont, described as follows, viz:

A lot of land containing 15 acres, located on Prindle and Roscoe Roads, and more particularly described as Lot 1 on the "Property Plat Barbara Horsford Town of Charlotte Vermont Prindle Rd & Roscoe Rd" prepared by William A. Robenstein, dated June 27, 2001, approved for Subdivision by the Town of Charlotte Planning Commission on November 15, 2001, and recorded at Slide _____ of the Town of Charlotte Land Records.

Being a portion of the lands and premises conveyed to the Grantor and the late William C. Horsford by Warranty Deed of Dorothy Lupo, dated September 28, 1961 and recorded in Volume 28 at Page 163 of the Town of Charlotte Land Records.

The following easements and rights of way are conveyed herewith for the benefit of the property described herein:

Construction Easement Over Hibbard property: A non-exclusive access Easement and Right of Way over property owned now or formerly by Lydia Hibbard, all as set forth and as contemplated in an Easement Deed from Lydia Hibbard to Barbara B. Horsford dated December 13, 2001 and recorded in Volume ____, Page ____ of the Town of Charlotte Land Records.

Plan of Easements: Easements and rights of way upon the property of Grantor on a plat entitled "Property Plat Barbara Horsford Town of Charlotte Vermont Prindle Rd & Roscoe Rd" dated June 27, 2001, and prepared by William A. Robenstein, and recorded in the Town of Charlotte Land Records at Slide ___ (the "Plat").

Septic System Easement: An easement approximately 85 feet by 160 feet to construct, repair, maintain and replace a septic system for Lot 1 within the "Wastewater Disposal Area For Lot #1" as shown on the Plat. The actual location of the easement for the septic system will be based upon the wastewater disposal plans and permit approved by the Town of Charlotte. Also included is a construction easement of 25 feet around the Septic System Easement to construct, repair, maintain and replace the septic system

Construction Easement Over Lot 2: An access easement 50 feet wide over Lot 2 from the boundary of the property of the "N/F Hibbard" as shown on the

Plat to the Wastewater Disposal Area for Lot 1 for the purpose of constructing, repairing, maintaining and/or replacing the underground force main or the septic system. Grantee shall level, grade and mulch any land disturbed by Grantee's use of the Construction Easement. Grantee shall repair any damage and wear and tear to the driveway subject to the Construction Easement that is caused by Grantee's use thereof. Grantee shall not undertake the use of the easements described herein unless Grantee obtains all governmental permits and approvals required in order to do the work.

BH by LH

Force Main Easement over Lot 2 and Hibbard Property: A shared twenty foot (20') wide easement for the construction, repair, maintenance and/or replacement of an underground force main for Lot 1 as shown on the Plat. The actual location of the 20-foot wide easement for the force mains shall be determined by the centerline of the as built location of the force mains. Prior to the initial installation of the trench for the force mains on the property of the "N/F Hibbard" as shown on the Plat, the Grantee shall propose the location of the force mains to the owner of such property for approval, which approval shall not be unreasonably withheld or delayed. Grantee shall attempt to blend the location of the force mains with the surrounding area in as natural a state as possible. Grantor shall have the right to use the easement area for all purposes not inconsistent with the force main easement but may not plant trees or shrubs or use heavy equipment within the easement area which may damage the force mains.

Cost Sharing for Shared Septic Easement: The shared septic easement and right of way shall be shared from the area of the "Meadow" on Lot 2, as shown on the Plat, to the Lot 1 Wastewater Disposal Area. Within the shared portion of the Force Main Easement, Lots 1 and 2 shall jointly use such area for the construction, repair, maintenance and/or repair of underground force mains.

It is hereby specifically contemplated that the Grantor and Grantee shall lay separate force mains, in a common trench within the shared portion of the Force Main Easement. Grantor and Grantee shall make reasonable efforts to carry out and coordinate the construction, repair, maintenance and/or repair of their respective underground force mains within the shared portion of the Force Main Easement. The cost of the excavation of the trench, the laying of the two force mains, the filling of the trench and the grading, seeding and mulching of the disturbed portion of shared easement ("construction of the common portion") shall be borne equally by the owners of Lot 1 and Lot 2. If one of the parties sharing the Force Main Easement shall wish to undertake construction of the common portion in order to develop such party's lot prior to the time the other party wishes to develop the other lot, then the first party shall construct the common portion (and if the owner of Lot 2 is the first party such owner may construct the force mains for Lot 1 from the shared portion to the boundary of Lot 1). The other owner shall not connect to the force mains pipe installed as part of construction of the common portion until such other owner has paid the first owner one–half (½) of the estimate for construction of the common portion. Such

estimate shall be obtained by the other owner and calculated at the time the other owner wishes to connect to the previously installed force main and shall reasonably reflect the cost of installing the force mains at that time. A record of such payment shall be recorded in land records of the Town of Charlotte.

The ongoing maintenance, replacement and/ or repair of either of the separate force mains within the shared portion of the Force Main Easement shall be coordinated with the other party, and the cost shared only to the extent that the repair, or maintenance is needed for both force mains. In the event the maintenance and repair is required only for one of the lines, the work shall be coordinated with the other lot owner, but the cost borne solely by the owner of the system in need of repair.

Common Driveway Easement: A sixty foot (60') wide easement for the construction, repair, maintenance and/or repair of a shared driveway and utilities over, under and upon Lot 2 to serve Lots 1 and 2 within the easement area shown on the Plat. The driveway shall be shared by Lots 1 and 2 from Prindle Road for a distance of up to three hundred feet (300') with the actual distance being measured from Prindle Road ~~by~~ to the location of where the driveway for Lot 1 separates from the common driveway when built.

BH by LH

Cost Sharing for Common Driveway: The cost of the construction of the shared portion of the driveway shall be borne equally by the owners of Lot 1 and Lot 2. If one of the parties shall wish to undertake construction of the shared driveway in order to develop such party's lot prior to the time the other party wishes to develop the other lot, then the first party may proceed to undertake construction of the common portion. The other owner shall not utilize the common driveway until such other owner has paid the first owner one–half (½) of the estimated per linear foot cost for construction of the shared portion of the driveway. Such estimate shall be obtained by the other owner for the cost of construction of a shared portion of the driveway and shall be priced on a linear foot basis for a typical twelve foot (12') wide gravel topped driveway with construction typical for such driveways in the Town of Charlotte at the time the second party wishes to utilize the common portion. (By way of example only if the shared portion of the driveway is estimated to cost $20 per linear foot and the shared portion of the driveway is 100 feet then the reimbursement would be $1000 (100 x $20 divided by 2). A record of such payment shall be recorded in the land records of the Town of Charlotte.

The ongoing maintenance, replacement and/ or repair of the shared portion of the driveway shall be coordinated with the other party, and the cost shared equally. In the event the maintenance and repair of the shared portion of the driveway is required as a result of the actions or activities of the owner of one Lot or their contractors, employees or invitees the cost of such repair shall be undertaken promptly by and at the sole expense of the responsible party.

Dispute Resolution: In the event there is a dispute between the parties about any aspect of either of the easement, including but not limited to the location, costs or any other aspect of the construction, repair, maintenance and/or repair of the improvements in any of the easements, the parties agree to resolve their dispute as follows:

The dispute resolution procedures of this Paragraph shall be the exclusive mechanism to resolve disputes between the parties.

Any dispute between the parties shall in the first instance be the subject of informal negotiations between the parties to the dispute. The period for informal negotiations shall not exceed 10 days from the time the dispute arises, unless it is modified by written agreement of the parties. The dispute shall be considered to have arisen when one party receives a written Notice of Dispute sent by the other party. In the event that the parties cannot resolve a dispute by informal negotiations then either party may within 10 days after the conclusion of the informal negotiation period, invoke the formal dispute resolution procedures by serving on the other party a written request for arbitration.

In the event the parties cannot agree to an arbitrator, the arbitrator shall be selected as follows: within 10 days of the date of the written request for arbitration the parties shall exchange a list of three acceptable and qualified arbitrators and the first person to appear on both lists shall be selected as the arbitrator. A "qualified arbitrator" is one who is a Chittenden County licensed engineer. In the event the selected arbitrator declines to undertake the arbitration or if no arbitrator appears on both lists, the parties shall promptly submit new lists with three different qualified arbitrators not on their prior lists until an arbitrator is selected.

An administrative record of the arbitration shall be maintained by the arbitrator and shall contain all statements of positions of the parties, including supporting documentation. The decision of the arbitrator shall be binding upon the parties, subject only to the right to seek judicial review below.

Any decision made by the arbitrator shall be reviewable by the Superior Court of Chittenden County, Vermont, provided that a notice of judicial appeal is served on all parties and the arbitrator within 10 days of receipt of the final decision of the arbitrator. The notice of judicial appeal shall include a description of the matter in dispute, the efforts made by the parties to resolve it, and the relief requested. The non-appealing party may file within 30 days a response to the notice of judicial appeal. In proceedings on any dispute, the appealing party shall have the burden of demonstrating that the decision of the arbitrator was arbitrary or capricious or otherwise not in accordance with law. Judicial review of the decision by the arbitrator shall be on the administrative record.

Reference is hereby made to the above-mentioned instruments, the records thereof, the references therein made, and their respective records and references, in further aid of this description.

TO HAVE AND TO HOLD said granted premises, with all the privileges and appurtenances thereof, to the said Grantee, Melrose Elaine Huff, a single person, and her heirs and assigns, to her own use and behoof forever; and I, the said Grantor, Barbara B. Horsford, for myself and my heirs, executors and administrators, do covenant with the said Grantee, Melrose Elaine Huff, and her heirs and assigns, that until the ensealing of these presents I am the sole owner of the premises, and have good right and title to convey the same in manner aforesaid; that they are FREE FROM EVERY ENCUMBRANCE, except as aforesaid; and I do hereby engage to WARRANT AND DEFEND the same against all lawful claims whatever, except as aforesaid.

IN WITNESS WHEREOF, I hereunto set my hand and seal this 13th day of December, 2001.

In the Presence of:

Catherine Kronk

Witness
Print Name: CATHERINE KRONK

Barbara Horsford by Lydia Hibbard, Lt. Financial Guardian

Barbara B. Horsford, by her guardian,
Lydia Hibbard

State of Vermont
County of Chittenden, ss.

At Burlington, in said County, this 13th day of December, 2001, personally appeared Lydia Hibbard, and she acknowledged this instrument, by her sealed and subscribed, to be her free act and deed and the free act and deed of Barbara B. Horsford.

Before me, Catherine Kronk
Notary Public
Print Name: CATHERINE KRONK
My commission expires: 2·10·03

270352_v1: 2378-00003

CHARLOTTE TOWN CLERK'S OFFICE
RECEIVED FOR RECORD
This 19th day of December A.D. 2001
at 2 o'clock 30 minutes P m and
recorded in vol. 122 on page 17-20
Attest Mary A Mead Town Clerk

ACKNOWLEDGEMENT
Return Received (including Certificates and, if Required, Act 250 Disclosure Statement) and Tax Paid.
Signed Mary A Mead Clerk
Date December 19, 2001

CHARLOTTE PLANNING COMMISSION

FINDINGS OF FACT AND DECISION
IN RE APPLICATION OF

Melrose Huff
Subdivision Modification
Application # PC-04-05

CHARLOTTE TOWN CLERK'S OFFICE
RECEIVED FOR RECORD
This 5 day of March A.D. 2004
at 1 o'clock 25 minutes 4 m and
recorded in vol. 147 on page 224-25
Attest Marlene C Mansfield Town Clerk
ASST

Background

The subject parcels are both owned by Melrose Huff. Lot 1 was created by a subdivision of the Barbara Horsford property in November 2001. Lot 3 is a pre-existing lot. The purpose of this application is to reconfigure the boundary line between these lots, adding 9.4 acres to Lot 3 from Lot 1.

Sketch Plan Review was held on June 6, 2002, at which time the project was classified as a Subdivision Modification because it proposes modifications to an approved subdivision (or portion thereof). An additional application (PC-04-04) was reviewed by the Planning Commission on February 5th 2004 involving Lot 1 and Lot 2 (owned by Kathleen Mushkat). The decision for that application is being rendered in a separate Findings of Fact and Decision.

Application

The application consists of:

1. An application form and appropriate fee.
2. A survey map entitled "Boundary Line Adjustment, Melrose Huff, Town of Charlotte Vermont, Prindle Road & Roscoe Road" by William A. Robenstein dated 5/29/2003, revised 9/28/2003.
3. A letter from Melrose Huff to the Charlotte Planning Commission dated October 17, 2003 stating that Liam Murphy is authorized to sign for her in all matters before the Planning Commission.
4. A letter from Melrose Huff to Dean Bloch dated January 16, 2004 stating that Liam Murphy is authorized to file applications on her behalf, to appear before Town boards as her sole representative, and to execute any documents on her behalf required in connection with any actions before any Town board.

Public Hearing

A public hearing was held for this application on February 5, 2004. Liam Murphy was present representing Melrose Huff. Adjoining property owner Kathleen Mushkat was also present.

Regulations in Effect

Town Plan as amended March 2002
Zoning Bylaws as amended March 2002
Subdivision Bylaws as amended March 1995

Findings

1. Chapter XIII Section 6 of the Subdivision Bylaws requires an application to the Planning Commission for a modification to a subdivision, but this section does not provide clear standards of review for such an application. However the provisions of Chapter III Section 4 (Boundary Adjustment) can clearly be looked to for guidance.
2. Chapter III Section 4 of the Subdivision Bylaws requires: 1) that the action does not create any new lots, 2) that the action will not impact access to any parcel, 3) that it will not adversely impact any significant natural resources, and 4) that it will not create a non-complying lot.
3. The proposed modification (as depicted in the survey submitted with this application) meets these standards. However, it's recognized that with the increase in the size of Lot 3, the current or future owner of Lot 3 may want to relocate the existing dwelling or build a new dwelling in a different location on that lot. This could potentially impact resources on the lot in ways that have not been considered within the current review, since such a relocation was not proposed by the current application.

Decision

Based on these Findings, the Planning Commission approves the application for a Subdivision Modification with the following conditions:

1. The survey will be amended as follows:
   A. The table indicating existing lot sizes, proposed changes and new lot sizes will be corrected (ie: proposed change is 9.94 acres).
   B. A 20' wide septic line easement will be depicted over Lot 3 in favor of Lot 1, as indicated on the wastewater disposal plans by Ridge Consulting Engineers entitled "Subdivision Plan, Barbara Horsford, Prindle Road, Charlotte, Vermont" dated 12/03/01, last revised 12/14/01.
   C. The title will be amended to "Subdivision Modification".
2. A mylar (18" x 24") of the survey (as amended in Condition 1 above) will be submitted to the Planning Commission for review within 60 days, and recorded in the Town Land Records within 90 days.
3. A Subdivision Amendment is required prior to any relocation of the existing dwelling or the construction of a new dwelling on Lot 3.

Additional Conditions: All plats, plans, drawings, testimony, evidence and conditions listed above or submitted at the hearing and used as the basis for the Decision to grant

permit shall be binding on the applicant, and his/her/its successors, heirs and assigns. Projects shall be completed in accordance with such approved plans and conditions. Any deviation from the approved plans shall constitute a violation of permit and be subject to enforcement action by the Town.

You and any interested parties are entitled to appeal this decision to the Environmental Court within 30 days of the date of 4th signature below approving this decision, as per requirements of 24 VSA Chapter 117, Sections 4471 and 4475.

Members Present at the Public Hearing on February 5th: Jeff McDonald, Al Moraska, Jim Donovan, Gordon Troy, Linda Radimer and John Owen.

Vote of Members after Deliberations:
The following is the vote for or against the application, with conditions as stated in this Decision:

1. Signed: Al Moraska (For) / Against Date: 3/4/04
2. Signed: [illegible] (For) / Against Date: 3/4/04
3. Signed: [illegible] (For) / Against Date: 3/4/04
4. Signed: Linda Radimer (For) / Against Date: 3-4-04
5. Signed: _____ For / Against Date: _____
6. Signed: _____ For / Against Date: _____
7. Signed: _____ For / Against Date: _____

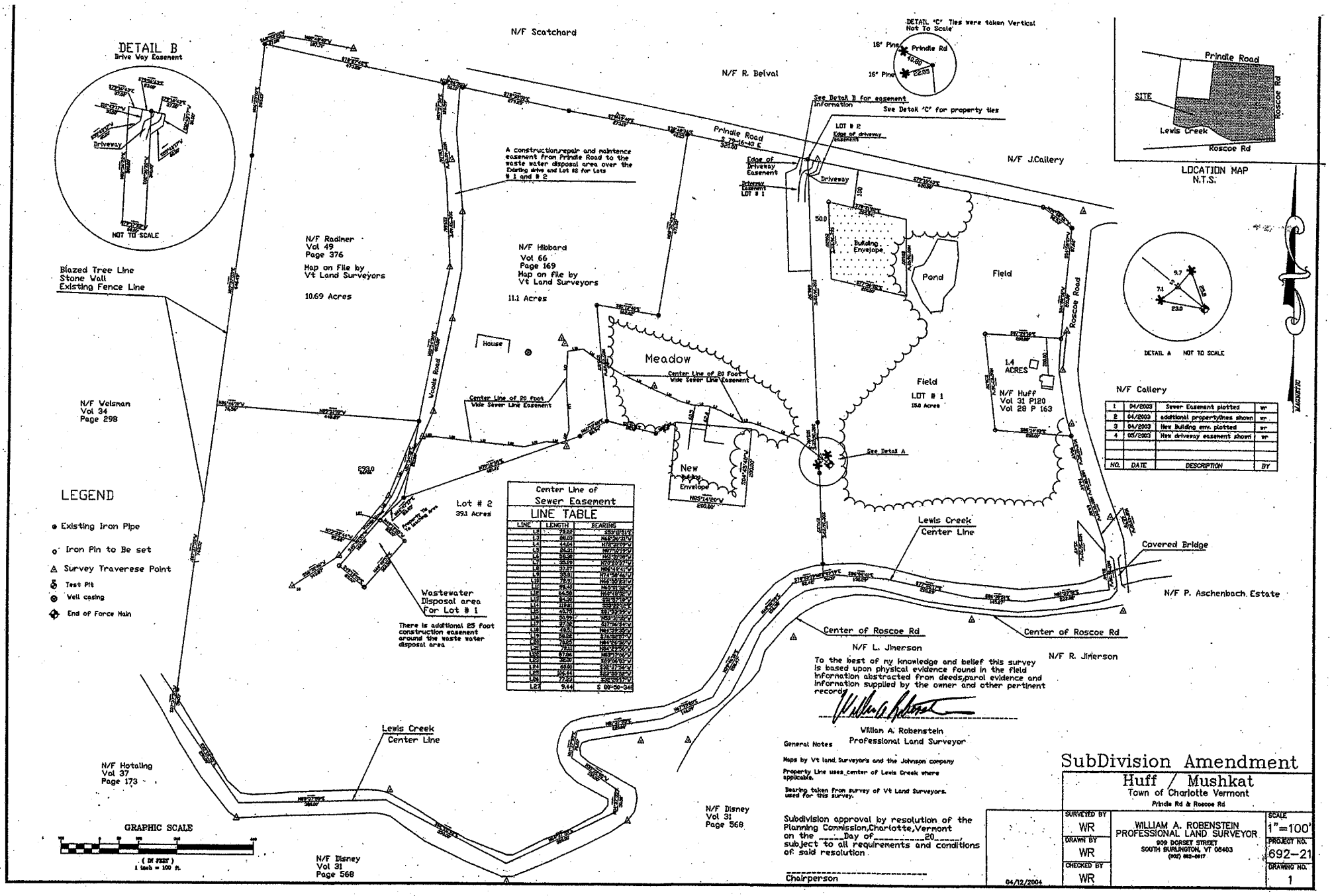

Center Line of Sewer Easement

LINE TABLE

LINE	LENGTH	BEARING
L1	78.02	S53°11'51"E
L2	86.03	N62°30'21"W
L3	14.04	N72°21'09"W
L4	54.31	N67°10'19"W
L5	58.30	N61°11'09"W
L6	25.50	N77°21'27"W
L7	37.67	N86°12'11"W
L8	33.51	N71°49'46"W
L9	17.21	N62°55'21"W
L10	98.40	N63°11'55"W
L11	64.50	N63°17'05"W
L12	34.20	S51°17'19"W
L13	119.81	S52°22'15"W
L14	24.29	S51°37'37"W
L15	20.00	N53°31'00"W
L16	37.09	S17°54'11"W
L17	14.53	N62°35'35"W
L18	24.52	S74°55'27"W
L19	78.57	N64°11'55"W
L20	77.31	N63°11'55"W
L21	87.86	N63°11'05"W
L22	30.06	S69°38'10"W
L23	44.60	S51°17'35"W
L24	124.11	S52°35'18"W
L25	77.57	S56°05'17"W
L26	9.44	S 00°50'34"

To the best of my knowledge and belief this survey is based upon physical evidence found in the field information abstracted from deeds,parol evidence and information supplied by the owner and other pertinent records.

William A. Robenstein
Professional Land Surveyor

General Notes

Maps by Vt land Surveyors and the Johnson company

Property Line uses center of Lewis Creek where applicable.

Bearing taken from survey of Vt Land Surveyors. used for this survey.

Subdivision approval by resolution of the Planning Commission,Charlotte,Vermont on the _____Day of_____20_____, subject to all requirements and conditions of said resolution

_____
Chairperson

NO.	DATE	DESCRIPTION	BY
1	04/2003	Sewer Easement plotted	wr
2	04/2003	additional propertylines shown	wr
3	04/2003	New Building env. plotted	wr
4	05/2003	New driveway easement shown	wr

SubDivision Amendment

Huff / Mushkat

Town of Charlotte Vermont

Prindle Rd & Roscoe Rd

04/12/2004

SURVEYED BY: WR
DRAWN BY: WR
CHECKED BY: WR

WILLIAM A. ROBENSTEIN
PROFESSIONAL LAND SURVEYOR
909 DORSET STREET
SOUTH BURLINGTON, VT 05403
(802) 862-0617

SCALE: 1"=100'
PROJECT NO. 692-21
DRAWING NO. 1

General Notes

1 Maps by Vt land Surveyors and the Johnson company
2 Property Line uses center of Lewis Creek where applicable.
4 Bearing taken from survey of Vt Land Surveyors, used for this survey.
6 Reference is made to water line easements in Volume 28 Page 163 The location which can not be determined
7 Reference is made to Property Plat ' Barbara Horsford' Dated 6/27/2001 with a latest revised date of 05/2003
8 No changes made to Lot 2 (39.1 Acres)
9 Sewer Easement information shown on Property Plat Barbara Horsford dated 06/27/2001

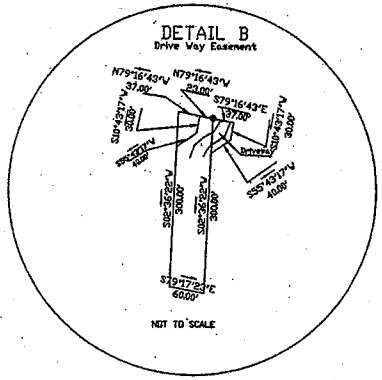

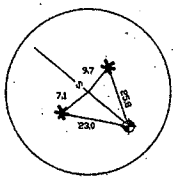

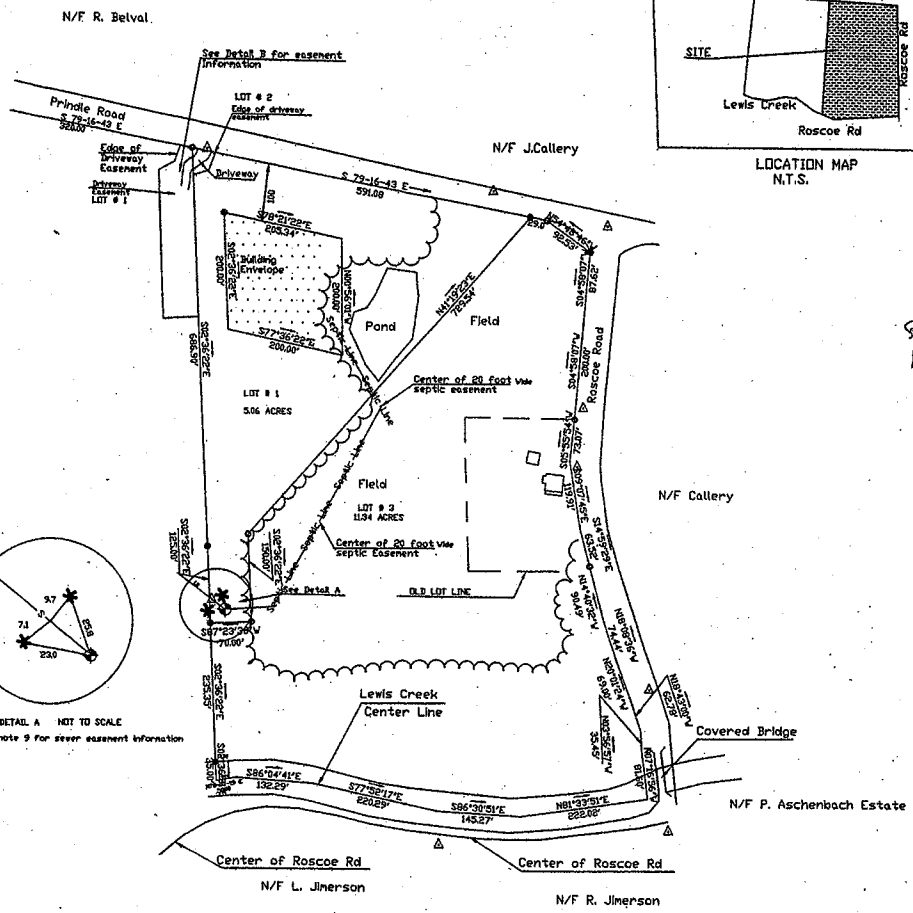

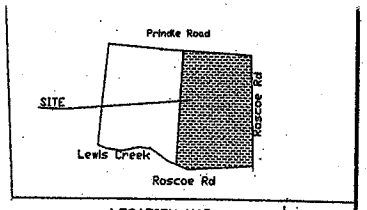

LOCATION MAP
N.T.S.

Subdivision approval by resolution of the Planning Commission,Charlotte,Vermont on the _____Day of_____20_____, subject to all requirements and conditions of said resolution

_____
Chairperson

	LOT # 1	LOT # 3
Existing Lot Size	15.0 Acres	14 Acres Vol 31 page 129 Vol 28 page 163
Proposed Changes	9.94 Acres	9.94 Acres
New Size	5.06 Acres	11.34 Acres

LEGEND

- Existing Iron Pipe
- Iron Pin to Be set
- Survey Traverese Point
- Test Pit
- Well casing
- End of Force Main

GRAPHIC SCALE

(IN FEET)
1 inch = 100 ft.

NO.	DATE	DESCRIPTION	BY
1	09/28/2003	Lots relabled	WR
2	09/28/2003	Table added	WR
3	09/28/2003	points set	WR

To the best of my knowledge and belief this survey is based upon physical evidence found in the field information abstracted from deeds,parcl evidence and information supplied by the owner and other pertinent records

William A. Robenstein
Professional Land Surveyor

SubDivision Modification

Melrose Huff

Town of Charlotte Vermont

Prindle Road & Roscoe Road

04/12/2004
09/28/2003
04/12/2004

SURVEYED BY WR	WILLIAM A. ROBENSTEIN PROFESSIONAL LAND SURVEYOR 908 DORSET STREET SOUTH BURLINGTON, VT 05403 (802) 862-8817	SCALE 1"=100'
DRAWN BY WR		PROJECT NO. 771-23
CHECKED BY WR		DRAWING NO. 1

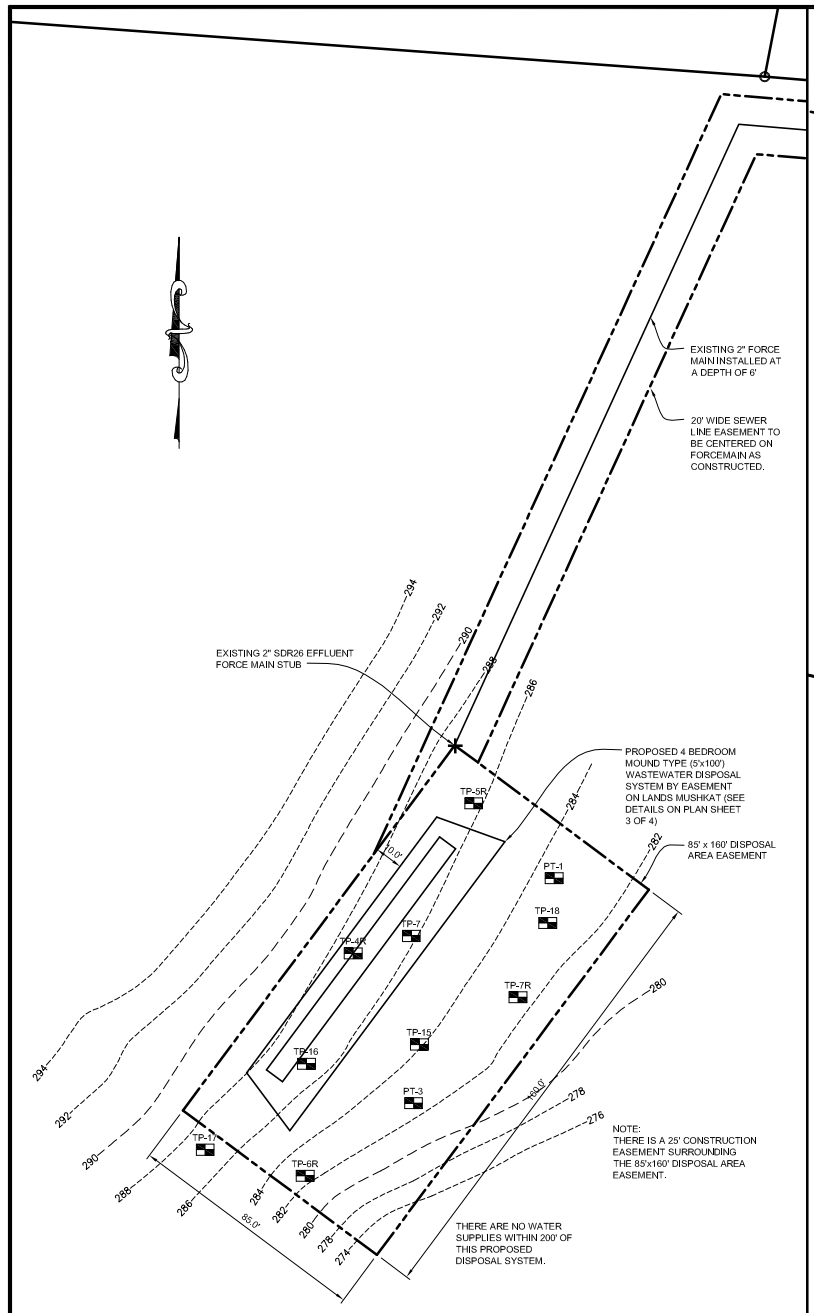

LEGEND

292	EXISTING CONTOUR LINE
	EDGE OF GRAVEL DRIVE
W	EXISTING WATER SERVICE
	EDGE OF GRAVEL DRIVE
	EXISTING PROPERTY LINE
	EXISTING TREELINE
	EXISTING SWALE/STREAM
	EDGE OF POND
	IRON PIPE FOUND
TP-1/PT-1	TEST PIT/PERC TEST
	TRAVERSE POINT
	UTILITY POLE
W	WELL - DRILLED

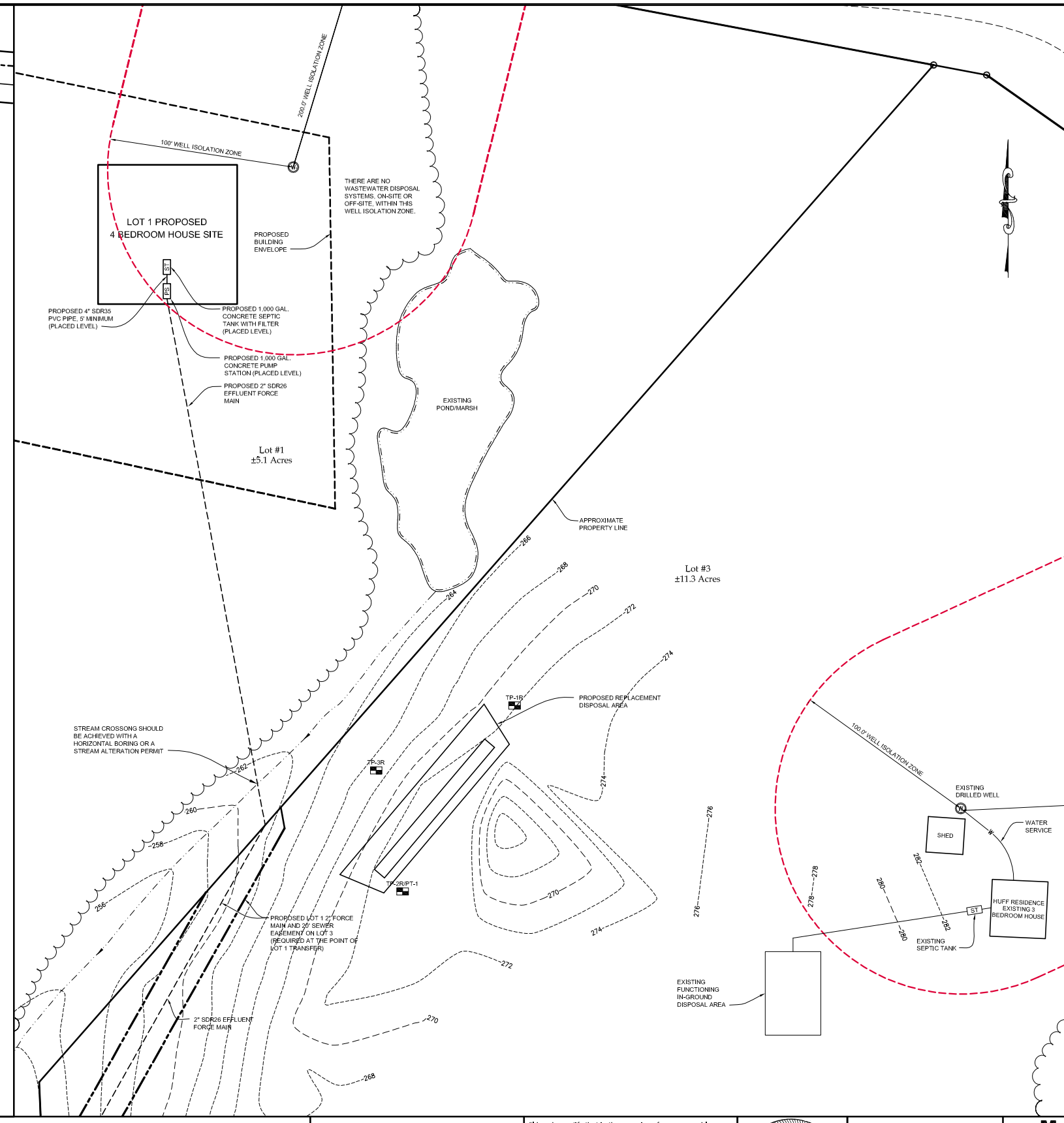

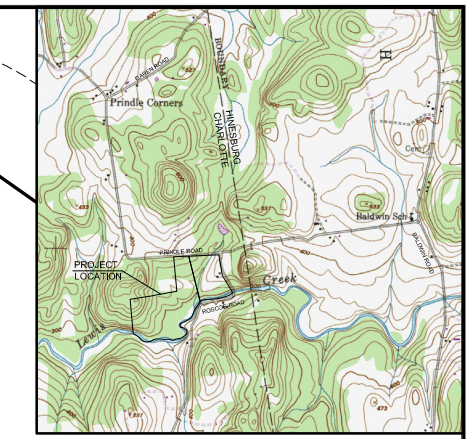

GENERAL LOCATION MAP

SCALE: 1"=2,000'±

GRAPHIC SCALE
(IN FEET)
30 0 15 30 60 120
1"=30'

THE CONTRACTOR SHALL NOTIFY "DIGSAFE" AT 1-888-DIG-SAFE PRIOR TO ANY EXCAVATION.

No.	Revision	Date

It is the user's responsibility to ensure this copy contains the latest revisions

"I hereby certify that in the exercise of my reasonable professional judgment the design-related information submitted with this application is true and correct, and that the design included in this application for a permit complies with the Vermont Wastewater System and Potable Water Supply Rules and the Vermont Water Supply Rules."

Stephen Revell, CPG — Date
Licensed Class B Designer #178

AMERICAN INSTITUTE OF PROFESSIONAL GEOLOGISTS — CERTIFICATE NUMBER 6259 — AIPG — STEPHEN REVELL — CERTIFIED PROFESSIONAL GEOLOGIST

LINCOLN APPLIED GEOLOGY, INC.
Environmental Consultants
159 Rivers Edge Drive, Lincoln, Vermont 05443
(802) 453-4189 (802) 434-2489 (fax)
Web: www.lagvt.com E-Mail: lag@lagvt.com

Melrose Huff Property

88 Roscoe Road
Charlotte, Vermont

Enlarged Site Plan
Lot 1 and Lot 3 Showing
Proposed Wastewater Disposal Systems

LAG PROJECT #	00705
DATE	12-03-2007
SURVEYORS	JS/SR
DRAWN	LAG
PLAN SHEET #	2 of 4

CONSTRUCTION SPECIFICATIONS - MOUND

1. MOUND CONSTRUCTION PROCEDURES ARE JUST AS IMPORTANT AS THE MOUND DESIGN. GOOD DESIGN WITH POOR CONSTRUCTION WILL RESULT IN THE MOUND OPERATING POORLY AND MAY RESULT IN FAILURE. PROPER EQUIPMENT IS ESSENTIAL. SMALL TRACK TYPE EXCAVATORS WORK BEST. WHEEL TYPE TRACTORS ARE TOO DIFFICULT TO MANEUVER IN THE FILL. THE FOLLOWING IS A STEP-BY-STEP PROCEDURE FOR MOUND CONSTRUCTION, WHICH HAS BEEN TRIED AND PROVEN. OTHER TECHNIQUES COULD BE USED AS LONG AS THE BASIC PRINCIPLES OF MOUND DESIGN, OPERATION, AND CONSTRUCTION ARE NOT VIOLATED.

2. SUBMIT A REPRESENTATIVE SAMPLE (ENOUGH TO FILL A 5 GALLON BUCKET) OF MOUND SAND FROM THE INTENDED SOURCE FOR TESTING ACCORDING TO ASTM D 422 (KNIGHT CONSULTING ENGINEERS, PHELPS ENGINEERING, OTTER CREEK ENGINEERING, AND VERMONT TESTING CAN ALL PERFORM THIS TEST). SUBMIT A COPY OF THE RESULTS TO THE DESIGNER PRIOR TO INITIATING CONSTRUCTION.

3. STAKE OUT THE MOUND ON THIS SITE SO THAT THE TRENCHES OR BED RUN PERPENDICULAR TO THE DIRECTION OF THE SLOPE. REFERENCE STAKES ARE RECOMMENDED IN CASE CORNER STAKES ARE DISTURBED. LINCOLN APPLIED GEOLOGY, INC., MUST STAKEOUT OR VERIFY THIS TASK.

4. STAKE OUT CORNERS OF THE BED AND DETERMINE THE BOTTOM ELEVATION OF THE BED.

5. DETERMINE WHERE THE FORCE MAIN FROM THE PUMP CHAMBER CONNECTS TO THE DISTRIBUTION SYSTEM IN THE MOUND.

6. TRENCH AND LAY THE FORCE MAIN FROM THE PUMP CHAMBER TO THE MOUND. LAY THE PIPE 5' BELOW THE GROUND SURFACE FOR FROST PROTECTION. WHERE THERE IS LESS THAN 5' OF COVER, INSULATE WITH 2" OF RIGID POLYSTYRENE INSULATION 4' WIDE (2' EITHER SIDE OF PIPE, PLACED IN TWO 1" LAYERS WITH STAGGERED JOINTS). CUT AND CAP THE PIPE 1' BENEATH THE GROUND SURFACE. BACKFILL AND COMPACT SOIL AROUND PIPE TO PREVENT BACK SEEPAGE OF EFFLUENT ALONG PIPE. THIS STEP MUST BE DONE BEFORE PLOWING TO AVOID COMPACTING AND DISTURBANCE OF SURFACE.

7. INSTALL THE CURTAIN DRAIN (IF SHOWN ON PLANS).

8. CHECK THE MOISTURE CONTENT OF THE SOIL AT 7 - 8" DEEP. IF IT IS TOO WET, SMEARING AND COMPACTION WILL RESULT, THUS REDUCING THE INFILTRATION CAPACITY OF THE SOIL. SOIL MOISTURE CAN BE DETERMINED BY ROLLING A SOIL SAMPLE BETWEEN THE HANDS. IF IT ROLLS INTO A RIBBON, THE SITE IS TOO WET TO PREPARE. IF IT CRUMBLES, SOIL PREPARATION CAN PROCEED.

9. CUT TREES TO GROUND LEVEL. REMOVE EXCESS VEGETATION BY MOWING. DO NOT REMOVE STUMPS. PREPARE THE SITE BY USING A MOLDBOARD PLOW TO CREATE 8 - 10" DEEP FURROWS PERPENDICULAR TO THE SLOPE. FURROWS MUST BE THROWN UP HILL. CHISEL PLOWING MAY BE USED IF A MOLDBOARD PLOW IS NOT AVAILABLE. ROTOTILLING MUST NOT BE DONE ON HEAVY SOILS BUT CAN BE USED ON NON-STRUCTURAL SOIL SUCH AS SANDS. ALTERNATIVELY, PLOWING CAN BE DONE BY USING AN EXCAVATOR BUCKET TO PULL THE SOIL INTO FURROWS PARALLEL WITH THE GROUND CONTOURS (THE RESULTING SURFACE MUST LOOK AS THOUGH IT HAD BEEN PLOWED WITH A MOLDBOARD PLOW, AS OUTLINED ABOVE). IMMEDIATE CONSTRUCTION AFTER PLOWING IS NECESSARY. AVOID RUTTING OF PLOWED AREA WITH VEHICULAR TRAFFIC. DESIGNER INSPECTION REQUIRED AT THIS POINT.

10. EXTEND THE EFFLUENT PIPE TO SEVERAL FEET ABOVE THE GROUND SURFACE.

11. PLACE THE APPROVED FILL MATERIAL AROUND THE EDGE OF THE PLOWED AREA. KEEP WHEELS OF TRUCK OFF PLOWED AREAS. MINIMIZE TRAFFIC ON THE DOWNSLOPE SIDE OF THE MOUND. WORK FROM THE END AND UPSLOPE SIDE.

12. MOVE THE FILL MATERIAL INTO PLACE USING A SMALL TRACK TYPE TRACTOR WITH A BLADE. ALWAYS KEEP A MINIMUM OF 6 INCHES OF SAND BENEATH TRACKS TO PREVENT COMPACTION OF THE NATURAL SOIL.

13. PLACE THE FILL MATERIAL TO THE REQUIRED DEPTH, WHICH IS THE TOP OF THE TRENCHES OR BED. SHAPE SIDES TO THE DESIRED SLOPE. INSPECTION REQUIRED AT THIS POINT.

14. WITH THE BLADE OF THE TRACTOR FORM THE BED OR TRENCHES. HAND LEVEL THE BOTTOM OF THE BED. MAKE SURE BOTTOM IS AT THE SAME ELEVATION AND LEVEL.

15. PLACE THE COARSE AGGREGATE IN THE TRENCHES OR BED. IT SHOULD BE ¾ TO 1½", WASHED, DURABLE AGGREGATE (I.E. NOT LIMESTONE OR MARBLE). LEVEL AGGREGATE TO THE DESIGN DEPTH.

16. PLACE THE DISTRIBUTION SYSTEM ON THE AGGREGATE. CONNECT THE MANIFOLD TO THE FORCE MAIN FROM THE PUMP CHAMBER OR SIPHON CHAMBER. SLOPE MANIFOLD SLIGHTLY TOWARD DISTRIBUTION LATERALS. LAY LATERALS LEVEL, REMOVING RISES AND DIPS. PLACE ORIFICES UPWARDS. INSPECTION REQUIRED AT THIS POINT (TO OBSERVE DISCHARGE RATE AND PRESSURE TESTING).

17. PLACE SHIELDS ON ORIFICES AND PROPERLY CEMENT ALL COMPONENTS. PLACE 2" OF AGGREGATE OVER THE DISTRIBUTION PIPE.

18. PLACE A SYNTHETIC NON-WOVEN FILTER FABRIC (MIRAFI 140N OR EQUIVALENT) OVER THE ENTIRE STONE BED. OVERLAP JOINTS BY 12" MINIMUM. PLACE AN 8' X 8' MAT OF RIGID POLYSTYRENE INSULATION, 2" THICK, CENTERED OVER FORCE MAIN RISER. PLACE INSULATION IN TWO LAYERS (1" EACH) AND STAGGER THE JOINT PATTERN.

19. PLACE SOIL ON TOP OF THE BED OR TRENCH TO A DEPTH OF 1' IN CENTER AND 6" AT OUTER EDGE OF BED OR TRENCHES. THIS MAY BE A SUBSOIL OR TOPSOIL.

20. PLACE 6" OF GOOD QUALITY TOPSOIL OVER THE ENTIRE MOUND SURFACE. THIS WILL RAISE THE ELEVATION AT THE CENTER OF THE MOUND TO A MINIMUM OF 1.5' AND THE OUTSIDE EDGES OF BED OR TRENCHES 1'. INSPECTION REQUIRED AT THIS POINT.

21. LANDSCAPE THE MOUND BY PLANTING GRASS, USING THE BEST VEGETATION ADAPTABLE TO THE AREA. A MIXTURE OF 90% BIRDSFOOT TREEFOIL AND 10% TIMOTHY MAY BE DESIRABLE IF THE MOUND IS NOT MANICURED. IF MANICURING IS DESIRED, A COMBINATION OF 60% BLUEGRASS, 30% CREEPING RED FESCUE AND 10% ANNUAL RYE GRASS MAY BE THE DESIRED VEGETATIVE COVER. SHRUBS CAN BE PLANTED AROUND THE BASE AND UP THE SIDESLOPES. THEY SHOULD BE SOMEWHAT MOISTURE TOLERANT SINCE THE TOE OF THE MOUND MAY BE SOMEWHAT MOIST DURING VARIOUS TIMES OF THE YEAR. KEEP ALL TREES AND SHRUBS AWAY FROM THE TOP OF THE MOUND, AS ROOT SYSTEMS CAN DESTROY THE DISTRIBUTION NETWORK.

22. MOUND MAINTENANCE INVOLVES PUMPING THE SEPTIC TANK AND PUMP CHAMBER EVERY 1 TO 3 YEARS TO AVOID CARRYOVER OF SOLIDS INTO THE MOUND. A GOOD WATER CONSERVATION PLAN WITHIN THE HOUSE ASSURES THAT THE MOUND WILL NOT BE OVERLOADED. AVOID EXCESS TRAFFIC ON THE MOUND AREA. WINTER TRAFFIC ON MOUND SHOULD BE AVOIDED TO MINIMIZE FROST PENETRATION. INSPECT PUMP CHAMBER AND SEPTIC TANK EACH YEAR TO DETERMINE THE LEVEL OF SLUDGE ACCUMULATION. MOW TWICE A YEAR.

23. UTILITIES INFORMATION SHOWN ON THIS PLAN WAS OBTAINED FROM AVAILABLE SOURCES AND MAY OR MAY NOT BE EITHER ACCURATE OR COMPLETE. THE CONTRACTORS SHALL VERIFY EXACT LOCATION OF EXISTING UTILITIES AND SHALL BE RESPONSIBLE FOR ANY DAMAGE TO ANY UTILITY, PUBLIC OR PRIVATE, SHOWN OR NOT SHOWN ON THIS PLAN.

24. ALL FILL AROUND THE STRUCTURES SHALL BE PLACED IN 12" LIFTS AND THOROUGHLY COMPACTED TO 95% OF MAXIMUM DENSITY AT OPTIMUM MOISTURE CONTENT.

25. THIS DESIGN MUST BE INSPECTED BY LINCOLN APPLIED GEOLOGY, INC., LINCOLN, VERMONT, TO ENSURE COMPLIANCE WITH THESE PLANS. LINCOLN APPLIED GEOLOGY, INC., WAIVES ANY AND ALL RESPONSIBILITY AND LIABILITY FOR PROBLEMS THAT ARISE FROM FAILURE TO FOLLOW SPECIFICATIONS, AND THE DESIGN INTENT THAT THE PLANS CONVEY, AND FROM FAILURE TO HAVE BEEN NOTIFIED BY THE CONTRACTOR FOR INSPECTIONS.

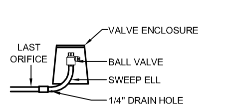

FLUSHING VALVE DETAIL

NOT TO SCALE

SEPTIC TANK
OPERATION & MAINTENANCE RECOMMENDATIONS

1. THE SEPTIC TANK'S PURPOSE IS TO SETTLE OUT SOLIDS, CONTAIN THE SCUM AND PASS TREATED EFFLUENT. BACTERIA WITHIN THE SEPTIC TANK HELPS DECOMPOSE THE SOLIDS. SHOULD ANY SOLIDS PASS THROUGH THE SEPTIC TANK INTO THE SYSTEM, PREMATURE CLOGGING OF THE PIPING, STONE OR NATIVE SOIL BENEATH THE SYSTEM IS LIKELY TO OCCUR. ONLY HUMAN WASTES SHOULD ENTER THE SEWAGE SYSTEM. WATER USE SHOULD BE CONSERVATIVE AND CLEANING AGENTS CANNOT ENTER THE SYSTEM, AS THEY KILL BACTERIA.

2. THE STATE FLOW FIGURES OF 140 GAL/DAY/BEDROOM ARE BASED ON SHORT TERM PEAK USE PERIODS (I.E., DAILY EVENTS). ACTUAL FLOWS SHOULD AVERAGE 75-100 GALLONS PER DAY, PER BEDROOMS.

3. ONCE PER YEAR, THE DEPTH OF SCUM AND SLUDGE IN THE SEPTIC TANK SHOULD BE MEASURED AND THE TANK SHALL BE PUMPED IF:

A. THE SLUDGE LEVEL IS WITHIN 12 INCHES OF THE BOTTOM OF THE OUTLET.

B. THE SCUM LAYER IS WITHIN 3 INCHES OF THE TOP OF THE OUTLET.

C. IF A OR B IS ANTICIPATED TO OCCUR PRIOR TO THE NEXT INSPECTION.

D. IN ANY CASE, THE TANK SHALL BE PUMPED AT A MAXIMUM 5 YEAR INTERVAL.

4. ONCE A YEAR, THE DISTRIBUTION BOX AND/OR PUMP STATION SHOULD BE INSPECTED AND ANY SETTLED SOLIDS REMOVED.

5. THE EFFLUENT FILTER SHOULD BE INSPECTED AND CLEANED ANNUALLY.

6. ABOVE ITEMS 1-5 ARE INTENDED TO PROLONG THE LIFE OF THE SYSTEM, NOT GUARANTEE IT.

SEWAGE DESIGN INFORMATION

1. THE SEWAGE DISPOSAL SYSTEM SHALL BE CONSTRUCTED IN ACCORDANCE WITH APPLICABLE TOWN REGULATIONS AND THE VERMONT ENVIRONMENTAL PROTECTION RULES.

2. THE FOLLOWING MINIMUM ISOLATION DISTANCES SHALL BE MAINTAINED FROM THE DISPOSAL AREA TO:

PROPERTY LINE	25 FEET
BUILDING (WITH FOOTING DRAIN) UPSLOPE OR SIDESLOPE	35 FEET
BUILDING (WITH FOOTING DRAIN) DOWNSLOPE	75 FEET
DRIVEWAYS & PARKING LOTS	10 FEET
TREES	10 FEET

3. BASIS OF DESIGN:

	LOT 1	LOT 3 REPLACEMENT
NO. OF BEDROOMS	4	3
DESIGN FLOW	490	420
PERCOLATION RATE	< 60 MIN/INCH	< 60 MIN/INCH
LOADING RATE, Q (TRENCHES)	1.0 GAL/SF/DAY (6" STONE)	1.0 GAL/SF/DAY (6" STONE)

4. SEPTIC TANK

A. A 1,000 GALLON PRECAST CONCRETE SEPTIC TANK, CAMP PRECAST OR APPROVED EQUAL SHALL BE USED, WITH THREE ACCESS COVERS; 4,000 PSI CONCRETE; WATERPROOF JOINTS AND SET ON THOROUGHLY COMPACTED SUBBASE. THE OUTLET BAFFLE SHALL HAVE AN EFFLUENT FILTER & A TWO (2) FOOT DIAMETER RISER TO GRADE WITH STEEL COVER.

B. THE USE OF GARBAGE DISPOSALS IS NOT RECOMMENDED.

5. MISC.:

A. IF A WATER TREATMENT SYSTEM IS GOING TO BE USED, THE BACKWASH WATER MAY NOT BE DISCHARGED INTO THE DISPOSAL SYSTEM.

STATE OF VERMONT MOUND SAND SPECIFICATIONS

Fill Material: The fill material from the natural soil plowed surface to the top of the trench or bed shall be sand texture with one of the following sieve analyses:

1.

Sieve Number	Opening (mm)	Percent Passing, by Weight
10	2.000	85 - 100
40	0.420	25 - 75
60	0.240	0 - 30
100	0.149	0 - 10
200	0.074	0 - 5

2.

Sieve Number	Opening (mm)	Percent Passing, by Weight
4	4.750	95 - 100
8	2.380	80 - 100
16	1.190	50 - 85
30	0.590	25 - 60
50	0.297	10 - 30
100	0.149	2 - 10

3.

Sieve Number	Opening (mm)	Percent Passing, by Weight
10	2.000	85 - 100
40	0.420	30 - 50
200	0.074	0 - 10

The material must meet specifications 1, 2, or 3. Interpolation of analyses is not permitted. Fill material 2 is ASTM Specification C-33 and is intended for manufactured material.

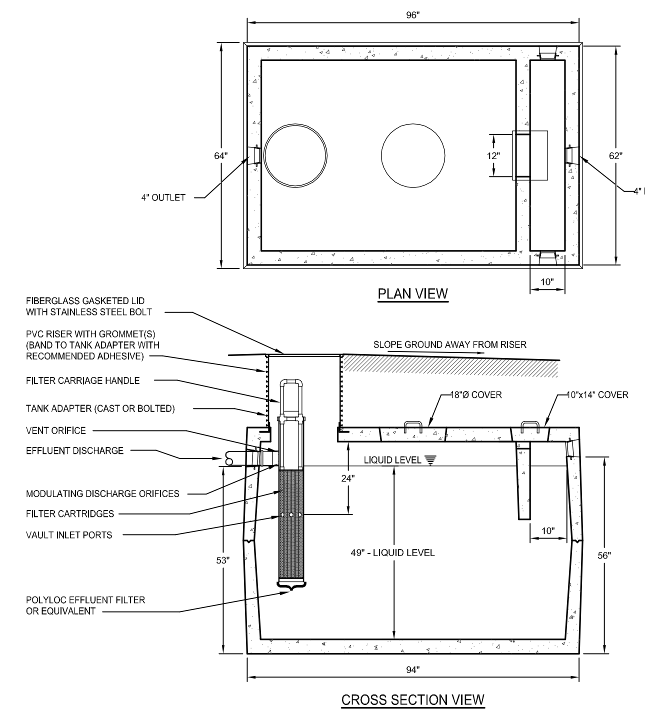

1,000 GALLON PRECAST CONCRETE SEPTIC TANK

NOT TO SCALE

1,000 GALLON SEPTIC TANK NOTES:

1. INLET, OUTLET, SEAM, AND CASTING HOLES TO BE SEALED WITH HYDRAULIC CEMENT AND/OR BUTYLENE GASKET.
2. TANK TO BE SET LEVEL.
3. DIMENSIONS MAY VARY AMONG DIFFERENT MANUFACTURERS.

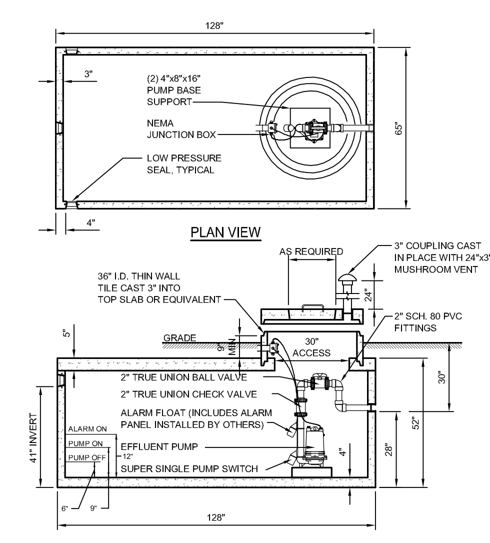

DESIGN NOTES:

1. 4000 PSI CONCRETE, 28 DAY STRENGTH.
2. LOW PRESSURE SEALS DESIGNED TO ACCEPT 4" C.I. OR PVC PIPE.
3. REQUIRES EFFLUENT PUMP CAPABLE OF PUMPING A MINIMUM OF 17.6 GPM (LOT 1) VERSUS 35.04' TDH (LOT 1). AND A SUPER SINGLE PUMP SWITCH WITH A 4.1" SWING SETTING (LOT 1) (+/- 70 GALLONS) SET 6" ABOVE THE BASE OF THE PUMP WITH HIGH LEVEL ALARM SET 6" ABOVE THE PUMP ON SETTING.
4. IT SHOULD BE NOTED THAT ANY DEVIATION IN THE LOCATION OR ELEVATION OF THE SEPTIC TANK, PUMP STATION, OR THE DISPOSAL SYSTEM FROM THE DESIGNED LOCATION MAY REQUIRE A DIFFERENT SIZE PUMP.

1,000 GALLON PRECAST CONCRETE PUMP STATION

NOT TO SCALE

ITEM	LEACHFIELD	SEPTIC TANK	SEWER
DRILLED WELL	(b)	50	50
GRAVEL PACK WELL, SHALLOW WELL OR SPRING	(b)	75	75
LAKES, PONDS AND IMPOUNDMENTS	50	25	25
RIVER, STREAM	50	25	10
DRAINAGE SWALES, ROADWAY DITCHES	25	--	--
MAIN OR MUNICIPAL WATER LINES	50	50	(d)
SEWER SERVICE LINES	25	25	(d)
ROADWAYS, DRIVEWAYS, PARKING LOTS	10	5	(c)
TOP OF EMBANKMENT, OR SLOPE > 30%	25	10	--
PROPERTY LINE	25[1]	10	10
TREES	10	10	10
OTHER DISPOSAL FIELD OR REPLACEMENT AREA	10[2]	--	--
FOUNDATION, FOOTING DRAINS, CURTAIN DRAINS	35[3]	10	--
PUBLIC COMMUNITY WATER SUPPLY (e)	(f)	(f)	(f)
SUCTION WATER LINE	100	50	50

THESE DISTANCES MAY BE REDUCED WHEN EVIDENT THAT THE DISTANCE IN UNNECESSARY TO PROTECT AN ITEM OR INCREASED IF NECESSARY TO PROVIDE ADEQUATE PROTECTION.

(a) ISOLATION DISTANCES APPLY REGARDLESS OF PROPERTY LINE AND OWNERSHIP.
(b) SEPARATION BETWEEN POTABLE WATER SUPPLIES AND LEACHFIELDS SHALL BE DETERMINED BY METHODS IN THE VERMONT WATER AND SUPPLY RULE, APPENDIX 21-A, PART 11, 11.4.
(c) SEWERS UNDER ROADS, DRIVEWAYS OR PARKING LOTS MAY REQUIRE PROTECTIVE CONDUITS OR SLEEVES.
(d) SEPARATION OF PRESSURE WATER LINES CONSIDERED AS "SERVICE CONNECTIONS" AND SEWER LINES SHALL ADHERE TO THE VERMONT PLUMBING RULES. SEPARATION OF PRESSURE WATER LINES (CONSIDERED TO BE PART OF A PUBLIC WATER SYSTEM AS DEFINED BY THE VERMONT WATER SUPPLY RULE) AND SEWER LINES SHALL ADHERE TO THE REQUIREMENTS OF THE VERMONT WATER SUPPLY RULE.
(e) THIS REFERS TO PUBLIC COMMUNITY WATER SYSTEMS, AS DEFINED IN THE VERMONT WATER SUPPLY RULE.
(f) CONTACT DEPARTMENT OF ENVIRONMENTAL CONSERVATION'S WATER SUPPLY DIVISION, 103 SOUTH MAIN STREET, WATERBURY, VERMONT FOR ISOLATION DISTANCES RELATIVE TO PUBLIC COMMUNITY WATER SUPPLY.

WASTEWATER SYSTEM ISOLATION DISTANCES

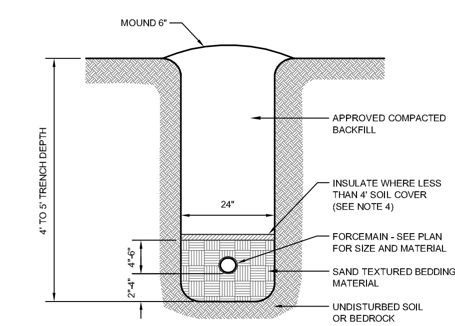

FORCEMAIN TRENCH NOTES:

1. BACKFILL AND BEDDING SHALL BE PROPERLY COMPACTED.
2. BEDDING MATERIAL SHALL NORMALLY CONSIST OF WELL-GRADED SANDS AND GRAVELS WITH A MAXIMUM SIZE OF 3/4".
3. BACKFILL SHALL NOT CONTAIN:
   - -ANY STONES MORE THAN 12" (1 1/2" MAXIMUM DIAMETER WITHIN 2' OF THE OUTSIDE OF THE PIPE) IN THE LARGEST DIMENSION.
   - -BE GREATER THAN 50 POUNDS.
   - -CONTAIN ANY FROZEN, WET OR ORGANIC MATERIAL.
4. USE RIGID INSULATION AT THE RATE OF 1" FOR EVERY FOOT LESS THAN 4'.
5. FORCEMAIN MUST BE TESTED FOR LEAKAGE.
6. AT ANY CROSSING UNDER A ROAD OR DRIVE, FORCEMAIN IS TO BE ENCASED IN A 4" PVC SLEEVE, SAID SLEEVE IS TO EXTEND 8' IN EITHER DIRECTION FROM EDGE OF TRAVELED WAY.
7. THE SIDES OF THE TRENCHES 4' OR MORE IN DEPTH ENTERED BY PERSONNEL SHALL BE SHEETED OR SLOPED TO THE ANGLE OF REPOSE AS DEFINED BY O.S.H.A. STANDARDS.

FORCEMAIN TRENCH DETAIL

NOT TO SCALE

NOT TO SCALE

THE CONTRACTOR SHALL NOTIFY "DIGSAFE" AT 1-888-DIG-SAFE PRIOR TO ANY EXCAVATION.

No.	Revision	Date

It is the user's responsibility to ensure this copy contains the latest revisions

"I hereby certify that in the exercise of my reasonable professional judgment the design-related information submitted with this application is true and correct, and that the design included in this application for a permit complies with the Vermont Wastewater System and Potable Water Supply Rules and the Vermont Water Supply Rules."

Stephen Revell, CPG — Date
Licensed Class B Designer #178

AMERICAN INSTITUTE OF PROFESSIONAL GEOLOGISTS — CERTIFICATE NUMBER 6259 — AIPG — STEPHEN REVELL — CERTIFIED PROFESSIONAL GEOLOGIST

LINCOLN APPLIED GEOLOGY, INC.
Environmental Consultants
163 Revell Drive, Lincoln, Vermont 05443
(802) 453-4384, (802) 453-5399 (fax)
Web: www.lagvt.com, E-Mail: lagvt@lagvt.com

Melrose Huff Property

88 Roscoe Road
Charlotte, Vermont

Proposed Wastewater System Details and Specifications

LAG PROJECT #	00705
DATE	12-03-2007
SURVEYORS	JS/SR
DRAWN	LAG
PLAN SHEET #	4 of 4

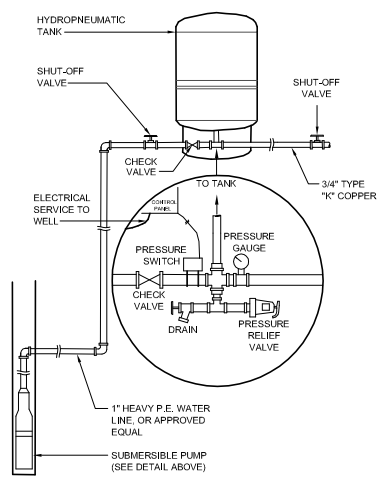

TYPICAL INDIVIDUAL WATER SYSTEM

NOT TO SCALE

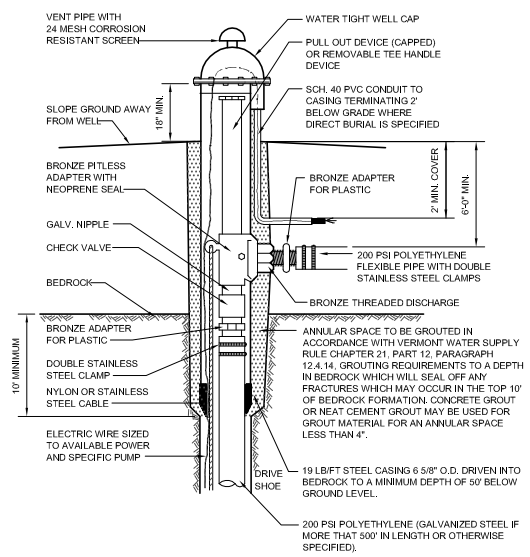

TYPICAL INDIVIDUAL DRILLED WELL

NOT TO SCALE

INDIVIDUAL DRILLED WELL NOTE:

1. THE SUBMERSIBLE PUMP MODEL AND DEPTH OF SETTING TO BE SPECIFIED BY THE ENGINEER AFTER THE WELL IS DRILLED AND YIELD TESTED (PIPE AND ADAPTOR SIZE TO SUIT ALSO).

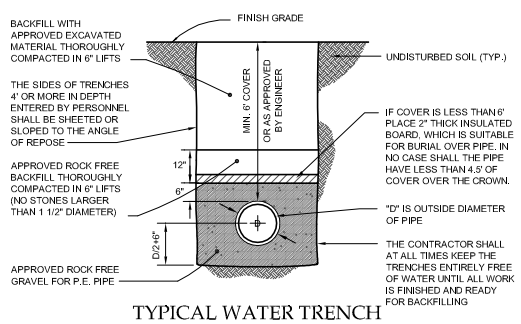

TYPICAL WATER TRENCH

NOT TO SCALE

POTENTIAL SOURCE OF CONTAMINATION AND OTHER SITING LIMITATIONS	SEPARATION DISTANCE
Roadway, Parking Lot (outer edge of shoulder)	25 Feet
Driveway (Fewer than 3 residences)	15 Feet
Sewage System Disposal Fields	(See a.)
Subsurface Wastewater Piping and Related Tanks	50 Feet
Property Line	10 Feet (See b.)
Limit of Herbicide Application on utility R.O.W.	100 Feet (See c.)
Surface Water	10 Feet (See d.)
Buildings	10 Feet
Concentrated Livestock Holding Areas and Manure Storage Systems	200 Feet
Hazardous or Solid Waste Disposal Site	(See f.)
Non-sewage Wastewater Disposal Fields	(See f.)

DRILLED WELL ISOLATION DISTANCES

a. See Table a11-2.
b. Increased to 50' when adjacent to agricultural cropland.
c. Applies to rights-of-way (ROW) where herbicides have been applied in the past 12 months or may be applied in the future. This distance may be increased to 200' depending on the active ingredient in the herbicide according to Vermont Regulations for Control of Pesticides.
d. For Public water sources, see appendix A, Part 3, Subpart 3.4.
e. Water sources shall not be located in a flood way.
f. If a water source is potentially downgradient of a source of contamination, then the Secretary shall apply criteria in Appendix A Subpart 11.4.2.2.

INDIVIDUAL DRILLED WELL DESIGN DATA

1. THE DRILLED WELL(S) CONSTRUCTION, LOCATION, DISINFECTION, AND TESTING SHALL BE IN ACCORDANCE WITH THE STATE OF VERMONT - WATER SUPPLY RULES.

2. THE BASIS OF DESIGN FOR EACH DRILLED WELL IS:

A. AVERAGE DAY DEMAND: 490 GPD (LOT 1).
B. MAXIMUM DAILY DEMAND: (490 GPD)/720 MIN/DAY = 0.68 GPM (LOT 1).
C. OPERATING PRESSURE RANGE: 40-60 PSI AT PRESSURE SWITCH
D. INSTANTANEOUS PEAK DEMAND = 5 GPM.

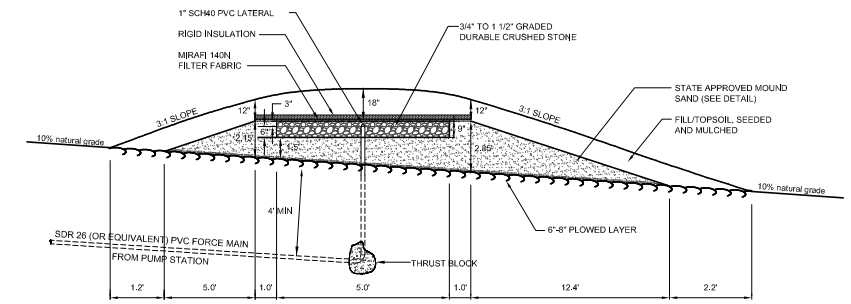

LOT 3 - REPLACEMENT MOUND TYPE WASTEWATER DISPOSAL SYSTEM DETAIL - SECTION VIEW

NOT TO SCALE

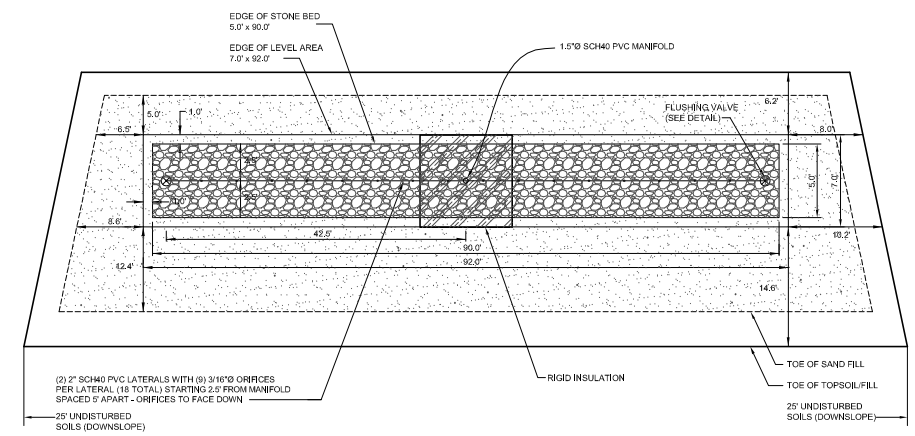

LOT 3 - REPLACEMENT MOUND TYPE WASTEWATER DISPOSAL SYSTEM DETAIL - PLAN VIEW

NOT TO SCALE

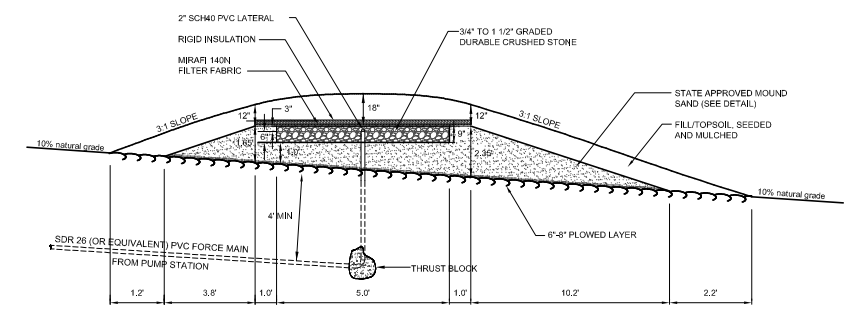

LOT 1 - PRIMARY MOUND TYPE WASTEWATER DISPOSAL SYSTEM DETAIL - SECTION VIEW

NOT TO SCALE

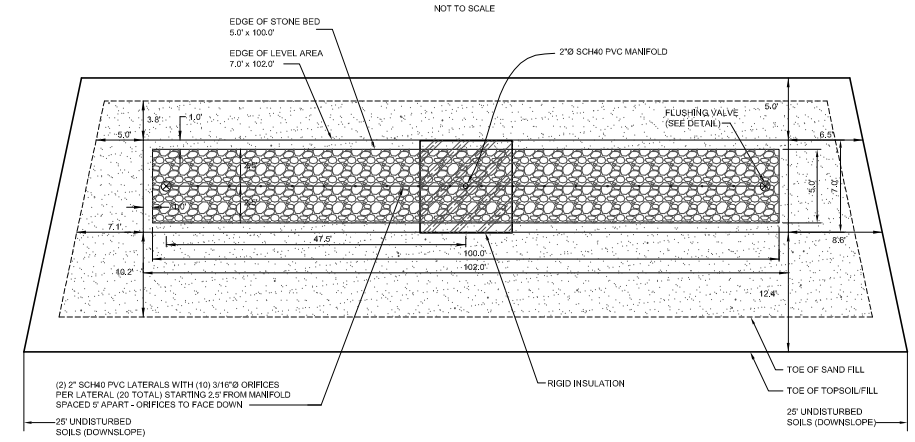

LOT 1 - PRIMARY MOUND TYPE WASTEWATER DISPOSAL SYSTEM DETAIL - PLAN VIEW

NOT TO SCALE

NOT TO SCALE

THE CONTRACTOR SHALL NOTIFY "DIGSAFE" AT 1-888-DIG-SAFE PRIOR TO ANY EXCAVATION.

No.	Revision	Date

It is the user's responsibility to ensure this copy contains the latest revisions.

"I hereby certify that in the exercise of my reasonable professional judgment the design-related information submitted with this application is true and correct, and that the design included in this application for a permit complies with the Vermont Wastewater System and Potable Water Supply Rules and the Vermont Water Supply Rules."

Stephen Revell, CPG — Date
Licensed Class B Designer #178

AMERICAN INSTITUTE OF PROFESSIONAL GEOLOGISTS — CERTIFIED PROFESSIONAL GEOLOGIST — 6259 — AIPG — STEPHEN REVELL

LINCOLN APPLIED GEOLOGY, INC.
Environmental Consultants
113 Revell Drive (802) 485-8780 Tel: 1 www.lagi.com
Lincoln, Vermont 05443 (802) 453-6300 fax: Email: lagi@lagi.com

Melrose Huff Property

88 Roscoe Road
Charlotte, Vermont

Proposed Water System and Wastewater System Details

LAG PROJECT #	00705
DATE	12-03-2007
SURVEYORS	JS/SR
DRAWN	LAG
PLAN SHEET #	3 of 4

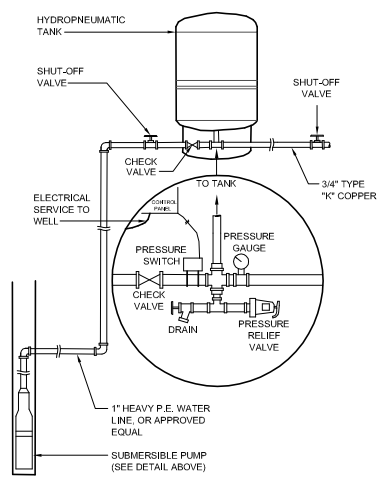

TYPICAL INDIVIDUAL WATER SYSTEM

NOT TO SCALE

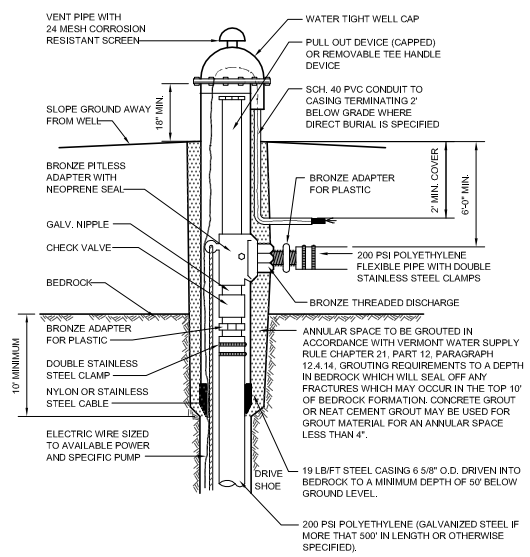

TYPICAL INDIVIDUAL DRILLED WELL

NOT TO SCALE

INDIVIDUAL DRILLED WELL NOTE:

1. THE SUBMERSIBLE PUMP MODEL AND DEPTH OF SETTING TO BE SPECIFIED BY THE ENGINEER AFTER THE WELL IS DRILLED AND YIELD TESTED (PIPE AND ADAPTOR SIZE TO SUIT ALSO).

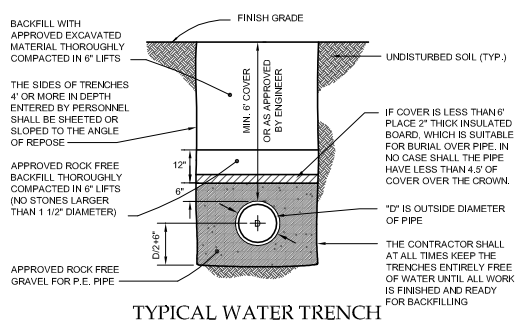

TYPICAL WATER TRENCH

NOT TO SCALE

POTENTIAL SOURCE OF CONTAMINATION AND OTHER SITING LIMITATIONS	SEPARATION DISTANCE
Roadway, Parking Lot (outer edge of shoulder)	25 Feet
Driveway (Fewer than 3 residences)	15 Feet
Sewage System Disposal Fields	(See a.)
Subsurface Wastewater Piping and Related Tanks	50 Feet
Property Line	10 Feet (See b.)
Limit of Herbicide Application on utility R.O.W.	100 Feet (See c.)
Surface Water	10 Feet (See d.)
Buildings	10 Feet
Concentrated Livestock Holding Areas and Manure Storage Systems	200 Feet
Hazardous or Solid Waste Disposal Site	(See f.)
Non-sewage Wastewater Disposal Fields	(See f.)

DRILLED WELL ISOLATION DISTANCES

a. See Table a11-2.
b. Increased to 50' when adjacent to agricultural cropland.
c. Applies to rights-of-way (ROW) where herbicides have been applied in the past 12 months or may be applied in the future. This distance may be increased to 200' depending on the active ingredient in the herbicide according to Vermont Regulations for Control of Pesticides.
d. For Public water sources, see appendix A, Part 3, Subpart 3.4.
e. Water sources shall not be located in a flood way.
f. If a water source is potentially downgradient of a source of contamination, then the Secretary shall apply criteria in Appendix A Subpart 11.4.2.2.

INDIVIDUAL DRILLED WELL DESIGN DATA

1. THE DRILLED WELL(S) CONSTRUCTION, LOCATION, DISINFECTION, AND TESTING SHALL BE IN ACCORDANCE WITH THE STATE OF VERMONT - WATER SUPPLY RULES.

2. THE BASIS OF DESIGN FOR EACH DRILLED WELL IS:

A. AVERAGE DAY DEMAND: 490 GPD (LOT 1).
B. MAXIMUM DAILY DEMAND: (490 GPD)/720 MIN/DAY = 0.68 GPM (LOT 1).
C. OPERATING PRESSURE RANGE: 40-60 PSI AT PRESSURE SWITCH
D. INSTANTANEOUS PEAK DEMAND = 5 GPM.

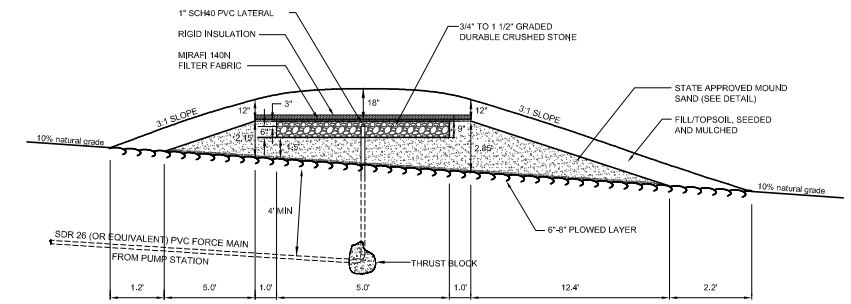

LOT 3 - REPLACEMENT MOUND TYPE WASTEWATER DISPOSAL SYSTEM DETAIL - SECTION VIEW

NOT TO SCALE

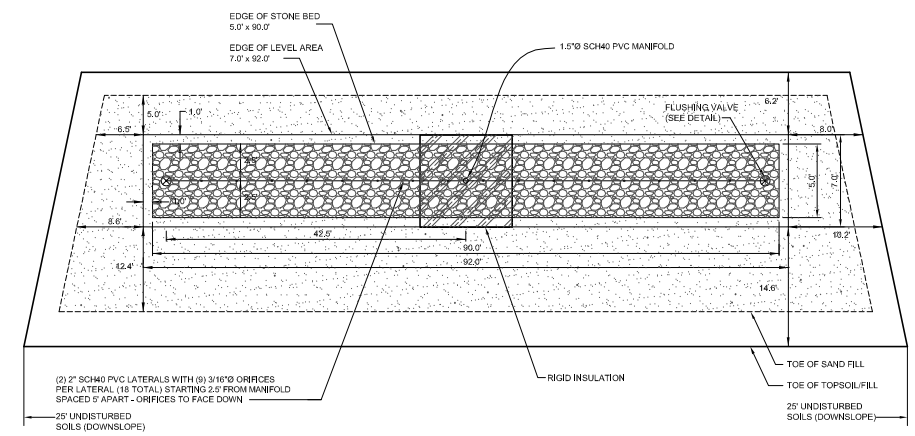

LOT 3 - REPLACEMENT MOUND TYPE WASTEWATER DISPOSAL SYSTEM DETAIL - PLAN VIEW

NOT TO SCALE

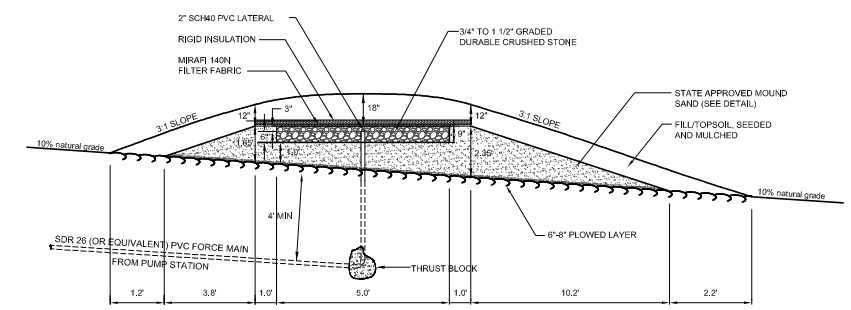

LOT 1 - PRIMARY MOUND TYPE WASTEWATER DISPOSAL SYSTEM DETAIL - SECTION VIEW

NOT TO SCALE

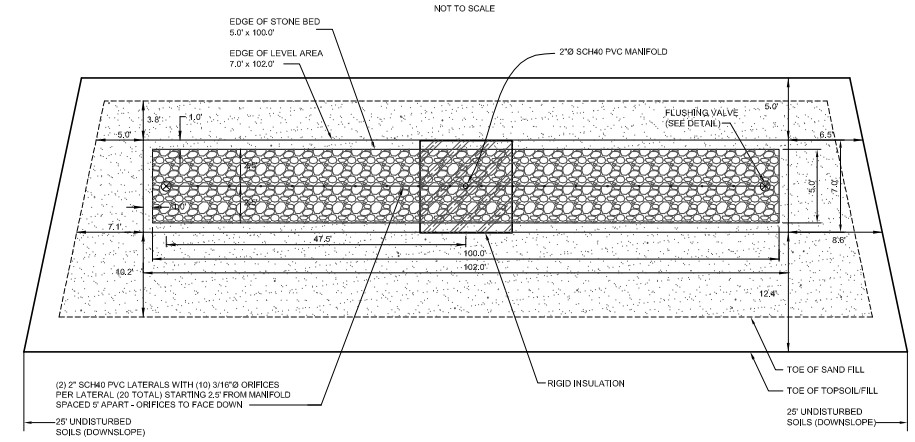

LOT 1 - PRIMARY MOUND TYPE WASTEWATER DISPOSAL SYSTEM DETAIL - PLAN VIEW

NOT TO SCALE

NOT TO SCALE

THE CONTRACTOR SHALL NOTIFY "DIGSAFE" AT 1-888-DIG-SAFE PRIOR TO ANY EXCAVATION.

No.	Revision	Date

It is the user's responsibility to ensure this copy contains the latest revisions.

"I hereby certify that in the exercise of my reasonable professional judgment the design-related information submitted with this application is true and correct, and that the design included in this application for a permit complies with the Vermont Wastewater System and Potable Water Supply Rules and the Vermont Water Supply Rules."

Stephen Revell, CPG — Date
Licensed Class B Designer #178

AMERICAN INSTITUTE OF PROFESSIONAL GEOLOGISTS — CERTIFIED PROFESSIONAL GEOLOGIST — 6259 — AIPG — STEPHEN REVELL

LINCOLN APPLIED GEOLOGY, INC.
Environmental Consultants
113 Revell Drive (802) 485-8780 Tel: 1 www.lagi.com
Lincoln, Vermont 05443 (802) 453-6300 fax: Email: lagi@lagi.com

Melrose Huff Property

88 Roscoe Road
Charlotte, Vermont

Proposed Water System and Wastewater System Details

LAG PROJECT #	00705
DATE	12-03-2007
SURVEYORS	JS/SR
DRAWN	LAG
PLAN SHEET #	3 of 4