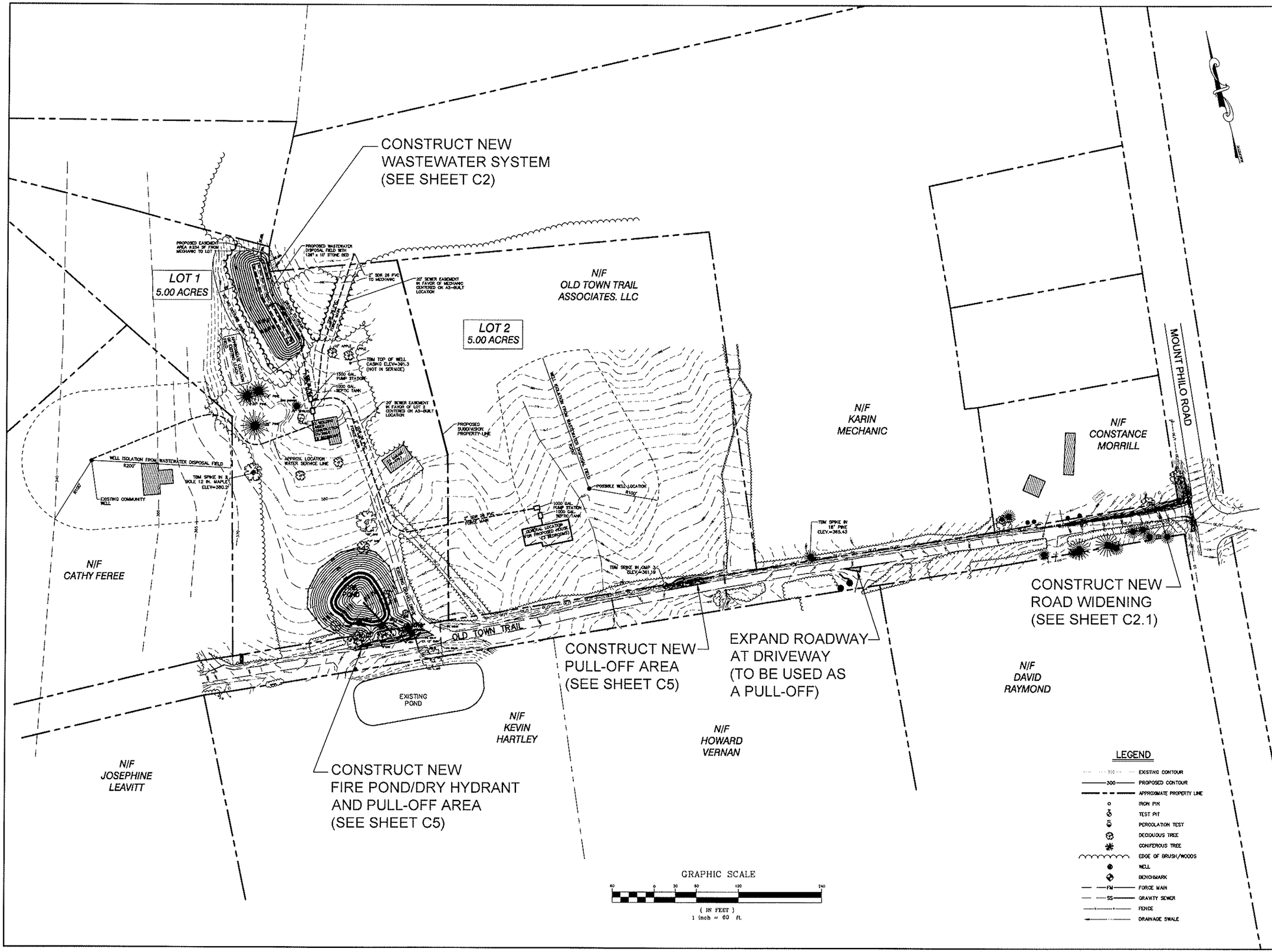

SITE ENGINEER:

CIVIL ENGINEERING ASSOCIATES, INC.
10 MANSFIELD VIEW LANE, SOUTH BURLINGTON, VT 05403
802-864-2323 FAX: 802-864-2271 web: www.cea-vt.com

COPYRIGHT © 2009 - ALL RIGHTS RESERVED

DRAWN
ACL
CHECKED
DSM
APPROVED
DSM

OWNER:

OLD TOWN TRAIL
ASSOCIATES, LLC

86 LAKE STREET
BURLINGTON, VERMONT

PROJECT:

OLD TOWN TRAIL
ASSOCIATES, LLC
2 LOT SUBDIVISION

OLD TOWN TRAIL
CHARLOTTE
VERMONT

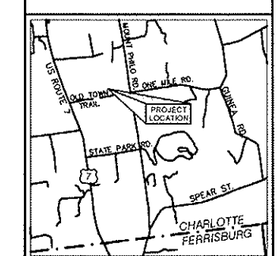

LOCATION MAP
1" = 4000'

DATE	CHECKED	REVISION

OVERALL
SITE PLAN

DATE
APRIL, 2009

SCALE
1" = 60'

PROJ. NO.
07239

DRAWING NUMBER
C1

PROPOSED EASEMENT AREA ±254 SF FROM MECHANIC TO LOT

PROPOSED WASTEWATER DISPOSAL FIELD WITH 126' x 10' STONE BED

2" SDR 26 PVC TO MECHANIC

20' SEWER EASEMENT IN FAVOR OF MECHANIC CENTERED ON AS-BUILT LOCATION

25' NO DISTURB AREA

APPROXIMATE LOCATION OF EXISTING LEACH FIELD

GRADE TO DRAIN

2" SDR 26 PVC FORCE MAIN

10" APPLE

6" APPLE

TBM TOP OF WELL CASING ELEV=391.3 (NOT IN SERVICE)

1500 GAL. PUMP STATION

1000 GAL. SEPTIC TANK

2" SDR 26 PVC FORCE MAIN

18" PINE

30" PINE

YARD HYDRANT

SPRUCE

LILAC

36" PINE

EX. BUILDING UNDER CONSTRUCTION FF=396.0 (2 BEDROOMS)

20' SEWER EASEMENT IN FAVOR OF LOT 2 CENTERED ON AS-BUILT LOCATION

PROPOSED SUBDIVISION PROPERTY LINE

2" SDR 26 PVC FORCE MAIN

APPROX. LOCATION WATER SERVICE LINE

EX. GARAGE FF=379.1

WATER DISPOSAL FIELD

TBM SPIKE IN 2 BOLE 12 IN. MAPLE ELEV=380.2'

GRAPHIC SCALE

(IN FEET)
1 inch = 20 ft.

36" OAK

12" OAK

WELL ISOLATION FROM WASTEWATER DISPOSAL FIELD

R200'

1000 GAL. PUMP STATION

1000 GAL. SEPTIC TANK

2" SDR 26 PVC FORCE MAIN

GENERAL LOCATION FOR PROPOSED HOUSE (3 BEDROOMS)

LEGEND

- EXISTING CONTOUR
- PROPOSED CONTOUR
- APPROXIMATE PROPERTY LINE
- IRON PIN
- PERCOLATION TEST
- DECIDUOUS TREE
- CONIFEROUS TREE
- EDGE OF BRUSH/WOODS
- WELL
- BENCHMARK
- FORCE MAIN
- GRAVITY SEWER
- FENCE
- DRAINAGE SWALE
- TEST PIT
- DEPTH TO SHGWT
- MAX. LLR WITH 6" UNSAT.

TEST PIT 11-19-07

TP #1A
0-8" LOOSE LIGHT BROWN FINE SANDY LOAM
8"-12" BROWN FINE SANDY LOAM
12"-21" LOOSE BROWN FINE SAND
21"-48" COMPACT TAN FINE SANDY LOAM
15" MOTTLING NO WATER
ROOTS TO 24" NO LEDGE

TP #2A
0-7" LOOSE DARK BROWN FINE SANDY LOAM
7"-15" MED. COMPACT BROWN LOAM
15"-49" COMPACT BROWN SILT LOAM
15" MOTTLING NO WATER
ROOTS TO 25" NO LEDGE

TP #3A
0-8" LOOSE LIGHT BROWN FINE SANDY LOAM
8"-15" LOOSE BROWN FINE SANDY LOAM
15"-36" MED COMPACT BROWN LOAM
36"-48" COMPACT TAN LOAM
15" MOTTLING NO WATER
ROOTS TO 27" NO LEDGE

TP #4A
0-5" LOOSE DARK BROWN FINE SANDY LOAM
5"-15" LOOSE LIGHT BROWN FINE SANDY LOAM
15"-22" MED. COMPACT GREY BROWN FINE SAND
22"-40" COMPACT GRAY BROWN LOAM
40"-49" COMPACT TAN FINE SANDY LOAM
17" MOTTLING NO WATER
ROOTS TO 32" NO LEDGE

TP #5A
0-6" LOOSE DARK BROWN FINE SANDY LOAM
5"-14" LOOSE BROWN FINE SANDY LOAM
16"-20" MED. COMPACTBROWN FINE SANDY LOAM
20"-29" COMPACT DARK BROWN LOAM
29"-50" COMPACT TAN FINE SANDY LOAM
14" MOTTLING NO WATER
ROOTS TO 34" NO LEDGE

TP #6A
0-7" LOOSE DARK BROWN FINE SANDY LOAM
7"-18" LIGHT BROWN FINE SANDY LOAM
18"-27" MED COMPACT BROWN FINE SAND LOAM
27"-51" COMPACT LIGHT TAN FINE SANDY LOAM
17" MOTTLING NO WATER
ROOTS TO 32" NO LEDGE

TP #7A
0-7" DARK BROWN LOOSE FINE SANDY LOAM
6"-24" MED. COMPACT OLIVE BROWN SILT LOAM
MOTTLING 6" NO WATER
ROOTS TO 8" NO LEDGE

TP #8A
0-7" LOOSE DARK BROWN FINE SANDY LOAM
7"-15" LOOSE BROWN FINE SANDY LOAM
15"-20" MED. COMPACT BROWN LOAM
20"-25" MED. COMPACT OLIVE BROWN SILT LOAM
MOTTLING 15" NO WATER

TP #9A
0-7" LOOSE BROWN FINE SANDY LOAM
7"-42" MED. COMPACT OLIVE BROWN SILT LOAM
42"-50" COMPACT TAN FINE SANDY LOAM
MOTTLING 7" NO WATER
ROOTS TO 12" NO LEDGE

TP #10A
0-8" LOOSE BROWN FINE SANDY LOAM
6"-12" LOOSE BROWN GRAY FINE SANDY LOAM
12"-26" COMPACT OLIVE BROWN SILT LOAM
MOTTLING 11" NO WATER
ROOTS TO 16" NO LEDGE

PERC. TEST 3-11-08

PERC TEST #1 = 58 MIN./INCH
PERC TEST #2 = 28 MIN./INCH

SITE ENGINEER:

CIVIL ENGINEERING ASSOCIATES, INC.
10 MANSFIELD VIEW LANE, SOUTH BURLINGTON, VT 05403
802-864-2323 FAX: 802-864-2271 web: www.cea-vt.com

COPYRIGHT © 2009 - ALL RIGHTS RESERVED

DRAWN: ACL
CHECKED: DSM
APPROVED: DSM

OWNER:

OLD TOWN TRAIL ASSOCIATES, LLC

86 LAKE STREET
BURLINGTON, VERMONT

PROJECT:

OLD TOWN TRAIL ASSOCIATES, LLC
2 LOT SUBDIVISION

OLD TOWN TRAIL
CHARLOTTE
VERMONT

DATE	CHECKED	REVISION

WASTEWATER SYSTEM SITE PLAN

DATE: APRIL, 2009
SCALE: 1" = 20'
PROJ. NO. 07239

DRAWING NUMBER: C2

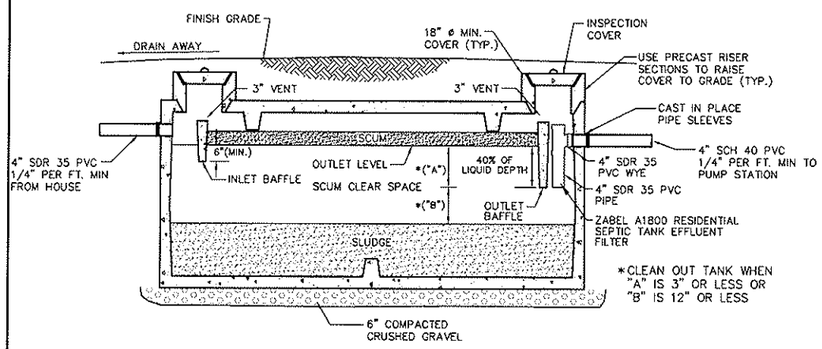

1000 GALLON SEPTIC TANK

N.T.S.

Septic Tank Notes

1. Septic tank shall be a precast concrete tank, unless otherwise approved.
2. Maintenance
   - At least once a year, the depth of sludge and scum in the septic tank should be measured. The tank should be pumped if:
     - The sludge is closer than twelve inches to the outlet baffle or;
     - The scum layer is closer than three inches to the outlet baffle.
   - Under no circumstances should anyone enter a septic tank.
3. Recommendations
   - The use of garbage grinders is discouraged as sludge accumulation in the septic tank can be increased by up to 40 %. If used, the septic tank will require more frequent pumping.
   - The septic system is designed to handle human waste and toilet paper, plus water from plumbing fixtures such as toilets, baths and sinks. Moderate use of household cleaners, detergents and bleach should not damage your system; however, indiscriminate use may cause problems. Non-degradable paper products and any other non-biodegradable substances should not be put in your wastewater system.
   - Minimize the amount of water used in the household. Excessive water could flush solids from the septic tank to the disposal field which leads to clogging or plugging of the piping. When dishwashers and washers are used, make sure loads are full and stagger their use to reduce peak flows, i.e. stagger loads of laundry over several days instead of one day.
4. Walkways, patios and decks or other permanent structures should not be constructed over the septic tank.
5. There should be no need to use commercial "starter", "bacterial feeds", or "cleaners", etc. Bacteria in a septic tank system occurs naturally.

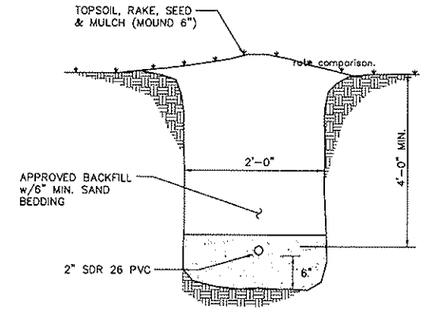

FM TRENCH SECTION

N.T.S.

NOTES:

1. Compaction of backfill and bedding shall be a minimum of 90% (95% under roadway surfaces) of maximum dry density determined in the standard proctor test (ASTM D698).
2. Bedding material shall consist of crushed stone, gravel or sand with a maximum size of 3/4". Submit a sample to the Engineer for approval.
3. In trenches with unstable materials, trench bottom shall first be stabilized by placement of filter fabric then crushed stone (3/4" maximum).
4. Where 4 ft. of cover cannot be maintained the sewer pipe shall be protected against freezing by installation of a minimum of 3 inch thick styrofoam insulating sheets.
5. Approved backfill shall not contain any stones more than 12" in largest dimension (6" in roadways, 2" maximum diameter within 2' of the outside of the pipe), or contain any frozen, wet, or organic material.
6. Use 3 inch styrofoam sheets at all road crossings or areas that are to be plowed during the winter.
7. The sides of trenches 4' or more in depth entered by personnel shall be sheeted or sloped to the angle of repose as defined by O.S.H.A. standards.

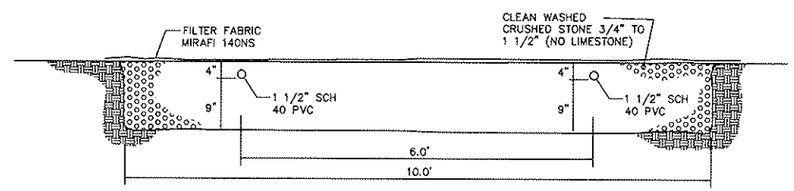

TYPICAL DISPOSAL FIELD TRENCH SECTION

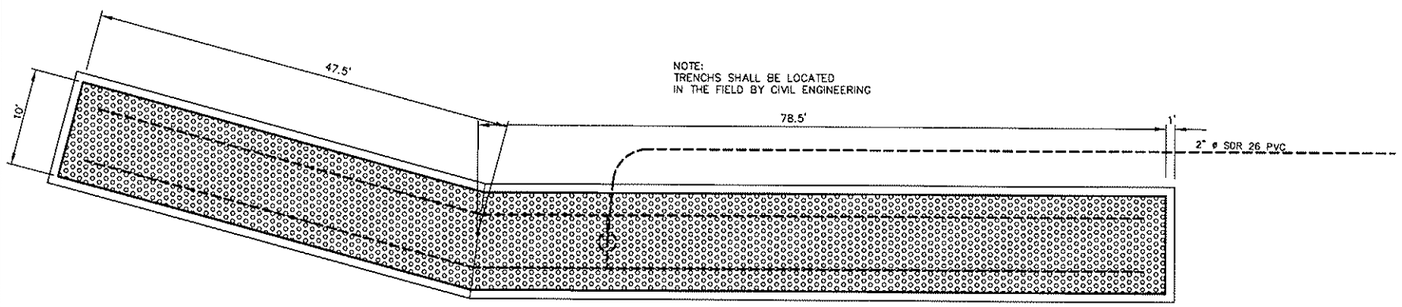

TYPICAL TRENCH PLAN

N.T.S.

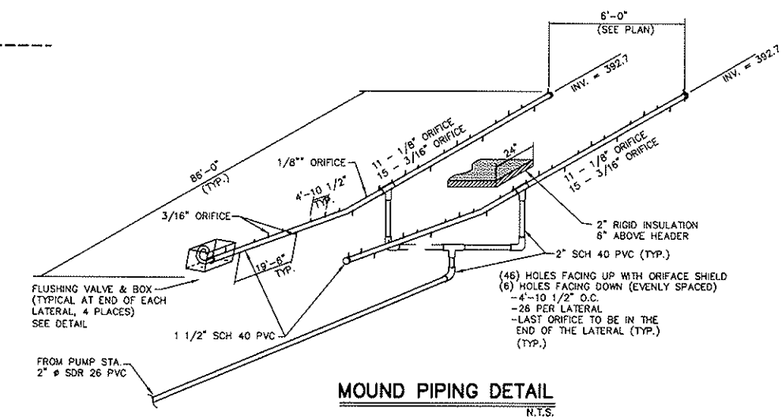

MOUND PIPING DETAIL

N.T.S.

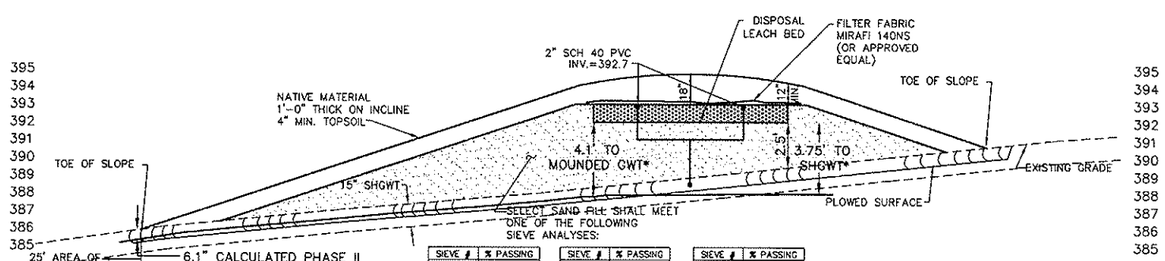

SIEVE #	% PASSING
10	85-100
40	25-75
60	0-30
100	0-10
200	0-5

SIEVE #	% PASSING
8	80-100
16	50-85
30	25-60
50	10-30
100	2-10

SIEVE #	% PASSING
10	85-100
40	30-50
200	0-10

*VALUES PREPRESENT PHASE II DESIGN FLOW OF 1260 GPD (10 GPD/LF)

MOUND CROSS-SECTION

1/4" = 1'-0"

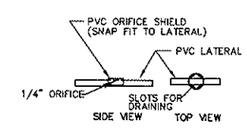

ORIFICE SHIELD DETAIL

NTS

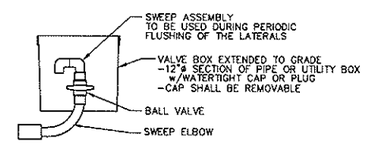

FLUSHING VALVE DETAIL

NTS

SITE ENGINEER:

CIVIL ENGINEERING ASSOCIATES, INC.
10 MANSFIELD VIEW LANE, SOUTH BURLINGTON, VT 05403
802-864-2323 FAX: 802-864-2271 web: www.cea-vt.com

COPYRIGHT © 2009 - ALL RIGHTS RESERVED

DRAWN: ACL
CHECKED: DSM
APPROVED: DSM

OWNER:

OLD TOWN TRAIL ASSOCIATES, LLC

86 LAKE STREET
BURLINGTON, VERMONT

PROJECT:

OLD TOWN TRAIL ASSOCIATES, LLC
2 LOT SUBDIVISION

OLD TOWN TRAIL
CHARLOTTE
VERMONT

DATE	CHECKED	REVISION

WASTEWATER SYSTEM DETAILS

DATE: APRIL, 2009
SCALE: AS SHOWN
PROJ. NO.: 07239
DRAWING NUMBER: C3

Basis of Design
Design Flow: 280+490
2 BR Home x 140 GPD = 280 GPD
3 BR Home x 140 GPD = 420 GPD
Required Trench Area
Bed application 1.0 GPD/SF
Required Area = 700/1.0 = 700 SF
Area Provided = 126 x 10 = 1260 SF
Hydrogeology
Prop. Applic. Rate = 700/126 = 5.56 GPD/LF
Limiting Locations (max. applic. rates assume 6" of unsaturated soil)
TP #6A 12.1 GPD/LF (under application area)
TP #8A 10.1 GPD/LF (south of application area)
TP #3A 14.1 GPD/LF (Under Toe downgradient of application area)
TP #4A 17.1 GPD/LF (Downgradient of Toe)
Actual unsaturated soil at TP #4A
Fine Sandy Loam at slope between 10.1% and 15% =18.7 GPD/LF
5.56 GPD/LF application rate yields 0.3' (4") of saturation.
Resulting unsaturated depth = 17" – 4" = 13" > 6" okay
Distribution
Bed Design – one orifice per 25 SF
Bed Area = 10' x 126' = 1260 SF
Required number of orifices = 1260/25 = 51
Number provided = 52
Spacing – 26 per lateral at 122/25 = 4.88' o.c.

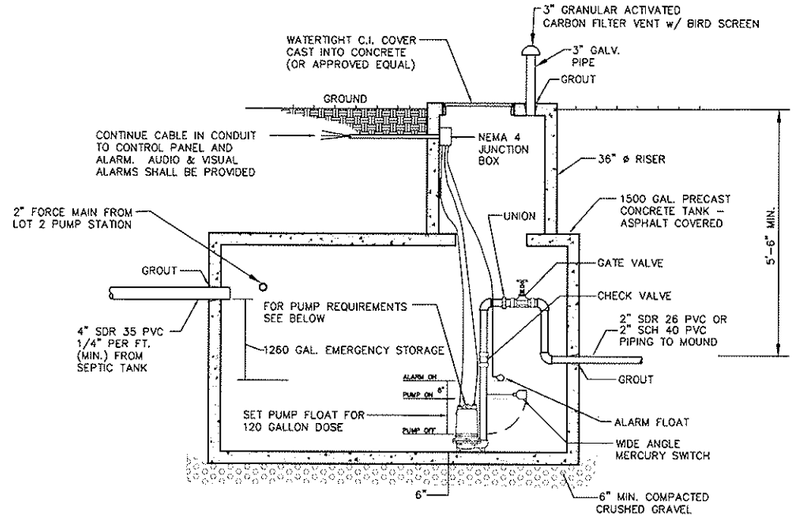

*VERIFY PUMP REQUIREMENTS WITH THE ENGINEER IF FINAL SITE SELECTED IS OTHER THAN SHOWN ON PLAN

1500 GALLON PUMP STATION DETAIL

N.T.S.

MAIN PUMP STATION
HYDROMATIC SHEF 40 EFFLUENT PUMP, 1 PHASE, 230 V

SMALL PUMP STATION (1000 GAL.) FROM LOT 2
HYDROMATIC SPD 50 EFFLUENT PUMP, 1 PHASE, 230 V

Main Wastewater Pump Station Analysis
Phase I Proposal
February 10, 2009

	Design Conditions	
Design flow	700	GPD
Infiltration	0	GPD
25% Multiple Effect	0	
Total Design Flow	700	GPD
Average Daily Flow	0.73	GPM
Peaking Factor	5.00	
Peak Flow	3.65	GPM
Required Storage	700	gallons
Storage Provided	1,250	gallons
Force Main Dia	2.00	inches
Min Cleansing Velocity	2.50	FPS
Min Pumping Rate	34.47	GPM
Chosen Pumping rate	37.00	GPM
Length of FM	10,000	feet
Friction Losses	1.90	feet
High Point of FM	36.00	feet
Elevation of PS	37.00	feet
Elevation Change	1.00	feet
Minor Losses	3.00	feet
Residual	2.00	feet
TDH	7.90	feet
Pump Cycle Storage	100	Gallons
Run Cycle	4.07	Minutes
Min Well Distribution Time	164.51	Minutes
Pump Efficiency	70	%
Pump Size	0.75	Hp

System Curve

GPM	TDH
22	7.2
30	7.8
35	7.9
40	8.3

Main Wastewater Pump Station Analysis
Phase II - Full Build Out
February 10, 2009

	Design Conditions	
Design flow	1,400	GPD
Infiltration	0	GPD
25% Multiple Effect	0	
Total Design Flow	1,400	GPD
Average Daily Flow	1.17	GPM
Peaking Factor	5.00	
Peak Flow	5.83	GPM
Required Storage	1,400	gallons
Storage Provided	1,250	gallons
Force Main Dia	2.00	inches
Min Cleansing Velocity	2.50	FPS
Min Pumping Rate	34.47	GPM
Chosen Pumping rate	37.00	GPM
Length of FM	10,000	feet
Friction Losses	1.90	feet
High Point of FM	36.00	feet
Elevation of PS	37.00	feet
Elevation Change	1.00	feet
Minor Losses	3.00	feet
Residual	2.00	feet
TDH	7.90	feet
Pump Cycle Storage	100	Gallons
Run Cycle	4.07	Minutes
Min Well Distribution Time	81.43	Minutes
Pump Efficiency	70	%
Pump Size	0.75	Hp

System Curve

GPM	TDH
22	7.2
30	7.8
35	7.9
40	8.3

Wastewater Disposal System Design
Phase I Proposal
February 10, 2009

700	Design Flow (GPD)
0.73	Average Daily Flow (GPM)
10.1	Allowable application rate linear foot (GPD/LF)
69	Linear feet of Trench Required (FT)
138	Equivalent linear feet of Trench Proposed (FT)
Dosing Requirements	
1.5	Diameter of Distribution Pipe (inches)
244	Length of Distribution Pipe (FT)
22	Distribution System Volume (Gallons)
5	Required Dose Volume Factor
112	Required Minimum Dose Volume (Gallons)
4	Minimum Required Doses per Day
175	Maximum Dose Allowed (Gallons)
125	Chosen Dose Volume (Gallons)
5	Recommended Pumping Duration per Dose (Minutes)
24.00	Recommended Pumping Rate with Filter (GPM)
24.75	Recommended Pumping Rate with Filter (GPM)
Distribution Requirements	
10	Trench width (FT)
630	Total Trench Area (SF)
25	Maximum Allowable per Orifice Area (SF)
25	Required Number of Orifice Holes
52	Number of Orifice Holes Proposed
0.48	Avg. Flow per Orifice (GPM)
508.3	Effluent Elevation Head
TRENCH 1	
52	Total # of orifices
25.00	Total Flow (GPM)
700	Total Design Flow (GPD)
122	Total Length of Trench (FT)
37	Chosen Design Flow (GPM)
15.00	Total Actual Design Flow (GPM)
1.50%	Percent Distribution Design
4.64	Actual Duration of Pumping Cycle (minutes)

Distribution System Design
February 10, 2009

Distribution Pipe #1 and #2

1	Maximum Allowable application Rate per Square Foot (GPD/SF)
37	Design Pumping Rate to Entire Field (GPM)
1,250	Total Design Flow to Site (GPD)
552.7	Invert Elevation
Section 1	
3	Depth of Stone (inches)
1	Application Rate per Square Foot
122	Length of Section
1,250	Design Flow (GPD)
37.00	Design Flow (GPM)
52	Required Number of Orifices
Orifice Design	
0.125	Diameter of orifice (inches)
32	Number of orifices
2.6	Residual pressure (FT)
0.53	Design Flow per head (GPM)
16.93	Subtotal flow (GPM)
0.1875	Diameter of orifice (inches)
30	Number of orifices
2.6	Residual pressure (FT)
0.87	Design Flow per head (GPM)
20.35	Subtotal flow (GPM)
0.25	Diameter of orifice (inches)
0	Number of orifices
2.6	Residual pressure (FT)
1.15	Design Flow per head (GPM)
0.00	Subtotal flow (GPM)
62	Total # of orifices
37.28	Total Flow
-1.62%	Percent Distribution Design
122	Length of Distribution Pipe (FT)
2.00	Spacing of orifice holes (FT)
37.00	Total Recommended Design Flow for This Trench (GPM)
37.28	Total Actual Design Flow for this Trench (GPM)
1.50%	Percent Distribution Design
52	Required Number of Orifice Holes
52	Number of Orifice Holes Proposed
1,250	Total Design Flow (GPD)
1,244.00	Total Length of Trench (FT)

SITE ENGINEER:

CIVIL ENGINEERING ASSOCIATES, INC.
10 MANSFIELD VIEW LANE, SOUTH BURLINGTON, VT 05403
802-864-2323 FAX: 802-864-2271 web: www.cea-vt.com

COPYRIGHT © 2009 – ALL RIGHTS RESERVED

DRAWN: ACL
CHECKED: DSM
APPROVED: DSM

OWNER:
OLD TOWN TRAIL ASSOCIATES, LLC
86 LAKE STREET
BURLINGTON, VERMONT

PROJECT:
OLD TOWN TRAIL ASSOCIATES, LLC
2 LOT SUBDIVISION
OLD TOWN TRAIL
CHARLOTTE
VERMONT

DATE	CHECKED	REVISION

WASTEWATER SYSTEM DETAILS

DATE: APRIL, 2009
SCALE: AS SHOWN
PROJ. NO. 07239
DRAWING NUMBER: C4