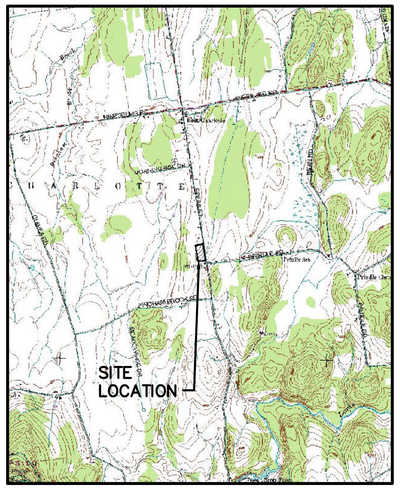

SITE LOCATION
NOT TO SCALE

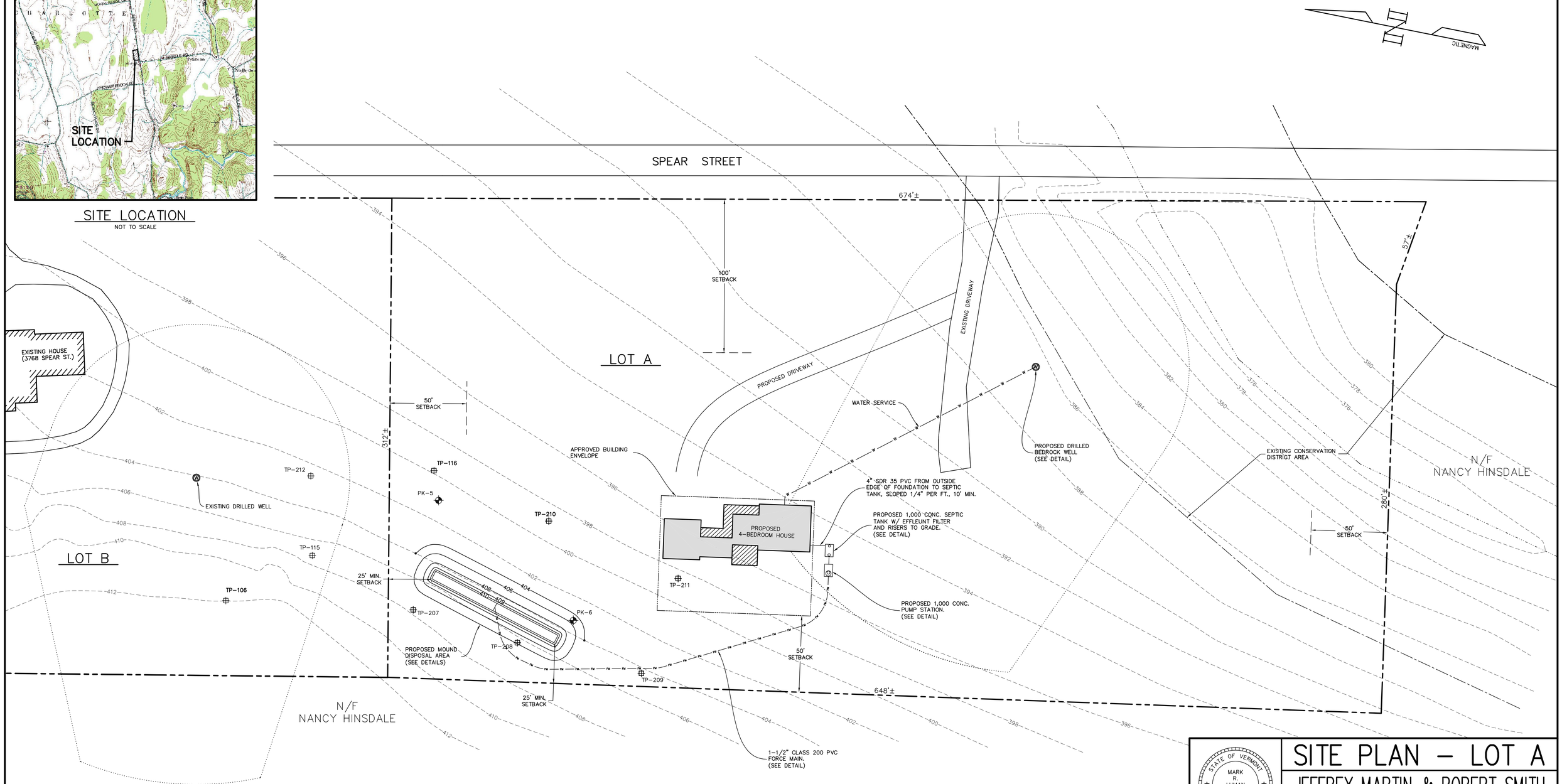

LEGEND

- EXISTING GROUND CONTOUR
- FINISH GRADE CONTOUR
- PERCOLATION TEST LOCATION
- TEST PIT LOCATION
- WELL SEPARATION ZONE
- BUILDING ENVELOPE
- PROPERTY BOUNDARY (APPROXIMATE)

SOURCE: BASE INFORMATION FROM MAP PREPARED BY CHAMPLAIN CONSULTING ENGINEERS DATED 6/20/05, AND REVISED ON 6/15/06.

GRAPHIC SCALE

30 0 15 30 60 120

(IN FEET)
1 inch = 30 ft.

STATE OF VERMONT
MARK R. LUMAN
NO. 458-B
LICENSED DESIGNER

SITE PLAN – LOT A

JEFFREY MARTIN & ROBERT SMITH

SPEAR STREET
CHARLOTTE, VERMONT

Heindel & Noyes, Inc.

H N

• Hydrogeology • Ecology •
• Environmental Engineering •
CONSULTING SCIENTISTS AND ENGINEERS

434 Shelburne Road - P.O. Box 4503
Burlington, Vermont 05406 (802) 658-0820

SCALE: NOTED	DATE: 5-12-09
DRAWN BY: MRL	PROJECT NO.: 09010
PROJECT MANAGER: MRL	APPROVED BY: MRL
FILE: z:\projects\martin-charlotte ww\siteplan.dwg	
SHEET 1 OF 3	

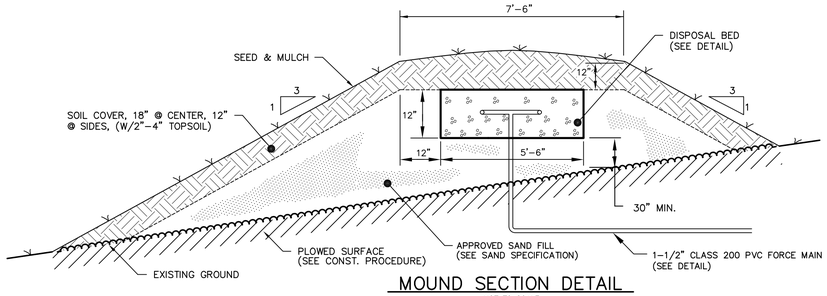

MOUND SECTION DETAIL

NOT TO SCALE

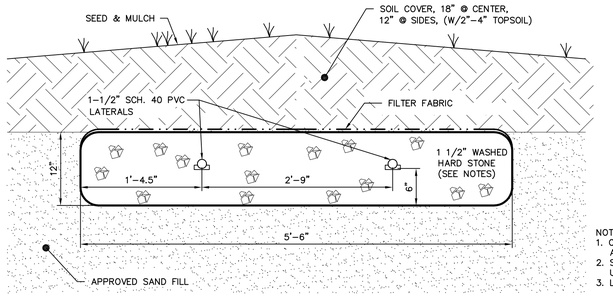

NOTES:
1. CRUSHED STONE SHALL BE WASHED AND FREE OF FINES.
2. STONE LESS THAN 3/4" IN SIZE IS UNACCEPTABLE.
3. LIMESTONE IS UNACCEPTABLE.

DISPOSAL BED DETAIL

NOT TO SCALE

Mound Sand Specifications

Mound sand should conform to one of the following specifications:

	% passing	sieve size	mm
1.	85 – 100%	3/8	9.500
	25 – 75	40	.42
	0 – 30	60	.24
	0 – 10	100	.149
	0 – 5	200	.074
2.	95 – 100%	4	4.75
	80 – 100	8	2.38
	50 – 85	16	1.19
	25 – 60	30	0.59
	10 – 30	50	0.297
	2 – 10	100	0.149
3.	85 – 100%	3/8	9.500
	30 – 50	40	.420
	5 – 10	200	.074

NOTE:
THE MOUND SAND MUST MEET THE SPECIFICATIONS (1), (2), OR (3) ABOVE. INTERPOLATION OF ANALYSES IS NOT PERMITTED. FILL MATERIAL (2) IS ASTM SPECIFICATIONS C-33 AND IS INTENDED FOR MANUFACTURED MATERIAL.

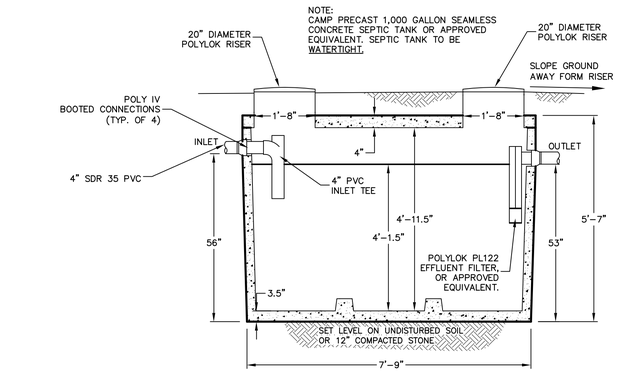

SEPTIC TANK w/EFFLUENT FILTER

NOT TO SCALE

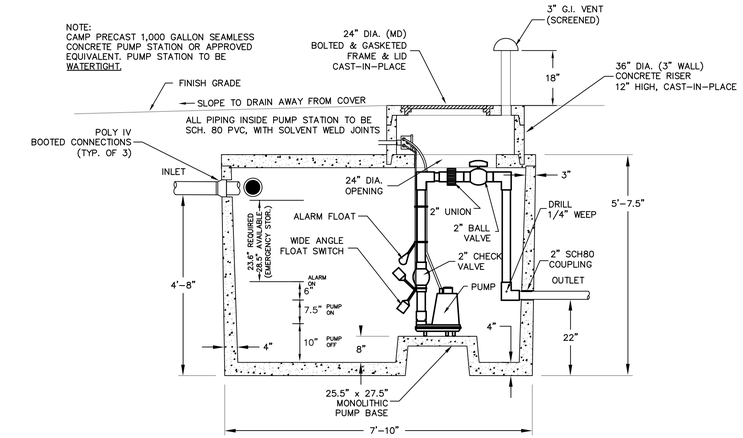

PUMP STATION NOTES:

1. PROVIDE A HIGH WATER AUDIO AND VISUAL ALARM, TO BE INSTALLED IN BUILDING.
2. PLACE EFFLUENT PUMP ON CONC. PAD TO ALLOW FOR SETTLEMENT OF SOLIDS.
3. PROVIDE 490 GALLONS OF STORAGE ABOVE THE ALARM FLOAT.
4. SUPPLIER TO CERTIFY SUITABILITY OF STATION BASED ON SITE CONDITIONS.
5. INSIDE TANK DIMENSIONS: 56"w X 86"l X 52"h (to inlet invert)
6. DOSE VOLUME: 156 GAL./DOSE. (INCLUDES VOLUME IN FORCE MAIN FOR DRAINBACK)
7. USE ONE HYDROMATIC MODEL SKHS50 1/2 H.P. SEWAGE EJECTOR PUMP, SINGLE PHASE, 230 VOLT, OR APPROVED EQUIVALENT.

PUMP STATION DETAIL

NOT TO SCALE

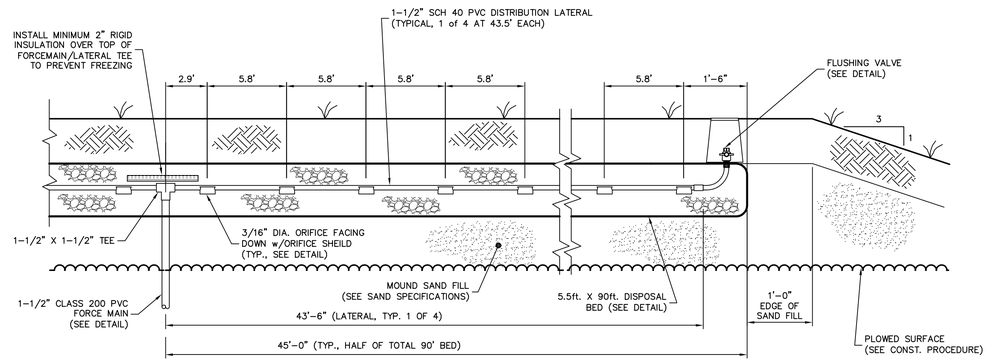

LATERAL/ORIFICE SPACING DETAIL

NOT TO SCALE

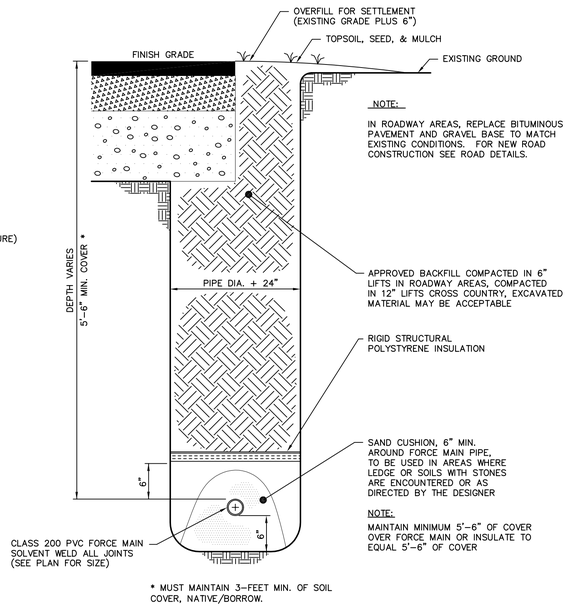

FORCE MAIN TRENCH DETAIL

NOT TO SCALE

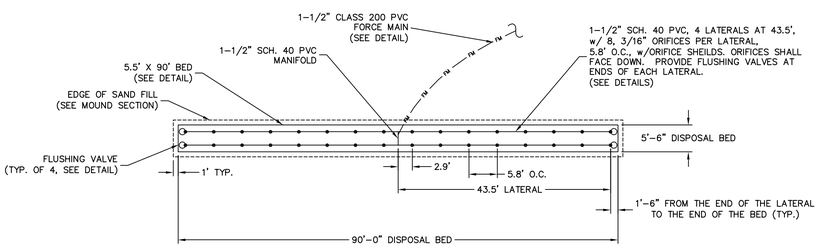

DISPOSAL BED LAYOUT DETAIL

NOT TO SCALE

MOUND CONSTRUCTION PROCEDURE

1. Contact the Design Engineer, prior to construction for an on-site meeting with the contractor to discuss the construction and to stake out the mound with the proper orientation according to the approved plan.
2. Closely cut and remove all above ground vegetation throughout the area to be covered by the fill material. Tree stumps should be cut flush with the ground surface, but the roots should not be removed. Prior to plowing, install the dosing discharge line from the point of connection with the distrubution piping header to beyond the mound construction area.
3. Plow the area to a depth of 7" to 8", parallel to the land contours with the plow throwing the soil uphill to provide a proper interface between the natural soils and fill material. Construction or plowing shall not be started when the soil moisture content is high. (If a sample of soil obtained approximately 9" below the surface can be easily rolled into a wire, the soil moisture content is too high for construction purposes.)
4. Place the sand texture soil (see mound sand specifications) around the edge of the plowed area by dumping it on the plowed area, but keep the wheels of the dump truck off the plowed area. Use a crawler tractor with a blade to move the sand around into place keeping at least 6" of sand under the tracks to minimize compaction of the plowed layer. Place all the sand needed in the mound, which will be to the top of the bed. Shape the sides to the desired slope.
5. With the blade of the tractor, form the bed by moving along its length. The sand walls will stay sufficiently stable. Make sure the bottom of the bed is level. Some hand shoveling will be necessary.
6. Using a bucket on the crawler, dump the stone in the bed by traveling up the side slope. Level the stones off at the desired elevation (6" above the bed bottom.)
7. Install the distribution piping as shown on the plan and contact the Design Engineer who will direct testing of the distribution system. Insure that the pipe is bedded properly with all dips and rises removed and cover the pipe with a minimum of 4" of the stone.
8. Place filter fabric over the top of the stone.
9. Crown the entire mound with a cover of soil less permeable than the mound fill, covering with 12" on the side slopes and a minimum of 18" over the center of the mound. Native soil from the site is normally suitable for cover material, though the top 2" to 4" of this cover should be topsoil.
10. Seed and mulch the entire mound to ensure stability of the installation. Shrubs placed at the foot and up the slope on the sides and ends are recommended. However, do not place shrubs directly on top of the mound as roots may interfere with the distribution system.

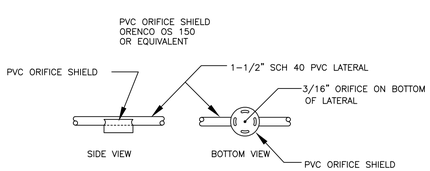

STANDARD ORIFICE SHIELD DETAIL

NOT TO SCALE

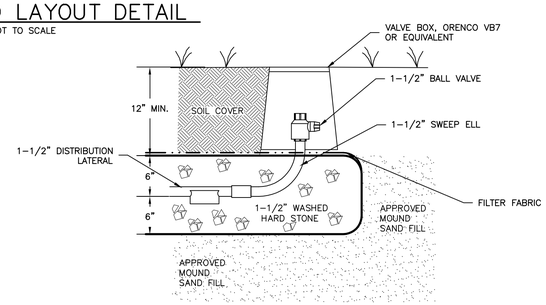

FLUSHING VALVE DETAIL

NOT TO SCALE

STATE OF VERMONT
MARK R. LUMAN
NO. 458-B
LICENSED DESIGNER

DETAILS

JEFFREY MARTIN & ROBERT SMITH
SPEAR STREET
CHARLOTTE, VERMONT

Heindel & Noyes, Inc.
• Hydrogeology • Ecology •
• Environmental Engineering •
CONSULTING SCIENTISTS AND ENGINEERS
434 Shelburne Road - P.O. Box 4503
Burlington, Vermont 05406 (802) 658-0820

SCALE: NOTED	DATE: 5-12-09
DRAWN BY: MRL	PROJECT NO.: 09010
PROJECT MANAGER: MRL	APPROVED BY: MRL
FILE: z:\projects\martin-charlotte ww\siteplan.dwg	

SOIL PROFILES:

(Soil test pits logged by Champlain Consulting Engineers on 4/26/05 and 9/26/05)

TP #106	0 - 8"	Dark brown loamy topsoil
	8" – 34"	Brown silt loam, friable to firm
		Mottling @ 14"
		No seepage to depth
		No water to depth
		No ledge to depth
TP # 115	0 - 9"	Dark brown loamy topsoil
	9" – 15"	Brown silt loam
	15" – 23"	Light brown clay loam
	23" – 36"	Light brown / gray clay loam
		Mottling @ 15"
		Seepage @ 32"
		Water @ 36"
		No ledge to depth
TP # 116	0 - 6"	Dark brown loamy topsoil
	6" – 10"	Brown silt loam
	10" – 20"	Light brown clay loam
	20" – 32"	Light brown / gray clay loam
		Mottling @ 12"
		Seepage @ 32"
		No ledge to depth
TP #207	0 - 8"	Dark brown loamy topsoil
	8" – 36"	Light brown silt loam
		Mottling @ 11"
		No seepage to depth
		No ledge to depth
TP #208	0 - 6"	Dark brown loamy topsoil
	6" – 34"	Light brown silt loam
		Mottling @ 11"
		No seepage to depth
		No ledge to depth
TP #209	0 - 8"	Dark brown loamy topsoil
	8" – 38"	Light brown silt loam
		Mottling @ 12"
		Seepage @ 40"
		No ledge to depth
TP #210	0 - 8"	Dark brown loamy topsoil
	8" – 38"	Light brown silt loam
		Mottling @ 11"
		Seepage @ 32"
		No ledge to depth
TP #211	0 - 8"	Dark brown loamy topsoil
	8" – 34"	Light brown silt loam
		Mottling @ 11"
		Seepage @ 30"
		No ledge to depth
TP #212	0 - 8"	Dark brown loamy topsoil
	8" – 32"	Light brown silt loam
		Mottling @ 12"
		Seepage @ 30"
		No ledge to depth

PERCOLATION TEST RESULTS:

(Percolation tests conducted by Champlain Consulting Engineers on 9/26/05)

PK-5	38 minutes/inch
PK-6	37 minutes/inch

MOUND BASIS OF DESIGN NOTES:

1. Mound Sewage Disposal System Design:

Proposed 4-bedroom single family residence with onsite water supply and wastewater disposal with a daily design flow of 490 gpd.

The maximum application rate when applying septic tank effluent for an absorption bed in a mound is 1.0 gal./s.f/day. Based upon a hydrogeologic study conducted by Craig D. Heindel, the maximum linear loading rate is 5.5 gal/l.f./day.

This design will utilize septic tank effluent with **30"** of mound sand fill material below the bed.

For a daily design flow of 490 gal./day at 5.5 gal./l.f./day, a minimum of 89.09 l.f. of bed is required.

Design uses (1), 5.5ft. x 90ft. absorption bed, with a minimum **30"** of mound sand fill beneath the gravel bed.

Design provides a total of 495 s.f. of disposal area beneath the gravel bed.

2. Basal Area:

Based on percolation rate of 37 minutes/inch, the effective basal application rate is 0.24 gal./s.f./day.

The required basal area is:

(490 gal./day) / (0.24 gal./s.f./day) = 2,042 s.f.

Minimum basal area provided by design is 2,250 s.f.

3. Pressure Distribution Design:

At one orifice per 25 s.f. of disposal area (495 total s.f.), a minimum of 19.8 orifices are required. Use 32 orifices on 4 laterals at 43.5 ft., with 8 orifices per line at 5.8' O.C.

For a 3/16" hole and a minimum pressure by design of 1.1 p.s.i. in the distribution network, the flow through any one orifice is:

$$Q = 12.38\,(d)^2\,(\sqrt{h})$$
$$= 12.38\,(0.1875)^2\,(\sqrt{2.5})$$
$$= 0.6881 \text{ g.p.m.}$$

Use 1-1/2" Sch. 40 P.V.C. piping with solvent weld joints.

4. Final Discharge Pump Basin Design & Pump Sizing:

Total head losses: (Worst Case)

Distribution piping =	3.6'
384' of 1-1/2" P.V.C. @ 22.1 g.p.m. =	8.3'
Elevation =	20'
Total Dynamic Head =	31.9'

Length of 1-1/2" PVC piping includes 100 FT. for friction loss in pump station piping.

Use a Hydromatic ½ HP, SKHS50 Sewage Pump, single phase, 230 volt, or approved equivalent; Pump to provide 22.1 g.p.m. against 31.9 feet Total Dynamic Head.

5. Topographic & Boundary Information:

Topographic and Boundary information from Champlain Consulting Engineers drawing dated 6/20/05, revised 6/15/06.

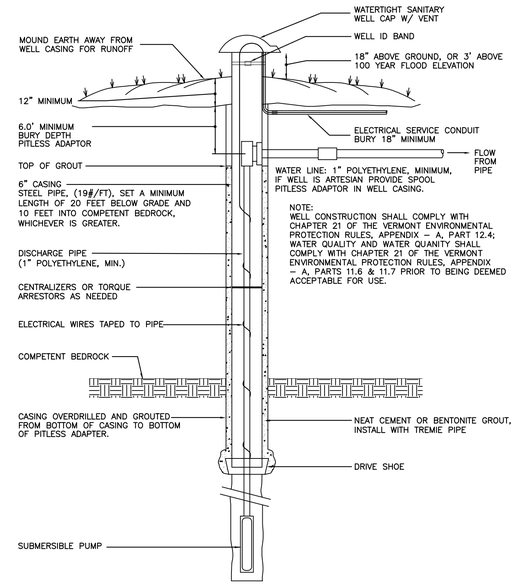

BEDROCK WELL INSTALLATION DETAIL

NOT TO SCALE

WATER SUPPLY DESIGN NOTES:

1. The proposed drilled well is to be located as shown on the Site Plan. Locations for drilled wells on any lots created in the future must meet the requirements of the Vermont Environmental Protection Rules, (Vermont Water Supply Rule - Chapter 21, Appendix A, Part 11.4), including the following minimum isolation distances:

Source of Contamination:	Isolation Distance:
Septic Tanks & Pump Stations:	50 feet
Sewer lines & Force Mains:	50 feet
Buildings:	10 feet
Drives:	15 feet

2. Maintain a 25-foot minimum isolation distance between water service lines and wastewater disposal system and related tanks. Maintain a minimum 10-foot horizontal distance between sewer service lines and water service lines.

3. Well Yield:

   The Average Day Demand, (ADD), for a proposed four bedroom house is 490 gal./day. The Maximum Day Demand, (MDD) is calculated by dividing the ADD by not more than 720 minutes. The resulting flow rate is expressed in gallons per minute and equals the minimum well yield allowed without required storage. The MDD is:

   (490 gal./day) / (720 minutes) = 0.68 gallons per minute.

   However, wells that have yields less than the Instantaneous Peak Demand of 5 gallons per minute may require some type of storage.

4. Conventional water saving plumbing fixtures including, but not limited to, maximum 3 ½ gallons per flush toilets, maximum 2 g.p.m. low flow showerheads and faucet aerators will be used in the proposed houses.

5. The Owner shall provide a well log report to the Design Engineer detailing construction and yield before it is deemed ready for use. By this plan the Design Engineer makes no guarantee as to well yield or quality.

NOTICE TO PROPERTY OWNER

1. The information shown on these plans represents the results of a field survey intended to produce a design in accordance with local and state guidelines.

2. Prior to engaging a contractor or commencing construction, the owner is encouraged to study this information and/or solicit information from the Design Engineer.

3. The owner is encouraged to seek professional assistance in monitoring and certifying compliance with the approved plans. The owner or contractor is responsible for coordinating the schedule of construction and construction supervision.

4. The owner/contractor is responsible for assuring proper certification testing and inspections are carried out in accordance with the notes and details provided on these drawings and all State requirements.

5. Before commencing construction, all applicable state and local permits must be secured by the owner. This is the responsibility of the owner, not the Design Engineer.

6. This office will not certify any construction of systems depicted on these drawings unless:

   A. Prior to all construction arrangements are made with this office to provide such certification services;

   B. Construction is completed in strict adherence with the approved project plans;

   C. All changes to these plans, whether or not independently observable by the Design Engineer, are to be reported to the Design Engineer by the Contractor for a suitability determination; and

   D. All changes to the approved project plans have been authorized by this office and approved by all appropriate reviewing agencies.

STATE OF VERMONT
MARK R. LUMAN
NO. 458-B
LICENSED DESIGNER

DESIGN NOTES & DETAILS

JEFFREY MARTIN & ROBERT SMITH
SPEAR STREET
CHARLOTTE, VERMONT

Heindel & Noyes, Inc.

H N

• Hydrogeology • Ecology •
• Environmental Engineering •
CONSULTING SCIENTISTS AND ENGINEERS

434 Shelburne Road - P.O. Box 4503
Burlington, Vermont 05406 (802) 658-0820

SCALE: NOTED	DATE: 5-12-09
DRAWN BY: MRL	PROJECT NO.: 09010
PROJECT MANAGER: MRL	APPROVED BY: MRL
FILE: z:\projects\martin-charlotte ww\siteplan.dwg	
SHEET 3 OF 3	