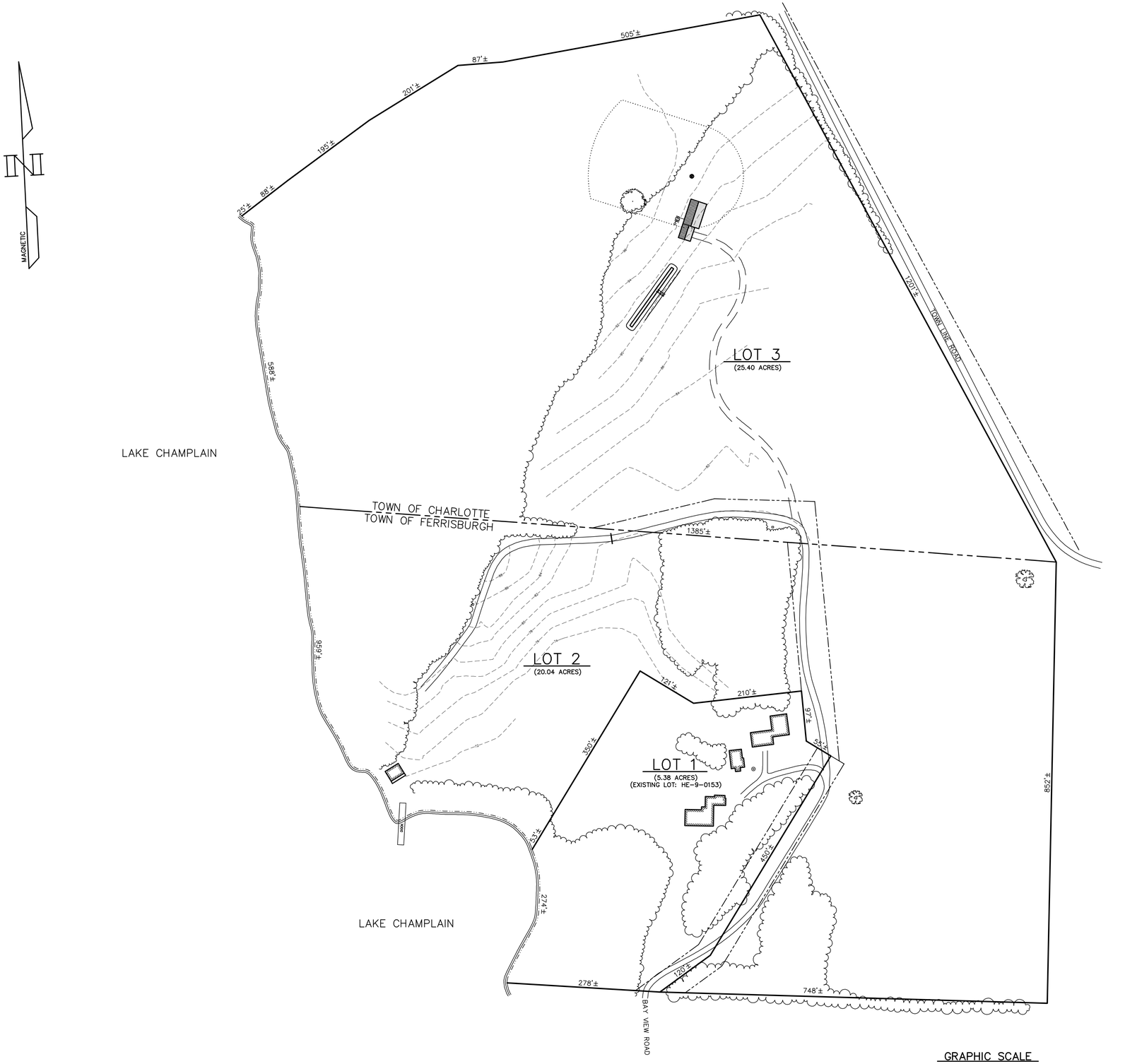

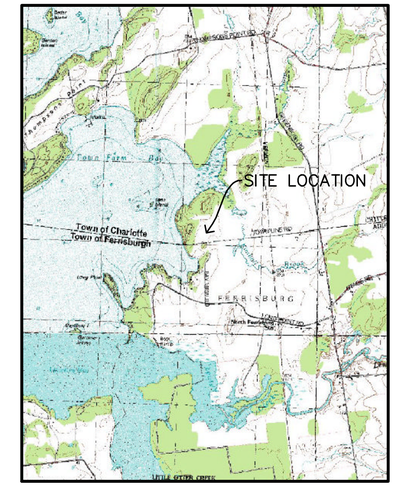

SITE LOCUS
NOT TO SCALE

GRAPHIC SCALE
100 0 50 100 200 400
(IN FEET)
1 inch = 100 ft.

STATE OF VERMONT
MARK R. LUMAN
NO. 458-B
LICENSED DESIGNER

OVERALL SITE PLAN

SALLY KNOWLTON
FERRISBURGH & CHARLOTTE, VERMONT

Heindel & Noyes, Inc.
• Hydrogeology • Ecology •
• Environmental Engineering •
CONSULTING SCIENTISTS AND ENGINEERS
434 Shelburne Road - P.O. Box 4503
Burlington, Vermont 05406 (802) 658-0820

SCALE: NOTED	DATE: 10-20-08
DRAWN: MRL	PROJECT NO.: 07331
PROJECT MANAGER: MRL	APPROVED: MRL
FILE: z:\knowlton\charlotte.dwg	☐ DRAFT ☒ FINAL
SHEET 1 OF 4	

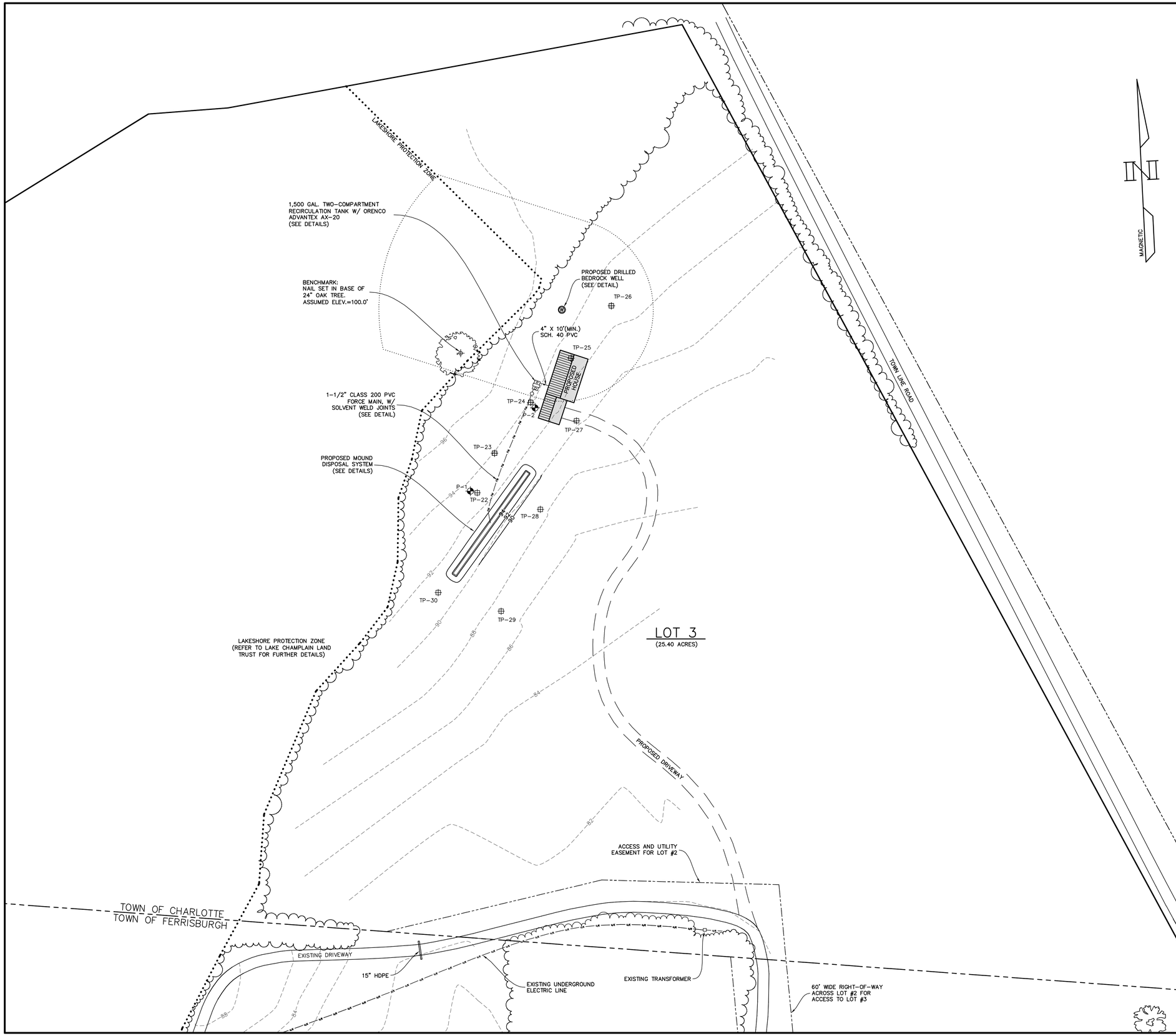

LEGEND

- EXISTING GROUND CONTOUR (Minor/Major)
- FINISH GRADE CONTOUR
- PERCOLATION TEST LOCATION
- TEST PIT LOCATION
- WELL SEPARATION ZONE
- PROPERTY BOUNDARY
- PROPOSED LOT LINE
- FORCE MAIN
- TREE LINE
- RIGHT-OF-WAY / EASEMENT

GRAPHIC SCALE

50 0 25 50 100 200

(IN FEET)
1 inch = 50 ft.

STATE OF VERMONT
MARK R. LUMAN
NO. 458-B
LICENSED DESIGNER

SITE PLAN

SALLY KNOWLTON
TOWN LINE ROAD
CHARLOTTE, VERMONT

Heindel & Noyes, Inc.

H N

• Hydrogeology • Ecology •
• Environmental Engineering •
CONSULTING SCIENTISTS AND ENGINEERS

434 Shelburne Road - P.O. Box 4503
Burlington, Vermont 05406 (802) 658-0820

SCALE: NOTED	DATE: 10-20-08
DRAWN: MRL	PROJECT NO.: 07331
PROJECT MANAGER: MRL	APPROVED: MRL
FILE: z:\knowlton\charlotte.dwg	☐ DRAFT ☒ FINAL
SHEET 2 OF 4	

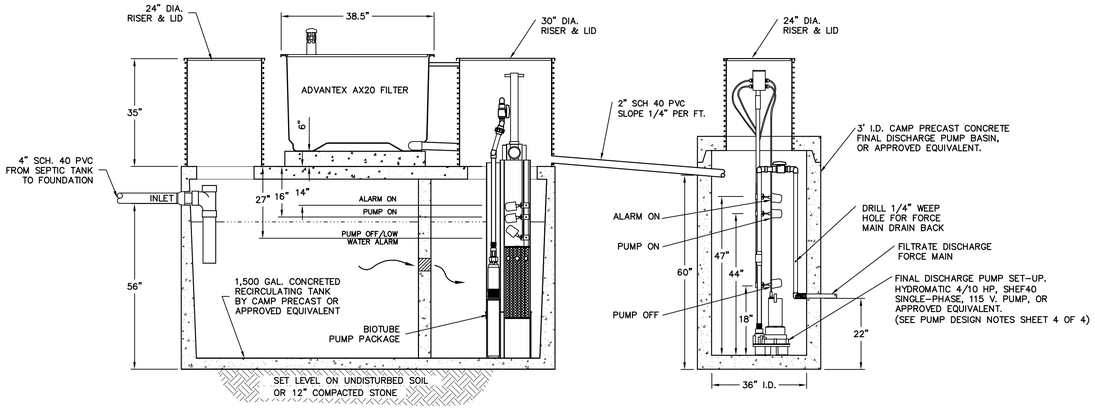

SECTION VIEW

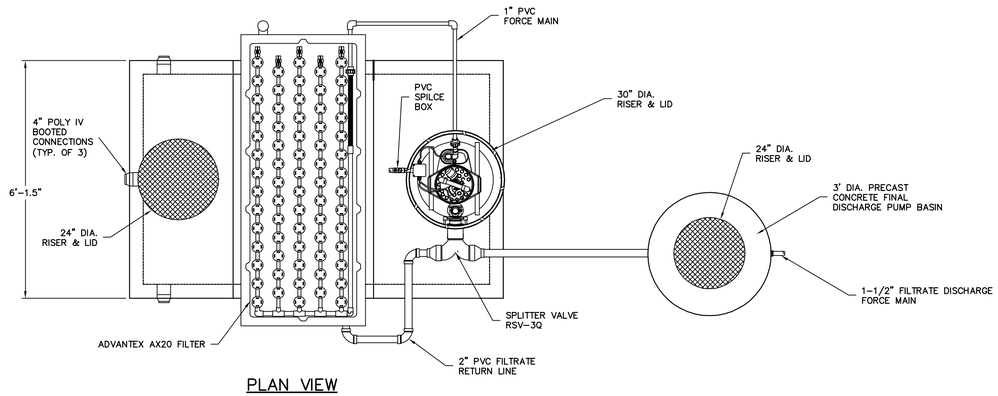

PLAN VIEW

1,500 GALLON TWO-COMPARTMENT CONCRETE RECIRCULATION TANK WITH ADVANTEX AX-20 SERIES MODE 1-B DETAIL

NOT TO SCALE

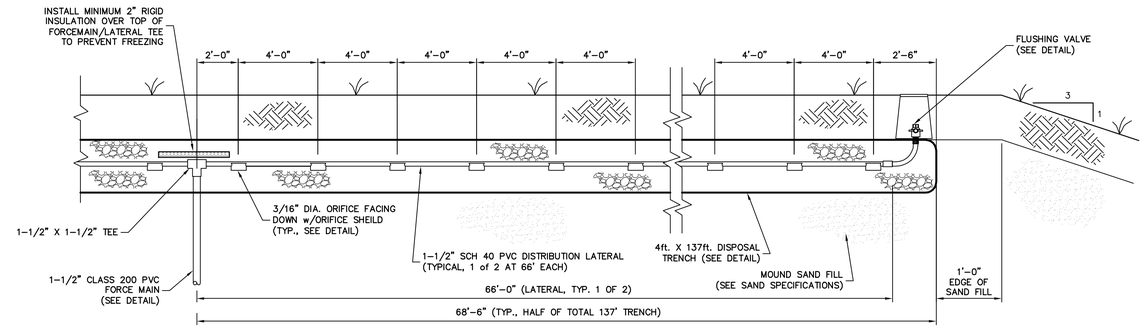

LATERAL/ORIFICE SPACING DETAIL

NOT TO SCALE

Mound Sand Specifications

Mound sand should conform to one of the following specifications:

	% passing	sieve size	mm
1.	85 – 100% 25 – 75 0 – 30 0 – 10 0 – 5	3/8 40 60 100 200	9.500 .42 .24 .149 .074
2.	95 – 100% 80 – 100 50 – 85 25 – 60 10 – 30 2 – 10	4 8 16 30 50 100	4.75 2.38 1.19 0.59 0.297 0.149
3.	85 – 100% 30 – 50 5 – 10	3/8 40 200	9.500 .420 .074

NOTE:
THE MOUND SAND MUST MEET THE SPECIFICATIONS (1), (2), OR (3) ABOVE. INTERPOLATION OF ANALYSES IS NOT PERMITTED. FILL MATERIAL (2) IS ASTM SPECIFICATIONS C-33 AND IS INTENDED FOR MANUFACTURED MATERIAL.

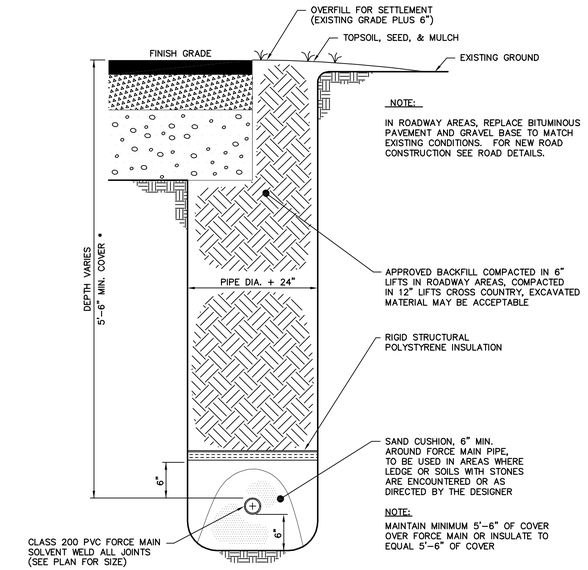

FORCE MAIN TRENCH DETAIL

NOT TO SCALE

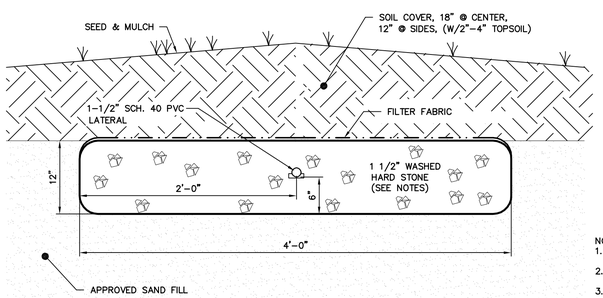

NOTES:
1. CRUSHED STONE SHALL BE WASHED AND FREE OF FINES.
2. STONE LESS THAN 3/4" IN SIZE IS UNACCEPTABLE.
3. LIMESTONE IS UNACCEPTABLE.

DISPOSAL TRENCH DETAIL

NOT TO SCALE

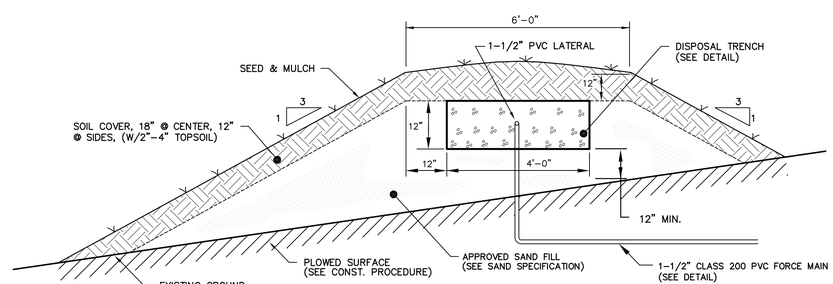

MOUND SECTION DETAIL

NOT TO SCALE

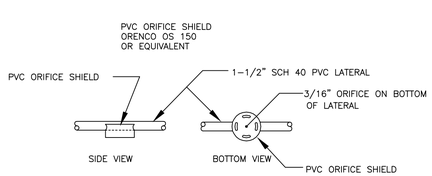

STANDARD ORIFICE SHIELD DETAIL

NOT TO SCALE

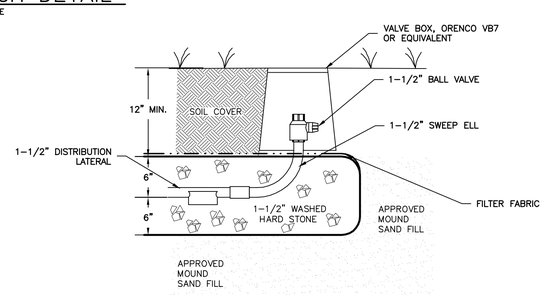

FLUSHING VALVE DETAIL

NOT TO SCALE

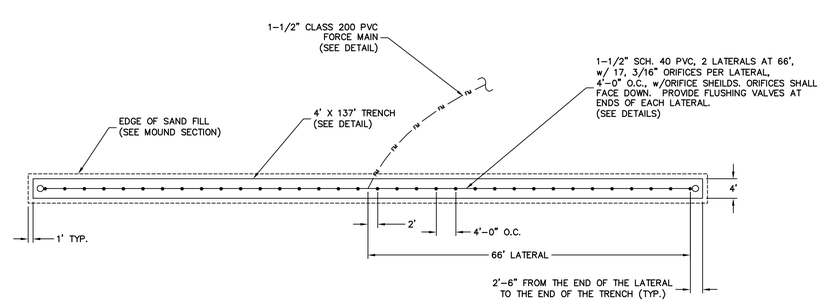

MOUND LAYOUT DETAIL

NOT TO SCALE

STATE OF VERMONT — MARK R. LUMAN NO. 458-B — LICENSED DESIGNER

WASTEWATER DISPOSAL DETAILS

SALLY KNOWLTON
TOWN LINE ROAD
CHARLOTTE, VERMONT

Heindel & Noyes, Inc.
• Hydrogeology • Ecology •
• Environmental Engineering •
CONSULTING SCIENTISTS AND ENGINEERS
434 Shelburne Road - P.O. Box 4503
Burlington, Vermont 05406 (802) 658-0820

SCALE: NOTED	DATE: 10-20-08
DRAWN: MRL	PROJECT NO.: 07331
PROJECT MANAGER: MRL	APPROVED: MRL
FILE: z:\knowlton\charlotte.dwg	☐ DRAFT ☒ FINAL
SHEET 3 OF 4	

MOUND BASIS OF DESIGN NOTES

1. Mound Sewage Disposal System Design:

Proposed improvement of existing 25 +/- acre parcel designed for a 4-bedroom single family residence with a wastewater disposal mound at 490 gpd.

The maximum application rate when applying septic tank effluent for absorption trenches in a mound = 1.0 gal./s.f/day, however when applying filtrate effluent the application may be twice the rate, or 2 gal./s.f./day, however based upon a hydrogeologic study conducted by Craig D. Heindel, the maximum linear loading rate is 3.58 gal/l.f./day.

This design will utilize filtrate effluent from an Orenco Advantex system, with 12" of mound sand fill material below the trench.

For a daily design flow of 490 gal./day at 3.58 gal./l.f./day, a minimum of 136.87 l.f. of trench is required.

Design uses (1), 4ft. x 137ft. disposal trench, with a minimum 12" of mound sand fill beneath the trench.

Design provides a total of 548 s.f. of disposal area beneath the gravel trench.

2. Basal Area:

Based on percolation rates of 60-120 minutes/inch, the effective basal application rate is 0.24 gal./s.f./day.

The required basal area is:

(490 gal./day) / (0.24 gal./s.f./day) = 2,042 s.f.

Minimum basal area provided by design is 2,329 s.f.

3. Pressure Distribution Design:

At one orifice per 25 s.f. of disposal area (548 total s.f.), a minimum of 21.92 orifices are required. Use 34 orifices on 2 laterals at 66 ft., with 17 orifices per line at 4'-0" O.C.

For a 3/16" hole and a minimum pressure by design of 1.3 p.s.i. (3 ft.) in the distribution network, the flow through any one orifice is:

$$Q = 12.38\,(d)^2\,(\sqrt{h})$$
$$= 12.38\,(0.1875)^2\,]\,\sqrt{3}$$
$$= 0.7538 \text{ g.p.m.}$$

Use 1-1/2" Sch. 40 P.V.C. piping with solvent weld joints.

Find the head loss along the lateral assuming a central manifold:

Orifice #	Orifice Pressure (ft.)	Orifice Flow (gpm)	Total Lateral Flow (gpm)	Segment headloss (ft.)	Lateral Length (ft.)	Sum of Headloss (ft.)
1	3.0000	0.7538	0.7538	0.0002	2.00	0.0002
2	3.0002	0.7539	1.5077	0.0008	6.00	0.0011
3	3.0011	0.7540	2.2617	0.0018	10.00	0.0028
4	3.0028	0.7542	3.0159	0.0030	14.00	0.0059
5	3.0059	0.7546	3.7705	0.0046	18.00	0.0104
6	3.0104	0.7552	4.5257	0.0064	22.00	0.0168
7	3.0168	0.7560	5.2816	0.0085	26.00	0.0253
8	3.0253	0.7570	6.0386	0.0109	30.00	0.0362
9	3.0362	0.7584	6.7970	0.0136	34.00	0.0498
10	3.0498	0.7601	7.5571	0.0165	38.00	0.0663
11	3.0663	0.7621	8.3192	0.0197	42.00	0.0860
12	3.0860	0.7646	9.0838	0.0232	46.00	0.1092
13	3.1092	0.7674	9.8512	0.0269	50.00	0.1361
14	3.1361	0.7708	10.6220	0.0310	54.00	0.1671
15	3.1671	0.7746	11.3966	0.0353	58.00	0.2024
16	3.2024	0.7789	12.1754	0.0399	62.00	0.2423
17	3.2423	0.7837	12.9591	0.0448	66.00	0.2870

4. Final Discharge Pump Basin Design & Pump Sizing:

Total head losses: (Worst Case)

Distribution piping =	4.6'
246' of 1-1/2" P.V.C. @ 25.9 g.p.m. =	7.2'
Elevation =	7.0'
Total Dynamic Head =	18.8'

Length of 1-1/2" PVC piping includes 100 FT. for friction loss in pump station piping.

Use a Hydromatic 4/10 HP, SHEF40 Effluent Pump, single phase, 115 volt, or approved equivalent; Pump to provide 25.9 g.p.m. against 18.8 feet Total Dynamic Head.

Minimum dose volume is 5 times the total volume of the piping within the mound disposal network. Total volume of 132 l.f. of 1-1/2" sch. 40 PVC lateral at 0.106 gal./ft. = 14 gallons.

Total volume of 146 l.f. of 1-1/2" Class 200 PVC force main at 0.121 gal./ft. = 18 gallons. Pump basin dose volume shall accommodate drain back of force main.

Mound shall be dosed a minimum of 4 times per day. This design provides for a maximum of 5 times per day at 98 gallons per dose (490 gpd / 5 = 98 gallons). Additional 18 gallons per dose to account for volume in force main. Total dose volume = 116 gallons/dose.

36 inch I.D. concrete pump basin calculated at 4.41 gallons per inch. Total dose volume of 116 gallons/4.41 gal./in. = 26 inches.

5. Topographic & Boundary Information:

Topographic information from survey conducted by Heindel & Noyes, Inc., and boundary information from survey by Krebs & Lansing Consulting Engineers, Inc. dated October 1992, revised November 17, 1992.

SOIL PROFILES:

(Soil Profiles logged by Mark R. Luman, Licensed Designer #458-B on May 19, 2008, and observed by Spencer Harris for the Town of Charlotte)

TP-22
- 0-4" Loamy, silty topsoil
- 4"-30" Compact, friable olive-brown silt loam, gray at bottom of layer, tan mottles @ 11"
- No water to depth
- No bedrock to depth

TP-23
- 0-5" Loamy, silty topsoil
- 5"-38" Compact, friable olive –brown silt loam, staining @ 12"-13", bright tannish/gray mottles @ 20"
- No water to depth
- No bedrock to depth

TP-24
- 0-6" Loamy, silty topsoil
- 6"-39" Compact, friable olive –brown silt loam, staining @ 12"-13", bright gray mottles @ 24"
- No water to depth
- No bedrock to depth

TP-25
- 0-6" Loamy, silty topsoil
- 6"-40" Yellowish-gray, silt loam, less compact, friable, mottles @ 12"
- No water to depth
- No bedrock to depth

TP-26
- 0-6" Loamy, silty topsoil
- 6"-42" Olive-gray, silt loam, compact, friable, mottles @ 12"
- No water to depth
- No bedrock to depth

TP-27
- 0-7" Loamy, silty topsoil
- 7"-28" Olive-brown, silt loam, friable, yellow mottles @ 11" Bright gray mottles @ bottom
- No water to depth
- No bedrock to depth

TP-28
- 0-8" Loamy, silty topsoil
- 8"-29" Brown, silt loam, friable, yellowish gray mottles @ 11"
- No water to depth
- No bedrock to depth

TP-29
- 0-7" Loamy, silty topsoil
- 7"-30" Brown, silt loam, friable, yellow mottles @ 11", gray silt at bottom
- No water to depth
- No bedrock to depth

TP-30
- 0-8" Loamy, silty topsoil
- 8"-31" Brown, silt loam, friable, gray mottles @ 11", gray silt at bottom
- No water to depth
- No bedrock to depth

PERCOLATION TESTING:

PT-1 77 minutes/inch
PT-2 85 minutes/inch

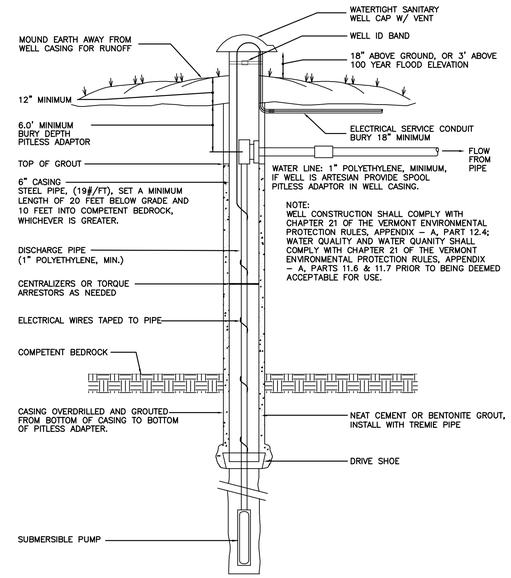

BEDROCK WELL INSTALLATION DETAIL

NOT TO SCALE

WATER SUPPLY DESIGN NOTES:

1. The proposed drilled well is to be located as shown on the Site Plan. Locations for drilled wells on any lots created in the future must meet the requirements of the Vermont Environmental Protection Rules, (Vermont Water Supply Rule - Chapter 21, Appendix A, Part 11.4), including the following minimum isolation distances:

Source of Contamination:	Isolation Distance:
Septic Tanks & Pump Stations:	50 feet
Sewer lines & Force Mains:	50 feet
Buildings:	10 feet
Drives:	15 feet

2. Maintain a 25-foot minimum isolation distance between water service lines and wastewater disposal system and related tanks. Maintain a minimum 10-foot horizontal distance between sewer service lines and water service lines.

3. Well Yield:

   The Average Day Demand, (ADD), for a proposed four bedroom house is 490 gal./day. The Maximum Day Demand, (MDD) is calculated by dividing the ADD by not more than 720 minutes. The resulting flow rate is expressed in gallons per minute and equals the minimum well yield allowed without required storage. The MDD is:

   (490 gal./day) / (720 minutes) = 0.68 gallons per minute.

   However, wells that have yields less than the Instantaneous Peak Demand of 5 gallons per minute may require some type of storage.

4. Conventional water saving plumbing fixtures including, but not limited to, maximum 3 ½ gallons per flush toilets, maximum 2 g.p.m. low flow showerheads and faucet aerators will be used in the proposed houses.

5. The Owner shall provide a well log report to the Design Engineer detailing construction and yield before it is deemed ready for use. By this plan the Design Engineer makes no guarantee as to well yield or quality.

NOTICE TO PROPERTY OWNER

1. The information shown on these plans represents the results of a field survey intended to produce a design in accordance with local and state guidelines.

2. Prior to engaging a contractor or commencing construction, the owner is encouraged to study this information and/or solicit information from the Design Engineer.

3. The owner is encouraged to seek professional assistance in monitoring and certifying compliance with the approved plans. The owner or contractor is responsible for coordinating the schedule of construction and construction supervision.

4. The owner/contractor is responsible for assuring proper certification testing and inspections are carried out in accordance with the notes and details provided on these drawings and all State requirements.

5. Before commencing construction, all applicable state and local permits must be secured by the owner. This is the responsibility of the owner, not the Design Engineer.

6. This office will not certify any construction of systems depicted on these drawings unless:

   A. Prior to all construction arrangements are made with this office to provide such certification services;

   B. Construction is completed in strict adherence with the approved project plans;

   C. All changes to these plans, whether or not independently observable by the Design Engineer, are to be reported to the Design Engineer by the Contractor for a suitability determination; and

   D. All changes to the approved project plans have been authorized by this office and approved by all appropriate reviewing agencies.

MOUND CONSTRUCTION PROCEDURE

1. Contact the Design Engineer, prior to construction for an on–site meeting with the contractor to discuss the construction and to stake out the mound with the proper orientation according to the approved plan.
2. Closely cut and remove all above ground vegetation throughout the area to be covered by the fill material. Tree stumps should be cut flush with the ground surface, but the roots should not be removed. Prior to plowing, install the dosing discharge line from the point of connection with the distrubution piping header to beyond the mound construction area.
3. Plow the area to a depth of 7" to 8", parallel to the land contours with the plow throwing the soil uphill to provide a proper interface between the natural soils and fill material. Construction or plowing shall not be started when the soil moisture content is high. (If a sample of soil obtained approximately 9" below the surface can be easily rolled into a wire, the soil moisture content is too high for construction purposes.)
4. Place the sand texture soil (see mound sand specifications) around the edge of the plowed area by dumping it on the plowed area, but keep the wheels of the dump truck off the plowed area. Use a crawler tractor with a blade to move the sand around into place keeping at least 6" of sand under the tracks to minimize compaction of the plowed layer. Place all the sand needed in the mound, which will be to the top of the bed. Shape the sides to the desired slope.
5. With the blade of the tractor, form the trench by moving along its length. The sand walls will stay sufficiently stable. Make sure the bottom of the trench is level. Some hand shoveling will be necessary.
6. Using a bucket on the crawler, dump the stone in the bed by traveling up the side slope. Level the stones off at the desired elevation (6" above the trench bottom.)
7. Install the distribution piping as shown on the plan and contact the Design Engineer who will direct testing of the distribution system. Insure that the pipe is bedded properly with all dips and rises removed and cover the pipe with a minimum of 4" of the stone.
8. Place filter fabric over the top of the stone.
9. Crown the entire mound with a cover of soil less permeable than the mound fill, covering with 12" on the side slopes and a minimum of 18" over the center of the mound. Native soil from the site is normally suitable for cover material, though the top 2" to 4" of this cover should be topsoil.
10. Seed and mulch the entire mound to ensure stability of the installation. Shrubs placed at the foot and up the slope on the sides and ends are recommended. However, do not place shrubs directly on top of the mound as roots may interfere with the distribution system.

STATE OF VERMONT
MARK R. LUMAN NO. 458-B
LICENSED DESIGNER

DESIGN NOTES & DETAILS

SALLY KNOWLTON
TOWN LINE ROAD
CHARLOTTE, VERMONT

Heindel & Noyes, Inc.
• Hydrogeology • Ecology •
• Environmental Engineering •
CONSULTING SCIENTISTS AND ENGINEERS
434 Shelburne Road - P.O. Box 4503
Burlington, Vermont 05406 (802) 658-0820

SCALE: NOTED	DATE: 10-20-08
DRAWN: MRL	PROJECT NO.: 07331
PROJECT MANAGER: MRL	APPROVED: MRL
FILE: z:\knowlton\charlotte.dwg	☐ DRAFT ☒ FINAL
SHEET 4 OF 4	