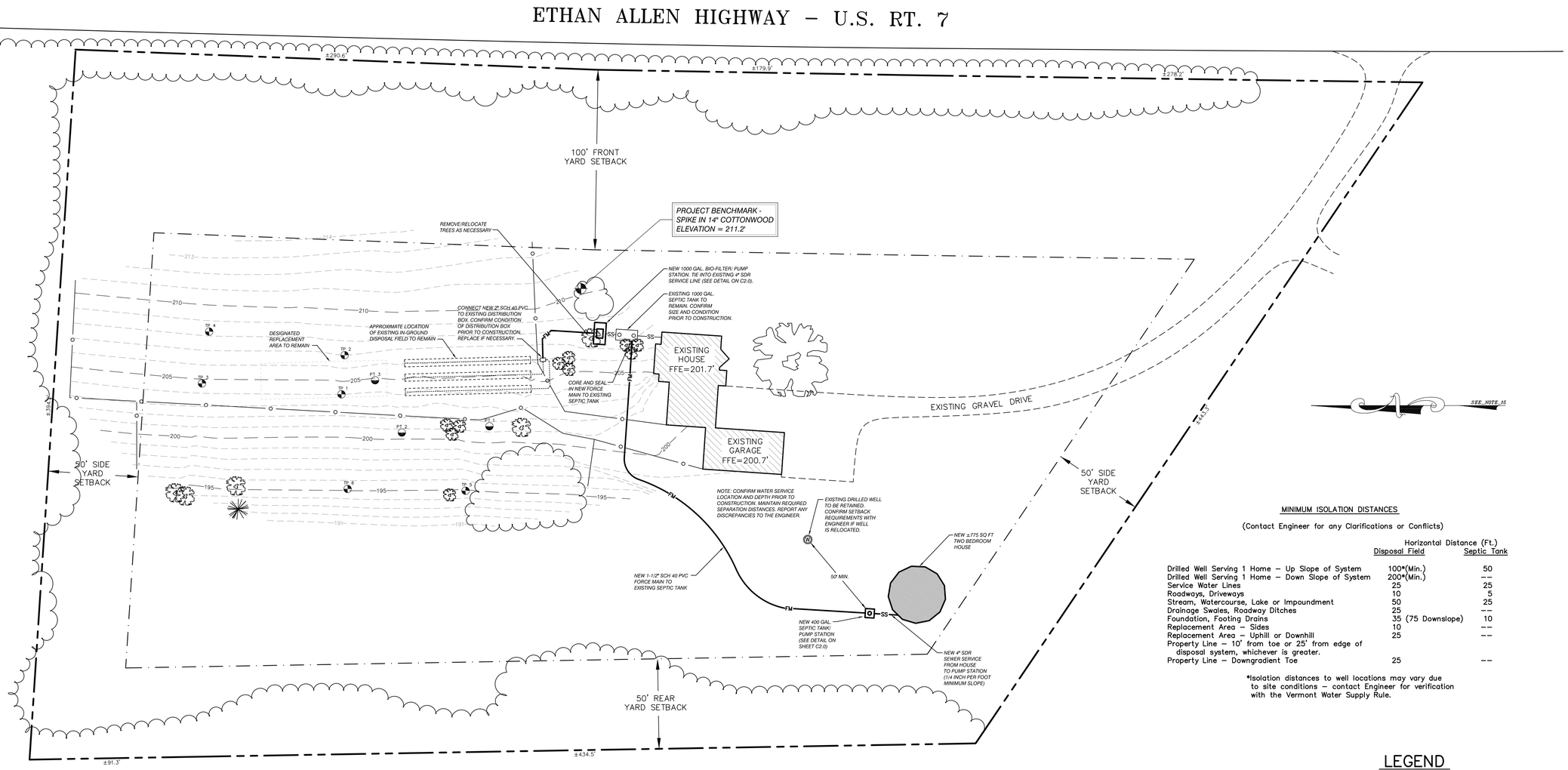

MINIMUM ISOLATION DISTANCES

(Contact Engineer for any Clarifications or Conflicts)

	Horizontal Distance (Ft.) Disposal Field	Septic Tank
Drilled Well Serving 1 Home – Up Slope of System	100*(Min.)	50
Drilled Well Serving 1 Home – Down Slope of System	200*(Min.)	--
Service Water Lines	25	25
Roadways, Driveways	10	5
Stream, Watercourse, Lake or Impoundment	50	25
Drainage Swales, Roadway Ditches	25	--
Foundation, Footing Drains	35 (75 Downslope)	10
Replacement Area – Sides	10	--
Replacement Area – Uphill or Downhill	25	--
Property Line – 10' from toe or 25' from edge of disposal system, whichever is greater.		
Property Line – Downgradient Toe	25	--

*Isolation distances to well locations may vary due to site conditions – contact Engineer for verification with the Vermont Water Supply Rule.

GENERAL NOTES

1. Utilities shown do not purport to constitute or represent all utilities located upon or adjacent to the surveyed premises. Existing utility locations are approximate only. The Contractor shall field verify all utility conflicts. All discrepancies shall be reported to the Engineer. The Contractor shall contact Dig Safe (888–344–7233) prior to any construction.

2. All existing utilities not incorporated into the final design shall be removed or abandoned as indicated on the plans or directed by the Engineer.

3. The Contractor shall maintain as–built plans (with ties) for all underground utilities. Those plans shall be submitted to the Owner at the completion of the project.

4. The Contractor shall repair/restore all disturbed areas (on or off the site) as a direct or indirect result of the construction.

5. All grassed areas shall be maintained until full vegetation is established.

6. Maintain all trees outside of construction limits.

7. The Contractor shall be responsible for all work necessary for complete and operable facilities and utilities.

8. The Contractor shall submit shop drawings for all items and materials incorporated into the site work. Work shall not begin on any item until shop drawing approval is granted.

9. In addition to the requirements set in these plans and specifications, the Contractor shall complete the work in accordance with all permit conditions and any local Public Works Standards.

10. Any dewatering necessary for the completion of the sitework shall be considered as part of the contract and shall be the Contractor's responsibility.

11. The Contractor shall install the electrical, cable and telephone services in accordance with the utility companies requirements.

12. Existing pavement and tree stumps to be removed shall be disposed of at an approved off–site location. All pavement cuts shall be made with a pavement saw.

13. If there are any conflicts or inconsistencies with the plans or specifications, the Contractor shall contact the Engineer for verification before work continues on the item in question.

14. Property line information is based on a plan entitled "Plat of Survey – John W. Ladd & Janet B. Ladd", prepared by John A. Marsh, L.S., dated 6/10/86 and recorded in Map Volume 7, Page 29 of the Charlotee Land Records. This plan is not a boundary survey and is not intended to be used as one.

15. Vertical datum based on a scaled elevation from a UGSG Quad Topo map. Horizontal datum based on bearings referenced in the plat described in note 14.

16. Site information based upon a compilation of a field survey and the following existing site plans on file in the Charlotte Zoning Office under 6328 Ethan Allen Highway:

A. "Plot Plan – Proposed Ladd Subdivision", prepared by Steve Rowell, dated 8/3/86.

B. "Site Plan – Tugend Property", prepared by Thomes Tujend, dated 7/26/89.

ZONING REQUIREMENTS

ZONING DISTRICT: RURAL

DIMENSIONAL STANDARDS:

	REQUIRED	EXISTING	PROPOSED
MINIMUM LOT AREA (AC.)	5	5.55	5.55
MINIMUM DENSITY (AC./DWELLING)	5	–	–
MINIMUM FRONTAGE (FT.)	300	±750	±750
MINIMUM FRONT SETBACK (FT.)	100	±145	±145
MINIMUM SIDE SETBACK (FT.)	50	±150	±60
MINIMUM REAR SETBACK (FT.)	50	±150	±70
MAXIMUM BUILDING HEIGHT (FT.)	35	<35	<35
MAXIMUM BUILDING COVERAGE (%)	20	<20	<20
MAXIMUM LOT COVERAGE (%)	30	<30	<30

GRAPHIC SCALE

30 0 15 30 60 120

(IN FEET)
1 inch = 30 ft.

LEGEND

- 336 — EXISTING CONTOUR
- 336 — PROPOSED CONTOUR
- APPROXIMATE PROPERTY LINE
- APPROXIMATE SETBACK LINE
- SS — GRAVITY SEWER LINE
- FM — FORCE MAIN
- W — WATER LINE
- OE — OVERHEAD ELECTRIC
- UE — UNDERGROUND ELECTRIC
- ST — STORM DRAINAGE LINE
- SEWER MANHOLE
- POWER POLE
- DECIDUOUS TREE
- CONIFEROUS TREE
- EDGE OF BRUSH/WOODS
- x — FENCE
- DRAINAGE SWALE

SITE ENGINEER:

CIVIL ENGINEERING ASSOCIATES, INC.
10 MANSFIELD VIEW LANE, SOUTH BURLINGTON, VT 05403
802-864-2323 FAX: 802-864-2271 web: www.cea-vt.com

COPYRIGHT © 2008 – ALL RIGHTS RESERVED

DRAWN JSO
CHECKED SAV
APPROVED JSO

OWNER:

JEFFREY T. PAYNE
6328 ETHAN ALLEN HIGHWAY
CHARLOTTE
VERMONT, 05445

PROJECT:

PROPOSED TWO BEDROOM RESIDENCE ADDITION
6328 ETHAN ALLEN HIGHWAY
CHARLOTTE
VERMONT, 05445

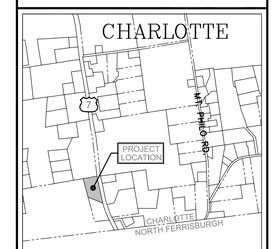

LOCATION MAP
1" = 2000'

DATE	CHECKED	REVISION

PROPOSED SITE PLAN

DATE OCT., 2008
SCALE 1" = 30'
PROJ. NO. 08222
DRAWING NUMBER C1.0

P:\AutoCADD Projects\2008\08222\08222.dwg, 11/3/2008 2:41:41 PM, jolesky

DESIGN DATA FOR ALTERATION TO EXISTING SYSTEM

Design Data Flow:
- Existing Flow
  - 450 gpd for 3 bedroom house per permit
- Proposed Flow
  - Existing 3 bedroom house
    - 3 @ 140 gpd = 420 gpd
  - Add additional 1 bedroom to existing house
    - 1 @ 70 gpd = 70 gpd
  - Proposed 2 bedroom house
    - 2 @ 140 gpd = 280 gpd
  - Total Design Flow
    - 420 gpd + 70 gpd + 280 gpd = 770 gpd

Septic Tank Size:
- Retain existing 1,000 gal septic tank
- Confirm size and condition prior to use

Application Rate:
- Infiltration rate (per previous design) = 30 min./in.
  - Infiltration rate confirmed with additional perc tests
- Standard loading rate = 3/(/30) = 0.55 gal/sq ft
- Modified loading rate (through use of filtrate effluent) = 1.1 gal/sq ft

Absorption Trench Area:
- Existing trench area
  - Per previous design and plan
  - 3 trenches @ 4 ft @ 70 ft = 840 sq ft
- Required trench area
  - 770 gpd @ 1.1 gal/sq ft = ±703 sq ft
- 840 sq ft provided > 703 sq ft required

Desktop Mounding Analysis:
- Ave. Slope = 12%
- Soil Condition = Fine Sandy Loam
- f = 18.7
- h = (34–18)–6 = 10" = 0.83'
- LLR = 18.7*0.83 = ±15.6 gpd/lf
- Length = 770 gpd / 15.6 gpd/lf = ±50 lf required
- Existing Length = 70 lf provided

TEST PIT RESULTS

DATE: 9/15/08
PERFORMED BY: JEFFREY OLESKY
WITNESSED BY: SPENCER HARRIS

TEST PIT #1

0–6" DARK BROWN SANDY LOAM TOPSOIL
6–30" RED BROWN SANDY LOAM W/ STONES
30–48" GREY BROWN FINE SANDY LOAM W/ STONES MOTTLED @ 35"

TEST PIT #2

0–6" DARK BROWN SANDY LOAM TOPSOIL
6–34" RED BROWN SANDY LOAM W/ STONES
34–56" MEDIUM BROWN FINE SANDY LOAM W/ STONES MOTTLED @ 36"

TEST PIT #3

0–7" DARK BROWN SANDY LOAM TOPSOIL
7–31" RED BROWN SANDY LOAM W/ STONES
31–60" MEDIUM BROWN FINE SANDY LOAM W/ STONES MOTTLED @ 34"

TEST PIT #4

0–6" DARK BROWN SANDY LOAM TOPSOIL
6–35" RED BROWN SANDY LOAM W/ STONES
35–61" GREY BROWN FINE SANDY LOAM W/ STONES MOTTLED @ 36"

TEST PIT #5

0–8" DARK BROWN SANDY LOAM TOPSOIL
8–36" RED BROWN SANDY LOAM W/ STONES
36–60" MEDIUM BROWN FINE SANDY LOAM W/ STONES MOTTLED @ 38"

TEST PIT #6

0–6" DARK BROWN SANDY LOAM TOPSOIL
6–34" RED BROWN SANDY LOAM W/ STONES
34–60" MEDIUM BROWN FINE SANDY LOAM W/ STONES MOTTLED @ 35"

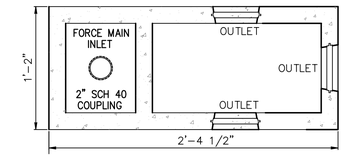

TOP VIEW

*4" LOW PRESSURE SEAL TYPICAL AT ALL OPENINGS EXCEPT FORCE MAIN INLET

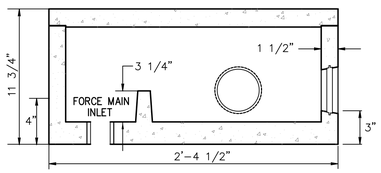

SECTION

DISTRIBUTION BOX

(FM INLET, 3 OUTLET) N.T.S.

NOTES:

1. Distribution box only to be replaced if damaged, in poor condition are not functioning properly. Confirm condition prior to construction.

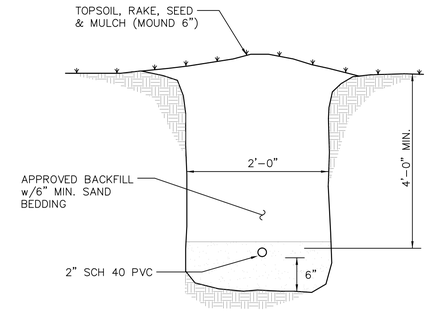

FM TRENCH SECTION

N.T.S.

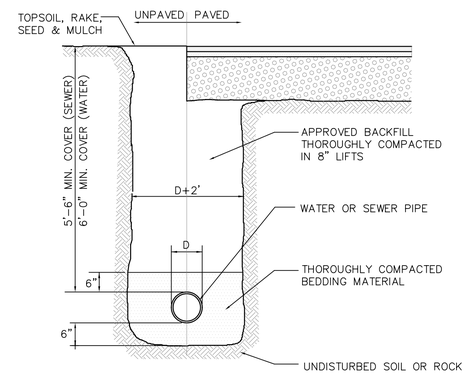

TYPICAL TRENCH DETAIL

N.T.S.

NOTES:

1. Compaction of backfill and bedding shall be a minimum of 90% (95% under roadway surfaces) of maximum dry density determined in the standard proctor test (ASTM D698).
2. Bedding material shall not be placed on frozen subgrade.
3. Approved backfill shall not contain any stones more than 12" in largest dimension (6" in roadways, 2" maximum diameter within 2' of the outside of the pipe), or contain any frozen, wet, or organic material.
4. Trenches shall be completely dewatered prior to placing of pipe bedding material and kept dewatered during installation of pipe and backfill.
5. In trenches with unstable materials, trench bottom shall first be stabilized by placement of filter fabric then crushed stone (3/4" maximum).
6. The sides of trenches 4' or more in depth entered by personnel shall be sheeted or sloped to the angle of repose as defined by O.S.H.A. standards.
7. Bedding material shall consist of crushed stone, gravel or sand with a maximum size of 3/4". Submit a sample to the Engineer for approval.

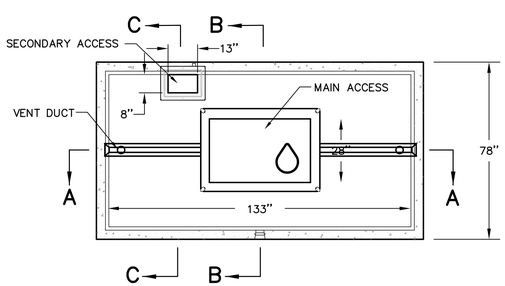

TOP VIEW

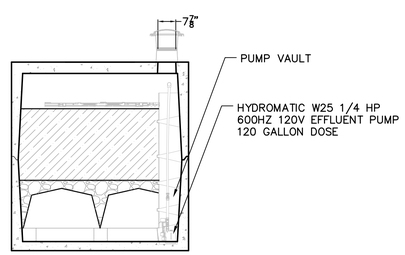

SECTION C–C

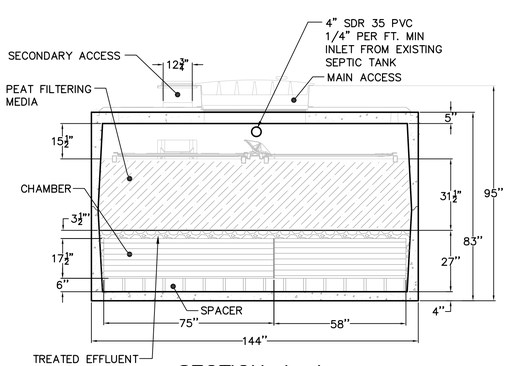

SECTION A–A

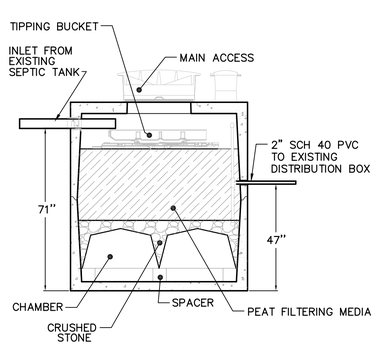

SECTION B–B

ECOFLO © STB–650–BR BIOFILTER–PUMPSTATION

N.T.S.

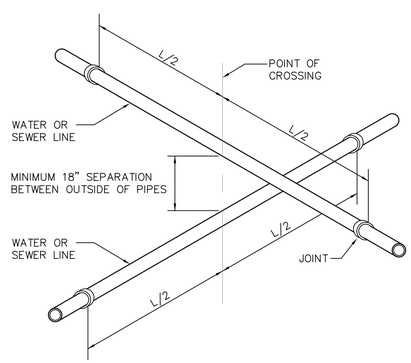

NOTES:

1. AT CROSSINGS, ONE FULL LENGTH OF WATER/SEWER PIPE SHALL BE LOCATED SO BOTH JOINTS WILL BE AS FAR FROM THE WATER/SEWER AS POSSIBLE.
2. IF THE SEWER MAIN IS OVER THE WATER MAIN, THE FIRST SEWER PIPE JOINTS ON EACH SIDE OF THE WATER MAIN MUST BE CONCRETE ENCASED. SPECIAL STRUCTURAL SUPPORT FOR THE WATER AND SEWER PIPES MAY BE REQUIRED.
3. WHERE IT IS IMPOSSIBLE TO MAINTAIN THE 18" SEPARATION, THE SEWER MATERIALS SHALL BE WATER MAIN PIPE OR EQUIVALENT AND SHALL BE PRESSURE TESTED TO WATER MAIN STANDARDS.
4. WATER MAINS AND SEWER LINES OR MANHOLES SHALL HAVE AT LEAST 10' HORIZONTAL SEPARATION. THIS DISTANCE SHALL BE MEASURED EDGE TO EDGE.

WATER/SEWER CROSSING DETAIL

N.T.S.

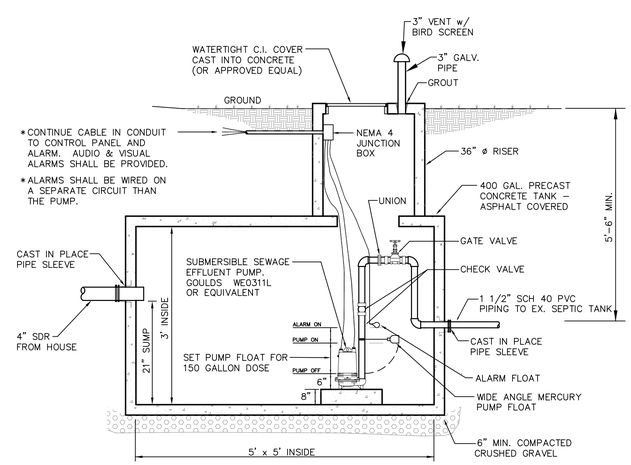

400 GALLON PUMP STATION

N.T.S.

SITE ENGINEER:

CIVIL ENGINEERING ASSOCIATES, INC.
10 MANSFIELD VIEW LANE, SOUTH BURLINGTON, VT 05403
802-864-2323 FAX: 802-864-2271 web: www.cea-vt.com

COPYRIGHT © 2008 – ALL RIGHTS RESERVED

DRAWN JSO
CHECKED SAV
APPROVED JSO

OWNER:

JEFFREY T. PAYNE
6328 ETHAN ALLEN HIGHWAY
CHARLOTTE
VERMONT, 05445

PROJECT:

PROPOSED TWO BEDROOM RESIDENCE ADDITION
6328 ETHAN ALLEN HIGHWAY
CHARLOTTE
VERMONT, 05445

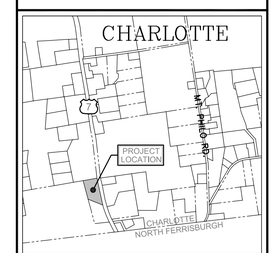

LOCATION MAP
1" = 2000'

DATE	CHECKED	REVISION

PROPOSED SITE DETAILS

DATE OCT., 2008
SCALE AS SHOWN
PROJ. NO. 08222
DRAWING NUMBER C2.0

P:\AutoCADD Projects\2008\08222\08222.dwg, 11/3/2008 2:42:36 PM, jolesky