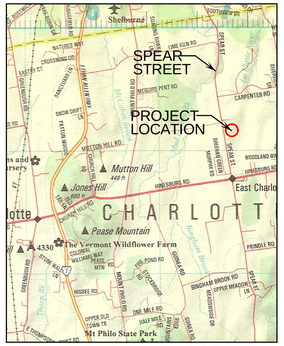


Project Location Map
Not to Scale

DRILLED WELL REQUIRED MINIMUM ISOLATION DISTANCES

1. THESE DISTANCES APPLY TO DRILLED WELLS SERVING A SINGLE-FAMILY RESIDENCE, WITH A MAXIMUM DAILY DEMAND OF LESS THAN 1.9 GPM.

2. WELL LOCATION AND CONSTRUCTION MUST COMPLY WITH THE STATE OF VERMONT, AGENCY OF NATURAL RESOURCES, WATER SUPPLY RULE, CHAPTER 21.

| POTENTIAL SOURCE OF CONTAMINATION | SEPARATION DISTANCE |
|---|---|
| SEWAGE DISPOSAL FIELD WITH FLOWS <2000 GPD | 200 FEET IF WELL IS DOWNSLOPE<br>100 FEET IF WELL IS UPSLOPE |
| SUBSURFACE WASTEWATER PIPING | 50 FEET |
| EDGE OF ROADWAY OR PARKING LOT | 25 FEET |
| EDGE OF RESIDENTIAL DRIVE SERVING 3 RESIDENCES OR LESS | 15 FEET |
| PROPERTY LINE | 10 FEET<br>(50 FEET IF ADJACENT TO CROPLAND) |
| BUILDINGS | 10 FEET |
| LIMIT OF HERBICIDE APPLICATION ON UTILITY RIGHT-OF-WAY | 200 FEET |
| SURFACE WATER | 10 FEET |
| CONCENTRATED LIVESTOCK HOLDING AREAS AND MANURE STORAGE | 200 FEET |
| HAZARDOUS OR SOLID WASTE DISPOSAL SITE | CONTACT DESIGNER |
| NON-SEWAGE WASTEWATER DISPOSAL FIELDS | CONTACT DESIGNER |

LEGEND

- Boundary Line/ROW
- Edge of Road (surface labeled)
- Edge of Drive (surface labeled)
- 70 — 1 Foot Ground Surface Contour
- 70 — Finish Grade
- Gravity Sewer
- 1-Inch Diameter Polyethylene Plastic Water Line
- Well Isolation
- Building Envelope
- SF — Silt Fence
- Proposed Open Space Set Aside
- Tree Line
- Utility Pole
- Traverse Station
- TBM — Temporary Bench Mark (type and elevation noted)
- Test Pit (TP-01)
- Percolation Test (PT-01)
- Hand Auger Soil Boring (SB-1)

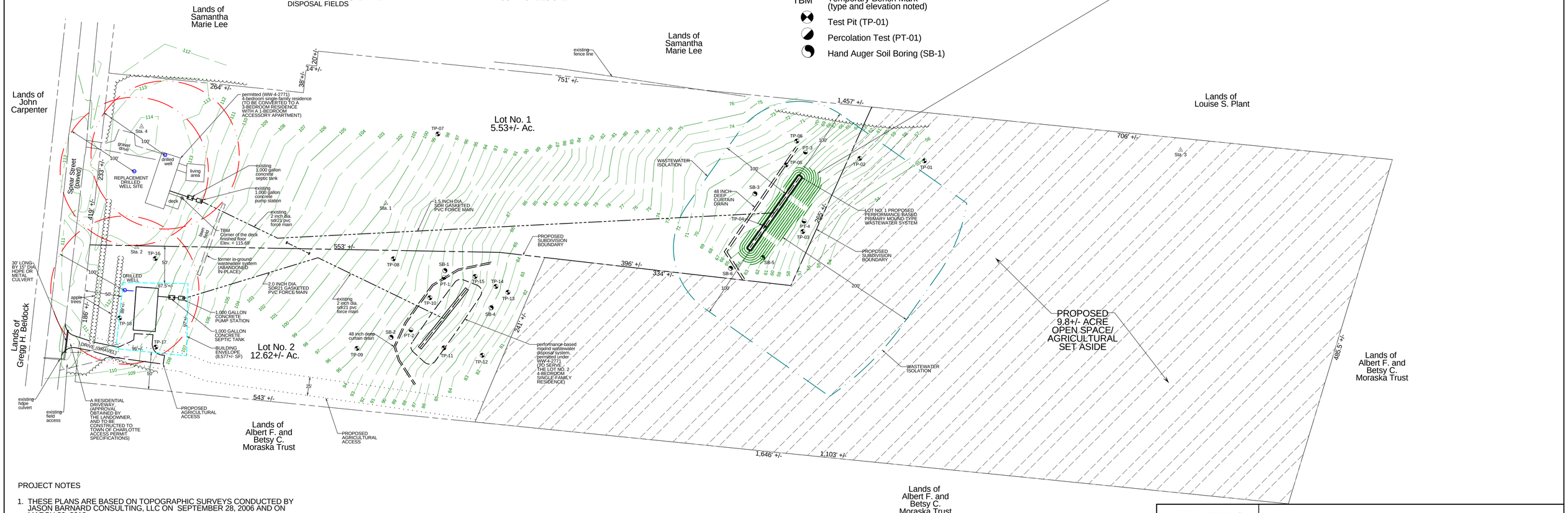


PROJECT NOTES

1. THESE PLANS ARE BASED ON TOPOGRAPHIC SURVEYS CONDUCTED BY JASON BARNARD CONSULTING, LLC ON SEPTEMBER 28, 2006 AND ON MARCH 30, 2012.
2. ELEVATIONS ARE BASED ON AN ASSUMED ELEVATION OF 100.00' AT STATION NO. 1.
3. THIS IS NOT A BOUNDARY SURVEY.
4. FOR CLARITY, TEXT NOTING EXISTING ITEMS ARE IN LOWER CASE, AND TEXT NOTING PROPOSED ITEMS ARE IN UPPER CASE.
5. THE PROPERTY BOUNDARIES ARE BASED ON A NORTHERN LAND SURVEYING, LLC SURVEY PLAT. NO WARRANTY IS MADE TO WITH REGARDS TO THE ACCURACY OF THE BOUNDARY LINES SHOWN HEREON.
6. THE LOT NO. 2 PRIMARY MOUND WASTEWATER DISPOSAL SYSTEM IS DESIGNED IN ACCORDANCE WITH THE STATE OF VERMONT, AGENCY OF NATURAL RESOURCES, ENVIRONMENTAL PROTECTION RULES, CHAPTER 1, "WASTEWATER SYSTEM AND POTABLE WATER SUPPLY RULES". THE LOT NO. 2 MOUND SYSTEM WAS PERMITTED UNDER WW-4-2771 AND WAS CONSTRUCTED IN NOVEMBER 2010.
7. THE LOT NO. 1 PRIMARY MOUND WASTEWATER DISPOSAL SYSTEM IS DESIGNED IN ACCORDANCE WITH THE STATE OF VERMONT, AGENCY OF NATURAL RESOURCES, ENVIRONMENTAL PROTECTION RULES, CHAPTER 1, "WASTEWATER SYSTEM AND POTABLE WATER SUPPLY RULES" EFFECTIVE SEPTEMBER 29, 2007.
8. THE TWO-LOT SUBDIVISION IS PROPOSED AS A PLANNED RESIDENTIAL DEVELOPMENT IN ACCORDANCE WITH THE TOWN OF CHARLOTTE LAND USE REGULATIONS.
9. THE DESIGNER IS NOT RESPONSIBLE FOR THE LAYOUT OF THE PROPOSED SINGLE-FAMILY RESIDENTIAL STRUCTURE AND/OR ANY OTHER BUILDINGS ASSOCIATED WITH THE PROJECT. THE PROPOSED RESIDENTIAL STRUCTURE IS SHOWN BASED ON INFORMATION PROVIDED BY THE LANDOWNER AND THE APPROPRIATE ZONING SETBACKS SHOULD BE REVIEWED BY THE LANDOWNER PRIOR TO THE CONSTRUCTION OF THE RESIDENTIAL STRUCTURE.

Graphic Scale: 1 inch = 60 feet
60 0 30 60 120

PERMITTING

TITLE:

OVERALL SUBDIVISION PLAN

SIGNATURE:

STATE OF VERMONT — JASON S. BARNARD NO. 430-B — LICENSED DESIGNER

JASON S. BARNARD
LICENSED DESIGNER #430-B

Jason Barnard Consulting, LLC
4400 VT Route 17
Starksboro, VT 05487
Telephone: (802) 453-2597
Fax number: (802) 453-8497
E-mail: jbsitetech@hotmail.com

KATHLEEN O'BRIEN
PLANNED RESIDENTIAL DEVELOPMENT
TWO-LOT SUBDIVISION
1971 SPEAR STREET,
CHARLOTTE, VERMONT

DATE: APRIL 10, 2012

REVISIONS:

SCALE: 1" = 60'

DRAWN BY: JB

DRAWING NO. 1

SHEET 1 OF 3

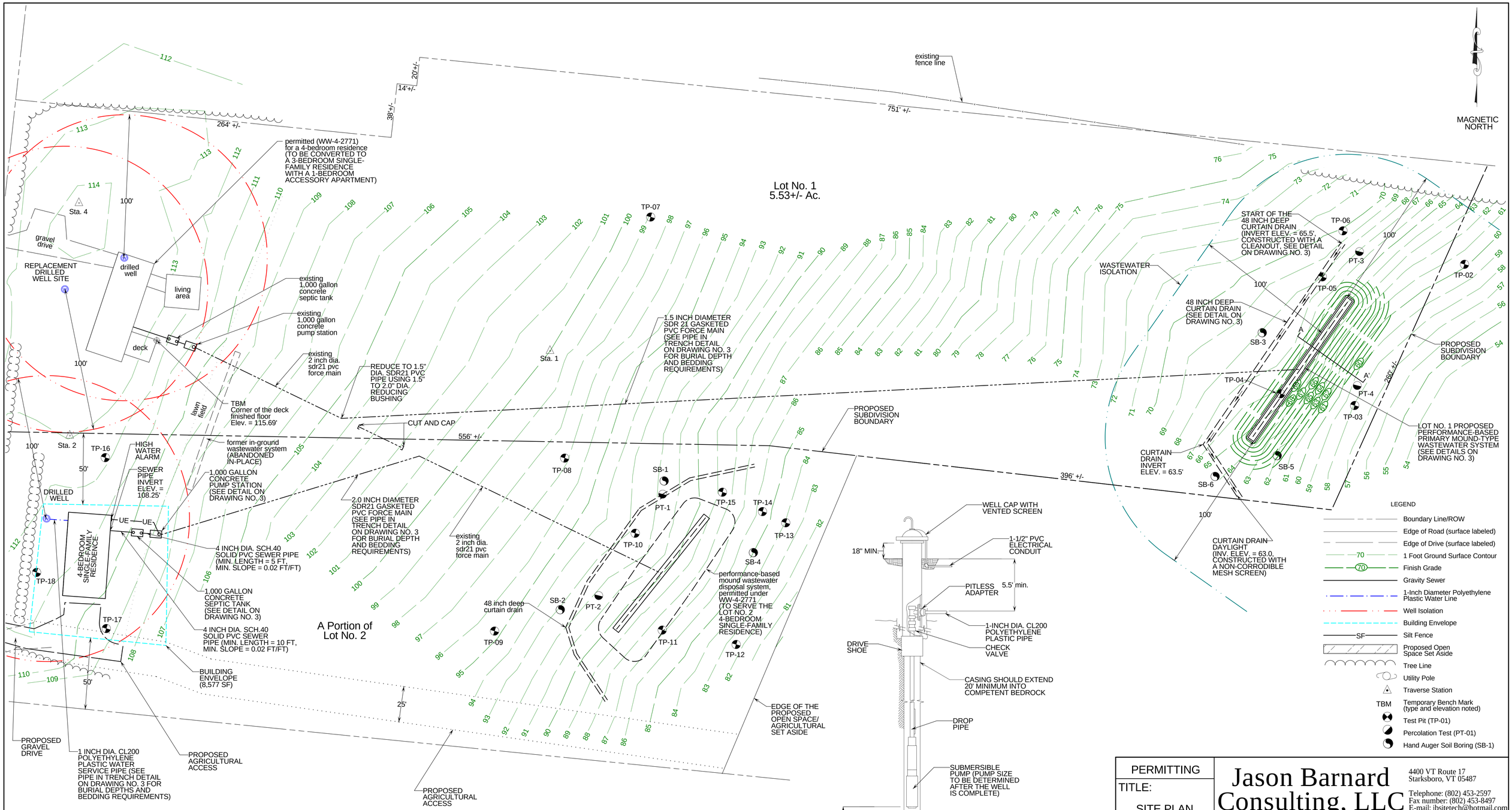


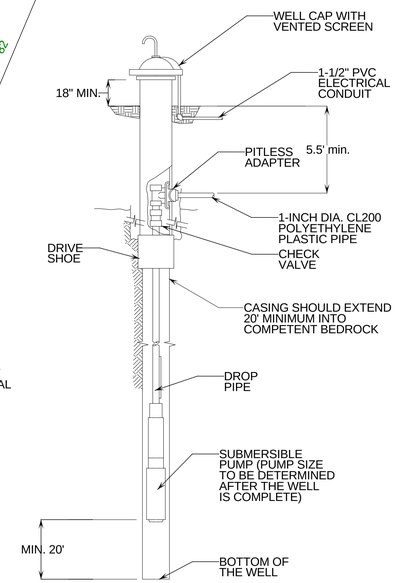


NOTES:

1. THE DRILLED WELL SHALL BE CONSTRUCTED IN ACCORDANCE WITH APPENDIX A PART 12 OF THE VERMONT WATER SUPPLY RULE.
2. THE DRILLED WELL LOCATION SHALL ADHERE TO THE ISOLATION DISTANCES SHOWN ON THE DRILLED WELL ISOLATION TABLE ON DRAWING NO. 1.

## LOT NO. 2 DRILLED WELL CONSTRUCTION DETAIL

NOT TO SCALE

PERMITTING

TITLE: SITE PLAN AND DRILLED WELL DETAIL

SIGNATURE:

STATE OF VERMONT
JASON S. BARNARD
NO. 430-B
LICENSED DESIGNER

JASON S. BARNARD
LICENSED DESIGNER #430-B


Jason Barnard Consulting, LLC
4400 VT Route 17
Starksboro, VT 05487
Telephone: (802) 453-2597
Fax number: (802) 453-8497
E-mail: jbsitetech@hotmail.com


KATHLEEN O'BRIEN
PLANNED RESIDENTIAL DEVELOPMENT
TWO-LOT SUBDIVISION
1971 SPEAR STREET,
CHARLOTTE, VERMONT

DATE: APRIL 10, 2012

SCALE: 1" = 30'

DRAWN BY: JB

REVISIONS:

DRAWING NO. 2

SHEET 2 OF 3

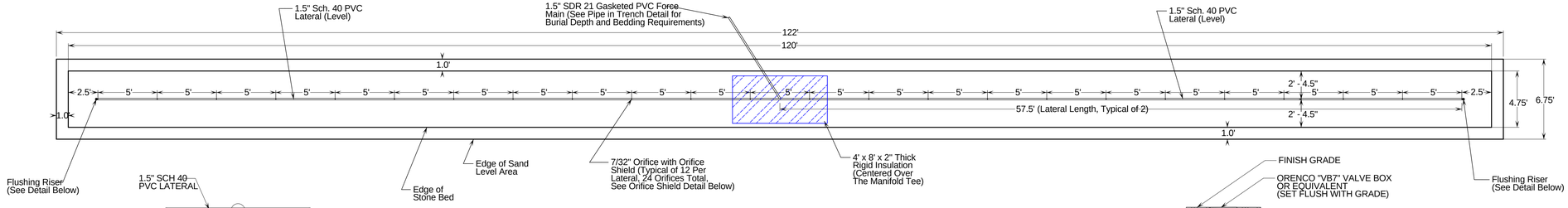


## LOT NO. 1 MOUND WASTEWATER DISPOSAL SYSTEM ABSORPTION BED PLAN VIEW DETAIL

SCALE: 1 INCH = 5 FEET

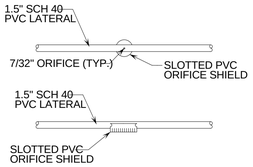


## ORIFICE SHIELD DETAIL

NOT TO SCALE

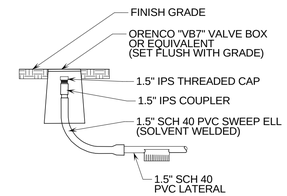


## FLUSHING RISER DETAIL

NOT TO SCALE

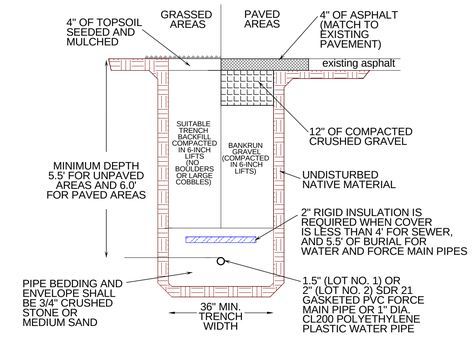


## PIPE IN TRENCH DETAIL

NOT TO SCALE

A

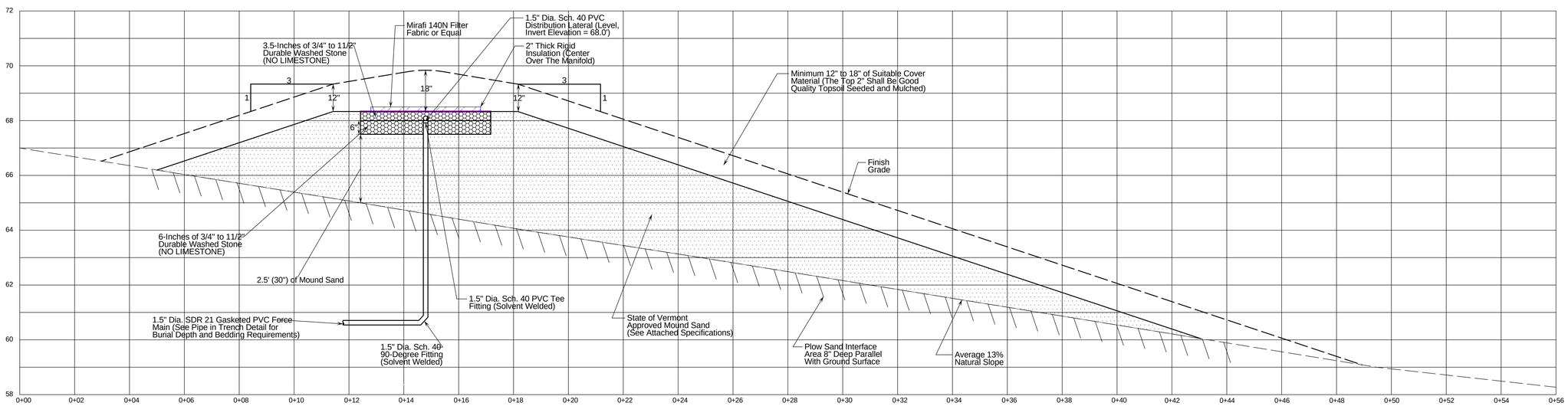


## LOT NO. 1 MOUND WASTEWATER DISPOSAL SYSTEM SECTION

VERTICAL SCALE: 1 INCH = 2 FEET
HORIZONTAL SCALE: 1 INCH = 2 FEET

A'

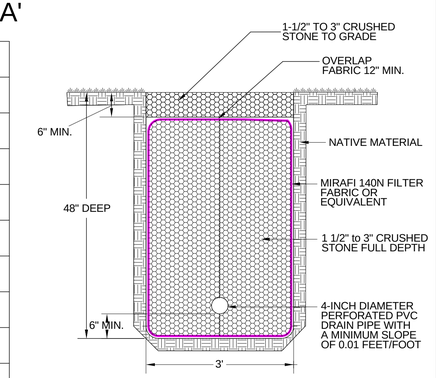


## CURTAIN DRAIN DETAIL

NOT TO SCALE

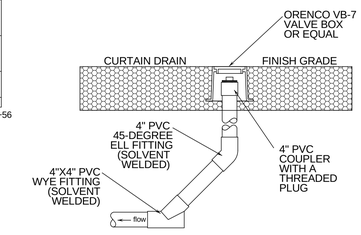


SECTION

NOTES:

1. A CLEANOUT IS REQUIRED AT THE START OF THE CURTAIN DRAIN.
2. CLEANOUTS SHALL BE COMPLETED FLUSH WITH FINISH GRADE.
3. THE CONTRACTOR IS RESPONSIBLE FOR COLLECTING TIES TO THE CLEANOUT.

## CURTAIN DRAIN CLEANOUT DETAIL

NOT TO SCALE

## WASTEWATER DISPOSAL SYSTEM CONSTRUCTION AND MAINTENANCE NOTES

1. THE WASTEWATER DISPOSAL SYSTEM SHALL BE CONSTRUCTED IN ACCORDANCE WITH THE STATE OF VERMONT, AGENCY OF NATURAL RESOURCES, ENVIRONMENTAL PROTECTION RULES, CHAPTER 1, WASTEWATER SYSTEM AND POTABLE WATER SUPPLY RULES.
2. WASTEWATER DISPOSAL SYSTEM LOCATION SHALL BE STAKED OUT BY THE DESIGNER PRIOR TO START OF CONSTRUCTION.
3. ATTACHED MOUND SYSTEM CONSTRUCTION INSTRUCTIONS SHALL BE FOLLOWED DURING THE INSTALLATION OF THE LOT NO. 1 MOUND WASTEWATER DISPOSAL SYSTEM.
4. THE DESIGNER SHALL BE NOTIFIED AT LEAST 48 HOURS IN ADVANCE FOR INSPECTIONS OF THE SEPTIC TANK, PUMP STATION, PLOWED LAYER, AND PLACEMENT OF THE MOUND SAND.
5. THE DESIGNER SHALL BE NOTIFIED AT LEAST 48 HOURS IN ADVANCE FOR A FLOW TEST OF THE MOUND SYSTEM'S PRESSURE DISTRIBUTION NETWORK.
6. WASTEWATER SYSTEM FINISH GRADES WILL VARY WITH NATURAL TOPOGRAPHY. PRIORITY IS TO MAINTAIN 3 ON 1 MOUND FRONT, SIDE AND UPHILL TOE SLOPES.
7. SEPTIC TANK EFFLUENT FILTER SHOULD BE REMOVED AND RINSED BACK INTO THE SEPTIC TANK ANNUALLY.
8. THE SEPTIC TANK SHOULD BE PUMPED OUT EVERY 3 YEARS.
9. FOLLOWING THE MOUND WASTEWATER SYSTEM INSTALLATION, FINISH GRADE SHALL BE SEEDED WITH A CONSERVATION GRASS SEED MIX AND MULCHED.
10. WATER SOFTENER BACKWASH, SEPTIC TANK ADDITIVES, GREASE OR SANITIZERS SHALL NOT BE INTRODUCED INTO THE WASTEWATER DISPOSAL SYSTEM
11. ONCE THE LOT NO. 2 PUMP STATION AND NEW FORCE MAIN ARE CONNECTED TO THE EXISTING MOUND SYSTEM, A FLOW TEST OF THE EXISTING MOUND SYSTEM SHALL BE PERFORMED USING THE FLUSHING RISERS ASSOCIATED WITH THE MOUND SYSTEM. THE FLOW TEST SHALL BE PERFORMED BY THE CONTRACTOR AND WITNESSED BY THE DESIGNER.

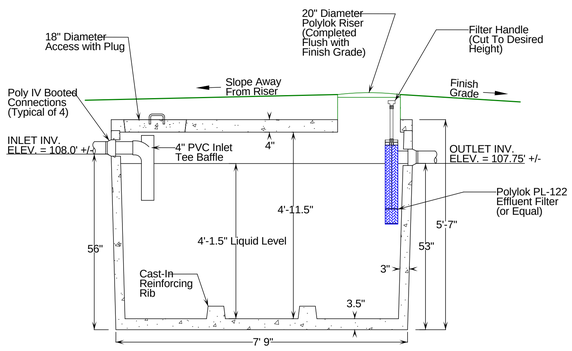


NOTES:

1. SEPTIC TANK SHALL BE SET LEVEL ON A MINIMUM OF SIX INCHES OF COMPACTED GRANULAR BASE.
2. AN INLET TEE BAFFLE IS REQUIRED.
3. IF WATER-PROOF BOOTED CONNECTIONS ARE NOT USED, ALL PIPE PENETRATIONS SHALL BE SEALED WITH A "WATER PLUG" NON-SHRINK HYDRAULIC CEMENT.
4. EFFLUENT FILTER ACCESS SHALL BE COMPLETED FLUSH WITH FINISH GRADE.

## 1,000-GALLON TOP SEAM CONCRETE SEPTIC TANK (LOT NO. 2)

NOT TO SCALE

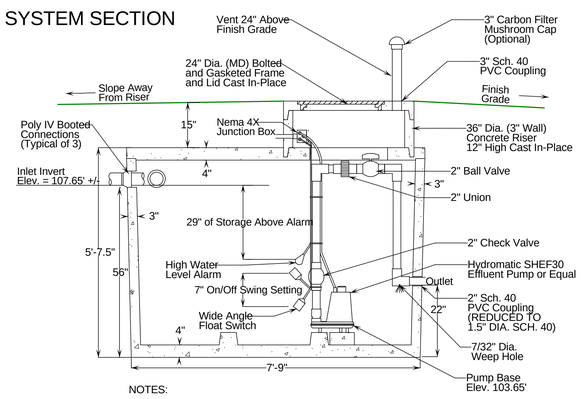


NOTES:

1. PUMP STATION SHALL BE SET LEVEL ON A MINIMUM OF 6-INCHES OF COMPACTED GRANULAR BASE.
2. PUMP STATION SECTIONS SHALL HAVE BUTYL RUBBER JOINT SEALER.
3. IF WATER-PROOF BOOTED PIPE CONNECTIONS ARE NOT USED, PIPE PENETRATIONS SHALL BE SEALED WITH "WATER PLUG" NON-SHRINK HYDRAULIC CEMENT.
4. ON/OFF FLOAT SWITCH TO BE SET WITH A 7.0 INCH SWING SETTING TO PROVIDE A 150 GALLON DOSE VOLUME.
5. HIGH WATER LEVEL ALARM AND PUMP STATION SHALL BE WIRED BY A LICENSED ELECTRICIAN.
6. THE HIGH WATER ALARM SHALL BE MOUNTED AT A VISIBLE LOCATION.

## 1,000-GALLON TOP SEAM CONCRETE PUMP STATION (LOT NO. 2)

NOT TO SCALE

PERMITTING

TITLE:

WASTEWATER SYSTEM DETAILS AND NOTES

SIGNATURE:

STATE OF VERMONT — JASON S. BARNARD NO. 430-B — LICENSED DESIGNER

JASON S. BARNARD
LICENSED DESIGNER #430-B


Jason Barnard Consulting, LLC
4400 VT Route 17
Starksboro, VT 05487
Telephone: (802) 453-2597
Fax number: (802) 453-8497
E-mail: jbsitetech@hotmail.com


KATHLEEN O'BRIEN
PLANNED RESIDENTIAL DEVELOPMENT
TWO-LOT SUBDIVISION
1971 SPEAR STREET,
CHARLOTTE, VERMONT

DATE: APRIL 10, 2012

SCALE: AS NOTED

DRAWN BY: JB

REVISIONS:

DRAWING NO. 3

SHEET 3 OF 3