GENERAL NOTES

1. Utilities shown do not purport to constitute or represent all utilities located upon or adjacent to the surveyed premises. Existing utility locations are approximate only. The Contractor shall field verify all utility conflicts. All discrepancies shall be reported to the Engineer. The Contractor shall contact Dig Safe (888–344–7233) prior to any construction.
2. The purpose of this plan is to depict the proposed locations of the wastewater site, house footprint, and new well.
3. This plan is not a boundary survey and is not intended to be used as one.
4. Property line information is approximate and based on the Town of Charlotte's and the Town of Hinesburg's tax maps.

LEGEND

- PROPERTY LINE
- TP — TEST PIT
- PT — PERCOLATION TEST
- EDGE OF BRUSH/WOODS
- DRAINAGE SWALE
- 336 — EXISTING CONTOUR
- DECIDUOUS TREE
- STONE WALL
- TEMPORARY BENCHMARK
- IRON PIN FOUND
- W — DRILLED WELL
- POWER POLE
- W — WATER LINE
- FM — FORCE MAIN
- SS — SEWER LINE

DRILLED WELL MINIMUM ISOLATION DISTANCES

(Contact Engineer for any Clarifications or Conflicts)

Potential Source of Contamination and other Siting Limitations	Separation Distance
Roadway, Parking Lot (outer edge of shoulder)	25'
Driveway (less than 3 residences)	15'
Sewage System Disposal Fields	a.
Subsurface Wastewater Piping and Related Tanks	50'
Property Line	10'b
Limit of Herbicide Application on Utility R.O.W.	100'c
Surface Water	10'd
Flood ways	e.
Buildings	10'
Concentrated Livestock Holding Area & Manure Storage Systems	200'
Hazardous or Solid Waste Disposal Site	f.
Non–sewage Wastewater Disposal Fields	f.

a. See Table B

b. Increased to 50' when adjacent to agricultural cropland.

c. Applies to rights–of–way (ROW) where herbicides have been applied in the past 12 months or may be applied in the future. This distance may be increased to 200' depending on the active ingredient in the herbicide according to Vermont Regulations for Control of Pesticides.

d. For Public water sources, see Appendix A, part 3, Subpart 3.3.8.

e. Water sources shall not be located in a flood way.

f. If a water source is potentially downgradient of a source of contamination, then the Agency shall apply the criteria in 11.4.2.2.

WASTEWATER SYSTEM MINIMUM ISOLATION DISTANCES

(Contact Engineer for any Clarifications or Conflicts)

	Horizontal Distance (Ft.) Disposal Field	Septic Tank
Drilled Well Serving 1 Home – Up Slope of System	100*(Min.)	50
Drilled Well Serving 1 Home – Down Slope of System	200*(Min.)	––
Service Water Lines	25	25
Roadways, Driveways	10	5
Stream, Watercourse, Lake or Impoundment	50	25
Drainage Swales, Roadway Ditches	25	––
Foundation, Footing Drains	35 (75 Downslope)	10
Replacement Area – Sides	10	––
Replacement Area – Uphill or Downhill	25	––
Property Line – 10' from toe or 25' from edge of disposal system, whichever is greater.		
Property Line – Downgradient Toe	25	––

*Isolation distances to well locations may vary due to site conditions – contact Engineer for verification with the Vermont Water Supply Rule.

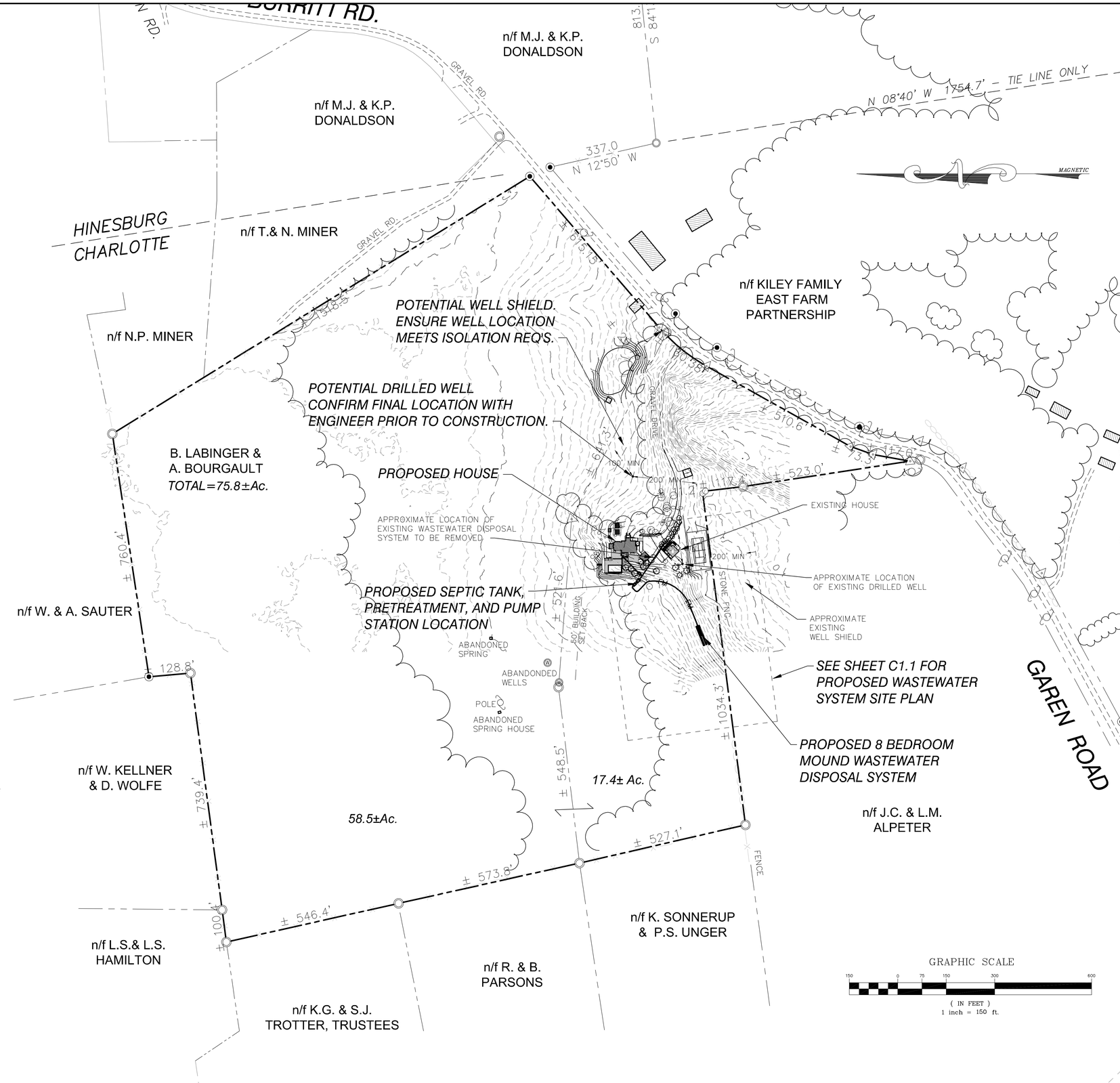

SITE ENGINEER:

CIVIL ENGINEERING ASSOCIATES, INC.
10 Mansfield View Lane South Burlington, VT 05403
802-864-2323 FAX: 802-864-2271 web: www.cea-vt.com

COPYRIGHT © 2010 – ALL RIGHTS RESERVED

DRAWN: JSO/JDL
CHECKED: SAV
APPROVED: JSO

OWNER:

BARRY LABINGER & ADELE BOURGAULT

PROJECT:

PROPOSED WASTEWATER SYSTEM

553 GAREN ROAD
CHARLOTTE, VERMONT

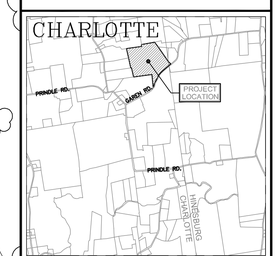

LOCATION MAP
1" = 4000'

DATE	CHECKED	REVISION
11/9/10	JSO	REVISED WW SYSTEM DESIGN
1/17/11	JSO	UPDATED PROP'D SITE IMPROVEMENTS

OVERALL SITE PLAN

DATE: JULY, 2010
SCALE: 1" = 150'
PROJ. NO.: 10218
DRAWING NUMBER: C1.0

GENERAL NOTES

1. Utilities shown do not purport to constitute or represent all utilities located upon or adjacent to the surveyed premises. Existing utility locations are approximate only. The Contractor shall field verify all utility conflicts. All discrepancies shall be reported to the Engineer. The Contractor shall contact Dig Safe (888–344–7233) prior to any construction.

2. All existing utilities not incorporated into the final design shall be removed or abandoned as indicated on the plans or directed by the Engineer.

3. The Contractor shall maintain as–built plans (with ties) for all underground utilities. Those plans shall be submitted to the Owner at the completion of the project.

4. The Contractor shall repair/restore all disturbed areas (on or off the site) as a direct or indirect result of the construction.

5. All grassed areas shall be maintained until full vegetation is established.

6. Maintain all trees outside of construction limits.

7. The Contractor shall be responsible for all work necessary for complete and operable facilities and utilities.

8. The Contractor shall submit shop drawings for all items and materials incorporated into the site work. Work shall not begin on any item until shop drawing approval is granted.

9. In addition to the requirements set in these plans and specifications, the Contractor shall complete the work in accordance with all permit conditions.

10. Any dewatering necessary for the completion of the sitework shall be considered as part of the contract and shall be the Contractor's responsibility.

11. Existing pavement and tree stumps to be removed shallbe disposed of at an approved off–site location. All pavement cuts shall be made with a pavement saw.

12. If there are any conflicts or inconsistencies with the plans or specifications, the Contractor shall contact the Engineer for verification before work continues on the item in question.

13. Property line information is approximate and based on the Town of Charlottes tax maps. This plan is not a boundary survey and is not intended to be used as one.

14. The project benchmarks, of 445.1' and 450.8', are both spikes. Vertical datum based on NAVD88. Horizontal datum based on a magnetic reading taken at the time of the survey.

15. The purpose of this plan is to depict the proposed mound wastewater disposal system that will treat both the proposed 5 bedroom house as well as the existing 3 accessory structure. See proposed site plan by H. Keith Wagner Landscape Architects for proposed site improvements.

TEST PIT RESULTS

DATE: 1/29/07, 6/27/07 & 6/23/10
PERFORMED BY: JSO/SAV

TP #27
0–4" Brown Sandy Loam Topsoil, roots to 18"
4–15" Brown Stony Sandy Loam
15–36" Brown Stony Fine Sandy Loam
Mottled @ 24", Ledge @ 36"

TP #29
0–9" Dark Brown Sandy Loam Topsoil, roots to 24"
9–24" Red Brown Stony Sandy Loam
24–46" Brown Stony Fine Sandy Loam
Mottled @ 28"

TP #107
0–6" Dark Brown Sandy Loam Topsoil, roots to 12"
6–14" Brown Sandy Loam
14–24" Brown Fine Sandy Loam
24–37" Grey Clay Loam
Mottled @ 22"

TP #109
0–5" Dark Brown Sandy Loam Topsoil, roots to 6"
5–15" Brown Fine Sandy Loam
Ledge @ 15"

TP # 111
0–6" Dark Brown Sandy Loam Topsoil, roots to 6"
6–15" Grey Brown Silty Loam
15–40" Grey Brown Clay Loam
Mottled @ 15"

TP #113
0–6" Dark Brown Sandy Loam Topsoil, roots to 14"
6–12" Red Brown Stony Sandy Loam
12–28" Brown Stony Fine Sandy Loam
Ledge @ 28", No Mottling

TP #115
0–6" Dark Brown Sandy Loam Topsoil, roots to 8"
6–18" Red Brown Stony Sandy Loam
18–28" Brown Stony Fine Sandy Loam
28–36" Grey Brown Silty Loam
Mottling @ 24"

TP #28
0–6" Dark Brown Sandy Loam Topsoil, roots to 20"
6–18" Red Brown Stony Sandy Loam
18–48" Brown Stony Fine Sandy Loam
Mottled @ 26"

TP #30
0–6" Dark Brown Sandy Loam Topsoil, roots to 14"
6–20" Brown Sandy Loam
20–36" Brown Fine Sandy Loam
Mottled @ 18", Ledge @ 36"

TP #108
0–6" Dark Brown Sandy Loam Topsoil, roots to 8"
6–20" Dark Brown Fine Sandy Loam
20–28" Brown Stony Silty Loam
28–42" Grey Brown Clay Loam
Mottled @ 20"

TP # 110
0–7" Dark Brown Sandy Loam Topsoil, roots to 6"
7–15" Grey Brown Silty Loam
15–40" Grey Brown Clay Loam
Mottled @ 14"

TP #112
0–6" Dark Brown Sandy Loam Topsoil, roots to 12"
6–18" Brown Sandy Loam
18–24" Brown Fine Sandy Loam
24–36" Grey Clay Loam
Mottled @ 20"

TP #114
0–6" Dark Brown Sandy Loam Topsoil, roots to 12"
6–14" Red Brown Stony Sandy Loam
14–30" Brown Stony Fine Sandy Loam
Ledge @ 30", No Mottling

PERC TEST RESULTS

DATE: 7/13/2010
PERFORMED BY: JCB/GAC

PERC TEST #1 – ±14 MIN./IN.

PERC TEST #2 – ±4 MIN./IN.

DESIGN DATA FOR NEW PRIMARY SYSTEM

Design Data Flow:
- 5 bedrooms
  - 3 @ 140 gpd = 420 gpd
  - 2 @ 70 GPD = 140 gpd
- replacement 3 bedrooms
  - 3 @ 140 gpd = 420 gpd
  - Total Design Flow = 980 gpd

Loading Rate:
- Mound System = 1.0 gal/sf
- Pretreat Effluent = 2.0 gal/sf
- Use 2.0 gal/sf

System Size:
- 980 gpd @ 2.0 gal/s f= 490 sf req.
- 490 sf @ 2 trenches @ 4' wide = 61.25' req.
- Use two 64' long trenches = 512 sf provided

Septic Tank Size:
- Design Flow < 675 gpd
- Use 1,000 gal septic tank each

Pretreatment System:
- Use Advantex AX–20 Series Mode 1–B pretreatment system capable of treating 1000 gpd or approved equal. Confirm system with Engineer prior to construction.

Pump Requirements:
- Twenty–Two 1/4" dia. orifices @ 6' o.c.
  22 orifices @ 1.27 gpm/ori. = 28.1 gpm
- TDH @ 28.1 gpm:
  - Elevation 26 ft
  - Friction 10 ft
  - Residual 3 ft
  - 39 ft
- Use SHEF 50 1/2 Hp submersible effluent pump or approved equal. Confirm pump requirements if final pump station location is different then shown on plans.

Desktop Mounding Analysis:
- Ave. Slope = 12.5%
- Soil Condition = Fine Sandy Loam
- f = 18.7
- SHWT@ 18" Ledge@ 28"
- h = 18–6 = 12" (1')
- LLR = 1' * 18.7 = 18.7 gpd/ft
- Length = 980 gpd / 18.7 gpd/ft = 52.4' (min) Based in LLR
- Design Length = 64' > 52.4', OK

Replacement System:
- Not required due to mound primary system design

LEGEND

- PROPERTY LINE
- TEST PIT
- PERCOLATION TEST
- EDGE OF BRUSH/WOODS
- DRAINAGE SWALE
- EXISTING CONTOUR
- DECIDUOUS TREE
- STONE WALL
- TEMPORARY BENCHMARK
- IRON PIN FOUND
- DRILLED WELL
- POWER POLE
- W — WATER LINE
- FM — FORCE MAIN
- SS — SEWER LINE

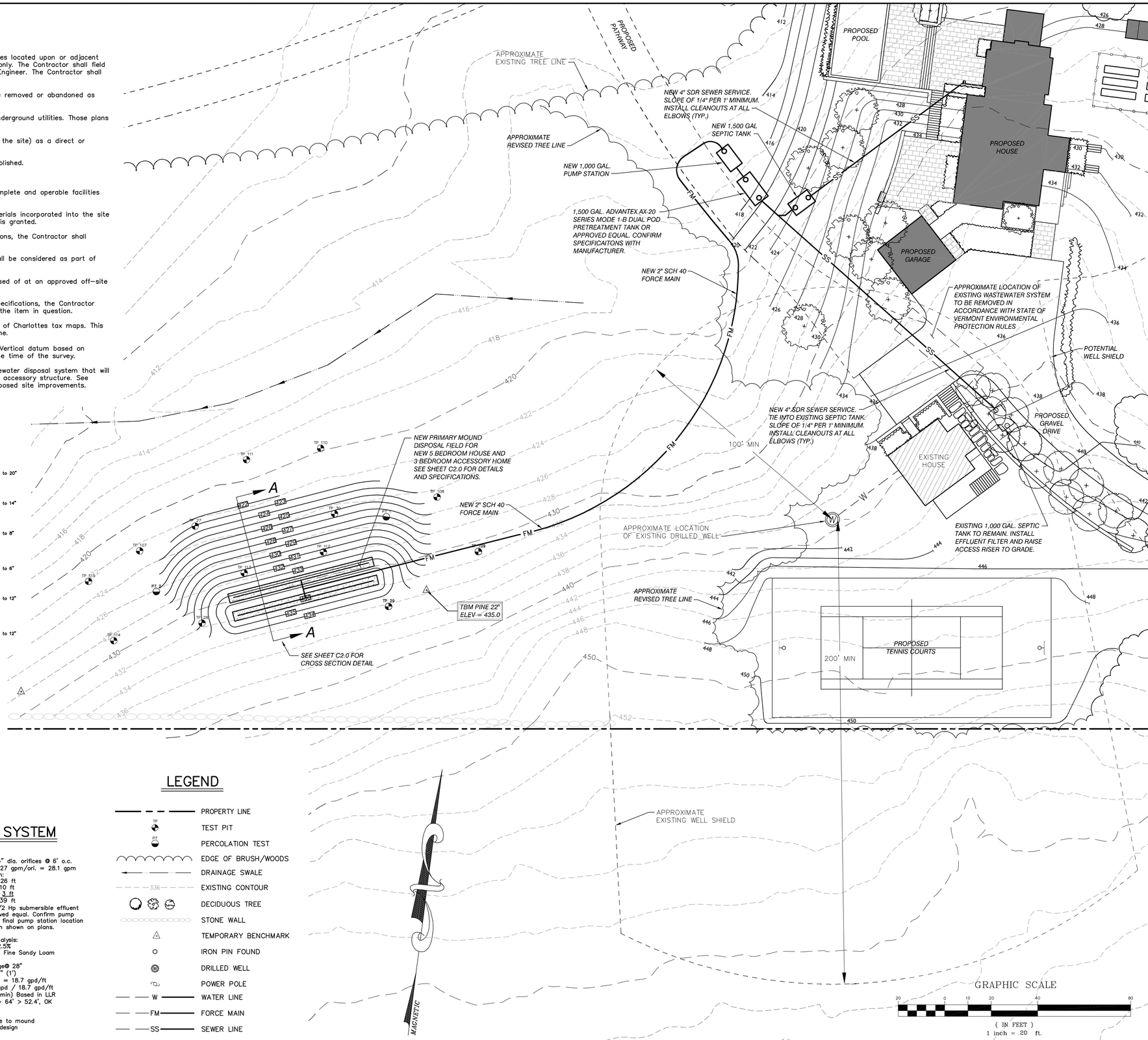

SITE ENGINEER:

CIVIL ENGINEERING ASSOCIATES, INC.
10 Mansfield View Lane South Burlington, VT 05403
802-864-2323 FAX: 802-864-2271 web: www.cea-vt.com

COPYRIGHT © 2010 – ALL RIGHTS RESERVED

DRAWN: JDL
CHECKED: SAV
APPROVED: JSO

OWNER:

BARRY LABINGER & ADELE BOURGAULT

PROJECT:

PROPOSED WASTEWATER SYSTEM

553 GAREN ROAD
CHARLOTTE, VERMONT

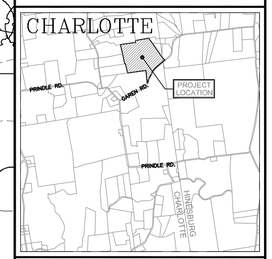

LOCATION MAP
1" = 4000'

DATE	CHECKED	REVISION
11/9/10	JSO	REVISED WW SYSTEM DESIGN
1/17/11	JSO	UPDATED PROP'D SITE IMPROVEMENTS

SITE PLAN

DATE: JULY, 2010
SCALE: 1" = 20'
PROJ. NO.: 10218
DRAWING NUMBER: C1.1

DISPOSAL FIELDS & FORCE MAINS

PART 1 – GENERAL

1.01 Summary

A. Section includes:
   1. Wastewater Disposal Field
   2. Force Main Materials

1.02 References

A. All work shall be done in accordance with the State of Vermont Environmental Protection Rules effective September 29, 2007.

PART 2 – PRODUCTS

2.01 General

A. Disposal Fields: Schedule 40 PVC pipe meeting the requirements of the latest revision of ASTM Specification D–1785. Fittings used in the disposal fields shall be compatible with distribution lines material.

B. Force Mains: PVC pipe shall conform in all respects to the latest revisions of ASTM Specifications D–2241. All pipe fittings shall be SDR 26 (or SCH 40) clearly marked as follows:

– Manufacturer's Name and Trademark
– Nominal Pipe Size (as shown on plans)
– Material Designation

Joints shall be push–on type using elastomeric gaskets factory installed conforming to ASTM Specification D–3212.

C. Crushed stone shall be clean, durable and no smaller than 3/4" or larger than 1 1/2 inches in diameter.

PART 3 – EXECUTION

MOUND CONSTRUCTION

A. Aboveground vegetation shall be closely cut and removed from the ground surface throughout the area to be utilized for the placement of the fill material. Prior to plowing, the dosing pump discharge line from the pump chamber or dosing chamber to the point of connection with the distribution piping header shall be installed. The area shall then be plowed to a depth of seven to eight inches, parallel to the land contour with the plow throwing the soil upslope to provide a proper interface between the fill and natural soils. Tree stumps should be cut flush with the surface of the ground and roots should not be pulled. Once plowing of the mound area is completed, the area shall be fenced to prevent vehicles and equipment from entering the plowed area.

B. To prevent compaction, construction equipment shall not be moved across the plowed surface or the effluent disposal area. However, after placement of a minimum of six inches of sand fill over the plowed area, construction equipment may be driven over the protected surface to expedite construction. Construction equipment shall be kept off the area down gradient of the disposal field. Construction and/or plowing shall not be initiated when the soil moisture content is high.

C. Construction should be initiated immediately after preparation of the soil interface by placing all of the sand fill needed for the mound to a minimum depth of 27 inches. This depth will permit excavation of trenches to accommodate the crushed stone (12 inches) necessary for the distribution piping.

D. The pressure distribution pipe should be laid level on top of the stone and flushing valves installed at the ends of the pipe. Upon completion of the distribution piping, the qualified consultant shall test the system with clean water. The test shall show that a minimum pressure of three feet of head is present at the ends of the pipe and that the difference in discharge rate between the two orifices with the greatest difference in discharge rates is not greater than 15 percent. After connecting the distribution pipe to the force main, the distribution pipe shall be covered with at least two inches of clean stone aggregate. The stone aggregate shall be covered completely with filter fabric.

E. After installation of the distribution system, crown the entire mound with cover of soil less permeable than the mound fill, covering with 12 inches on the side slopes and a minimum of 18 inches over the center of the mound. Native soil from the site is normally suitable for cover material, though the top two to four inches of this cover should be topsoil. The entire mound shall be seeded, sodded or otherwise provided with vegetative cover to assure stability of the installation.

F. The area surrounding the disposal field shall be graded to provide diversion of surface runoff waters if required.

3.02 Testing Notes

A. The wastewater system shall be inspected during critical stages of construction by a qualified consultant. This shall include at a minimum the staking of the disposal field, the trenches after the initial 9 inches of stone and distribution piping is placed, the installation and pressure test of distribution piping, and a final inspection of the entire system. The Contractor will be responsible for contacting the Engineer to set up the inspection schedule.

B. Testing of pressure distribution shall be done in the Engineer's presence. Pressure shall be measured to insure a minimum of 1 psi. (See section D above).

C. The distribution line shall then be carefully placed on the bedding with no slope, orifice shields snapped into place, and covered with at least 2" of crushed stone.

D. All work shall be done in accordance with the State of Vermont Environmental Protection Rules and the Town of Shelburne Sewage Ordinance Standards.

E. Prior to use of the system, the qualified consultant shall submit a written report to the State of Vermont stating that the system has been installed according to the approved plans and permit. The report shall specifically address the inspection of the site preparations and include numerical results of the orifice discharge rate comparison.

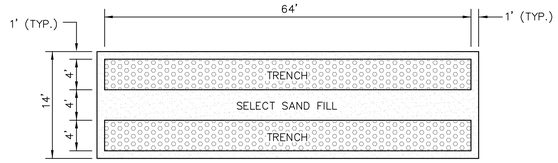

TYPICAL TRENCH PLAN
N.T.S.

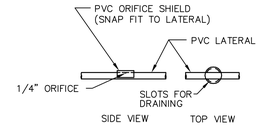

ORIFICE SHIELD DETAIL
N.T.S.

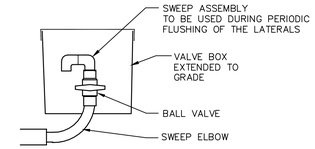

FLUSHING VALVE DETAIL
N.T.S.

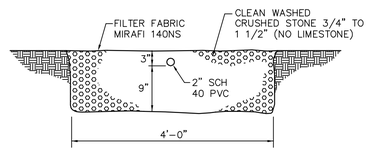

TYPICAL TRENCH SECTION
N.T.S.

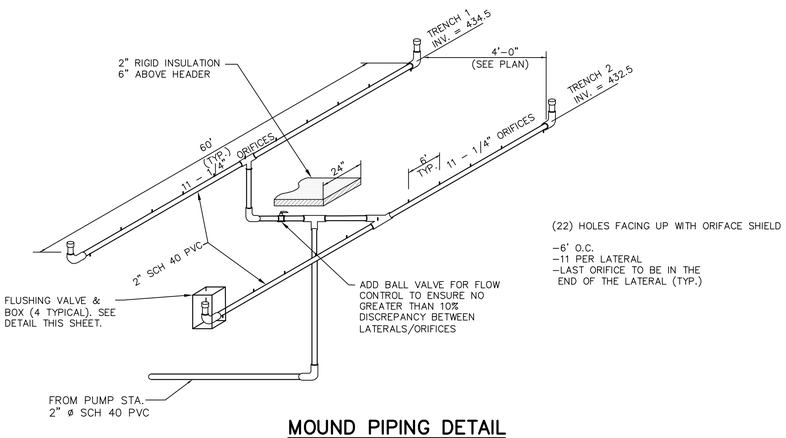

(22) HOLES FACING UP WITH ORIFACE SHIELD

–6' O.C.
–11 PER LATERAL
–LAST ORIFICE TO BE IN THE END OF THE LATERAL (TYP.)

MOUND PIPING DETAIL
N.T.S.

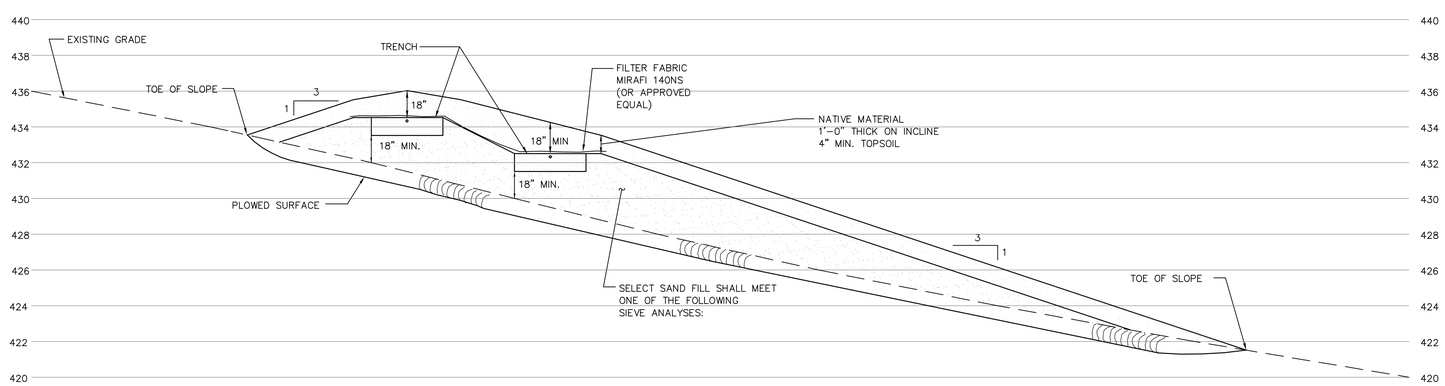

SIEVE #	% PASSING
10	85–100
40	25–75
60	0–30
100	0–10
200	0–5

SIEVE #	% PASSING
8	80–100
16	50–85
30	25–60
50	10–30
100	2–10

SIEVE #	% PASSING
10	85–100
40	30–50
200	0–10

SECTION A–A
1/4" = 1'–0"

SITE ENGINEER:

CIVIL ENGINEERING ASSOCIATES, INC.
10 Mansfield View Lane South Burlington, VT 05403
802-864-2323 FAX: 802-864-2271 web: www.cea-vt.com

COPYRIGHT © 2010 – ALL RIGHTS RESERVED

DRAWN
JDL

CHECKED
SAV

APPROVED
JSO

OWNER:

BARRY LABINGER & ADELE BOURGAULT

PROJECT:

PROPOSED WASTEWATER SYSTEM

553 GAREN ROAD
CHARLOTTE,
VERMONT

LOCATION MAP
1" = 4000'

DATE	CHECKED	REVISION
11/9/10	JSO	REVISED WW SYSTEM DESIGN

WASTEWATER DETAILS

DATE
JULY, 2010

SCALE
AS SHOWN

PROJ. NO.
10218

DRAWING NUMBER
C2.0

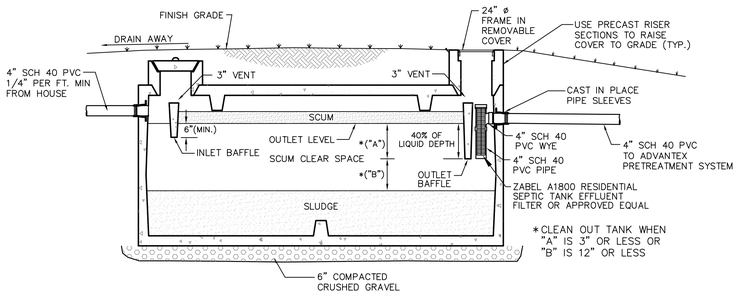

1500 GALLON SEPTIC TANK

N.T.S.

SEPTIC TANK NOTES

1. Septic tank shall be a precast concrete tank, unless otherwise approved.
2. Maintenance
   - At least once a year, the depth of sludge and scum in the septic tank should be measured. The tank should be pumped if:
     - The sludge is closer than twelve inches to the outlet baffle or;
     - The scum layer is closer than three inches to the outlet baffle.
   - Under no circumstances should anyone enter a septic tank.
3. Recommendations
   - The use of garbage grinders is discouraged as sludge accumulation in the septic tank can be increased by up to 40%. If used, the septic tank will require more frequent pumping.
   - The septic system is designed to handle human waste and toilet paper, plus water from plumbing fixtures such as toilets, baths and sinks. Moderate use of household cleaners, detergents and bleach should not damage your system; however, indiscriminate use may cause problems. Non-degradable paper products and any other non-biodegradable substances should not be put in your wastewater system.
   - Minimize the amount of water used in the household. Excessive water could flush solids from the septic tank to the disposal field which leads to clogging or plugging of the piping. When dishwashers and washers are used, make sure loads are full and stagger their use to reduce peak flows, i.e. stagger loads of laundry over several days instead of one day.
4. Walkways, patios and decks or other permanent structures should not be constructed over the septic tank.
5. There should be no need to use commercial "starter", "bacterial feeds", or "cleaners", etc. Bacteria in a septic tank system occurs naturally.

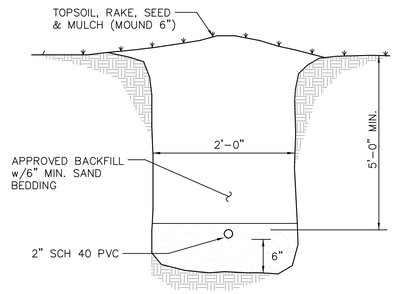

FM TRENCH SECTION

N.T.S.

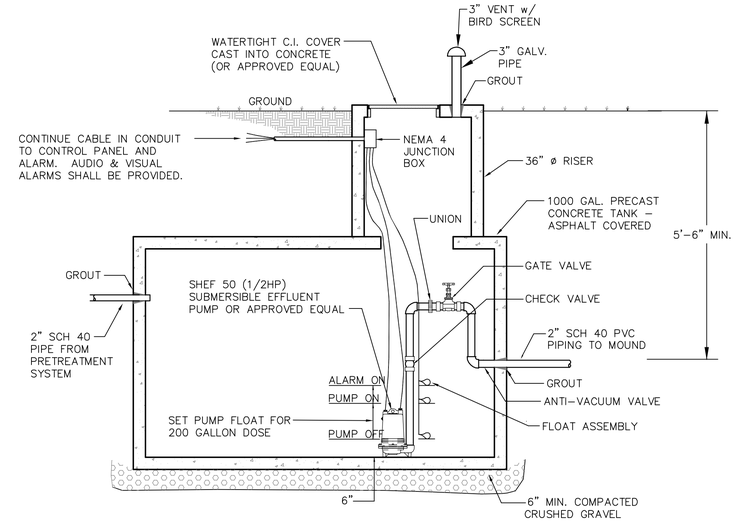

*VERIFY PUMP REQUIREMENTS WITH THE ENGINEER IF FINAL SITE SELECTED IS OTHER THAN SHOWN ON PLAN

1000 GALLON PUMP STATION DETAIL

N.T.S.

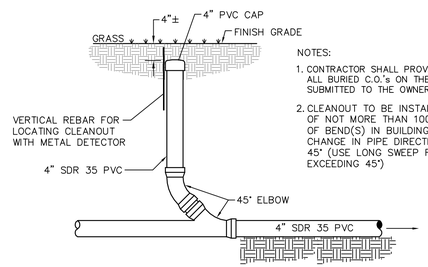

NOTES:

1. CONTRACTOR SHALL PROVIDE TWO TIES TO ALL BURIED C.O.'s ON THE AS-BUILT PLANS SUBMITTED TO THE OWNER.
2. CLEANOUT TO BE INSTALLED AT INTERVALS OF NOT MORE THAN 100 FEET, AND UPSTREAM OF BEND(S) IN BUILDING SEWER(S) WHEN CHANGE IN PIPE DIRECTION EXCEEDS 45° (USE LONG SWEEP FITTINGS WHEN EXCEEDING 45°)

TYPICAL CLEANOUT DETAIL

N.T.S.

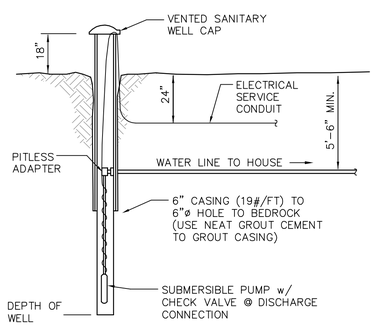

NOTE: THE WELL SHALL BE CONSTRUCTED IN ACCORDANCE WITH THE VERMONT WATER SUPPLY RULE – CHAPTER 21 (PART II SMALL SCALE WATER SUPPLY SYSTEMS)

DRILLED WELL DETAIL

NTS

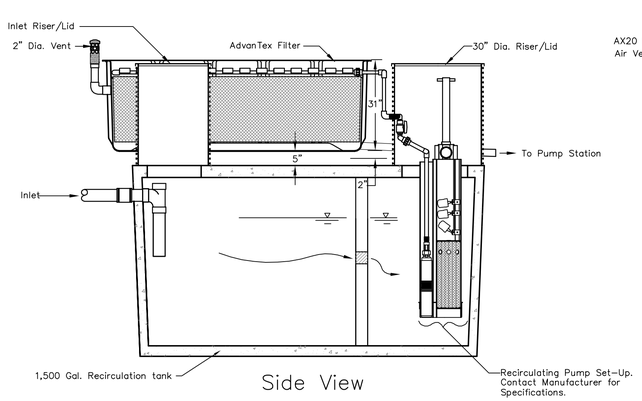

Side View

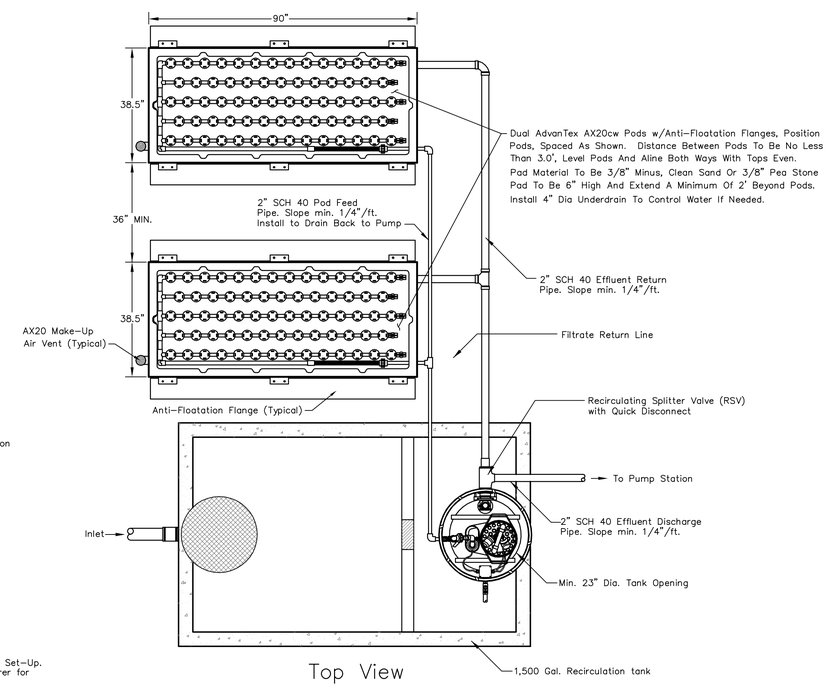

Top View

ADVANTEX™ PRETREATMENT SYSTEM

AX 20 SERIES – MODE 1B N.T.S.

*REFER TO MANUFACTURER SPECIFICATIONS FOR ADDITIONAL INSTALLATION INFORMATION.

SITE ENGINEER:

CIVIL ENGINEERING ASSOCIATES, INC.
10 Mansfield View Lane South Burlington, VT 05403
802-864-2323 FAX: 802-864-2271 web: www.cea-vt.com

COPYRIGHT © 2010 – ALL RIGHTS RESERVED

DRAWN: JDL
CHECKED: SAV
APPROVED: JSO

OWNER:

BARRY LABINGER & ADELE BOURGAULT

PROJECT:

PROPOSED WASTEWATER SYSTEM

553 GAREN ROAD
CHARLOTTE, VERMONT

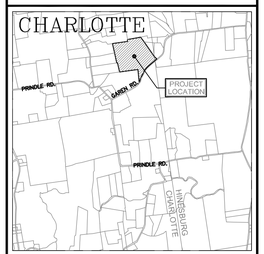

LOCATION MAP

1" = 4000'

DATE	CHECKED	REVISION
11/9/10	JSO	REVISED WW SYSTEM DESIGN

WASTEWATER DETAILS

DATE: JULY, 2010
SCALE: AS SHOWN
PROJ. NO.: 10218
DRAWING NUMBER: C2.1