Setbacks:

The following are general setback distances that must be met unless otherwise authorized by the permitting authority and/or the consultant. This list does not necessarily include all required setback distances and the listed setback distances may not apply to all sites:

ITEM	LEACHFIELD	SEPTIC TANK	SEWER
DRILLED WELL	SEE PLAN	50	50
SPRING	SEE PLAN	75	75
LAKES, PONDS, IMPOUNDMENTS	50	25	25
RIVERS, STREAMS	50	25	10
PROPERTY LINE	25	10	10
ROADWAY, DRIVEWAY, PARKING LOTS	10	5	SEE PLAN
TREES	10	10	10
SERVICE WATER LINE	25	25	SEE PLAN

PROPERTY LINES ARE BASED ON A "PROPERTY SURVEY FOR JAMES CALLERY"
DATED MAY 1986
PREPARED BY MARK WARD OF PALMER COMPANY, LTD.

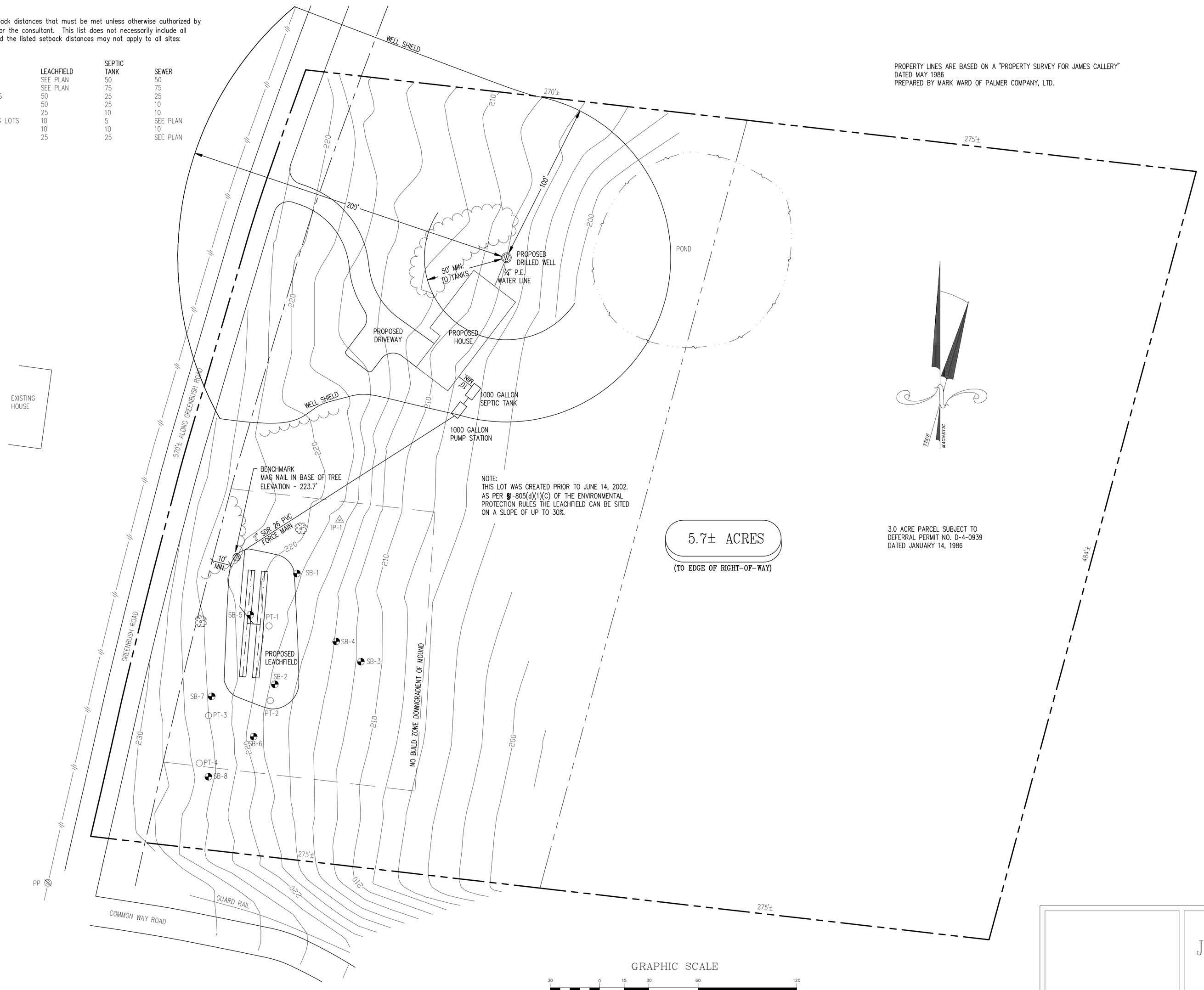

NOTE:
THIS LOT WAS CREATED PRIOR TO JUNE 14, 2002.
AS PER §1-805(d)(1)(C) OF THE ENVIRONMENTAL PROTECTION RULES THE LEACHFIELD CAN BE SITED ON A SLOPE OF UP TO 30%.

5.7± ACRES
(TO EDGE OF RIGHT-OF-WAY)

3.0 ACRE PARCEL SUBJECT TO DEFERRAL PERMIT NO. D-4-0939 DATED JANUARY 14, 1986

LEGEND

TP-1	Traverse point
SB-1	Test pit
PT-1	Percolation test
W	Proposed well
	Benchmark
PP	Utility pole
	Tree
	Overhead power lines
100	10' contours
	2' contours
	Tree line
	Property line
	Right of way line
	Edge of pond

Location Map

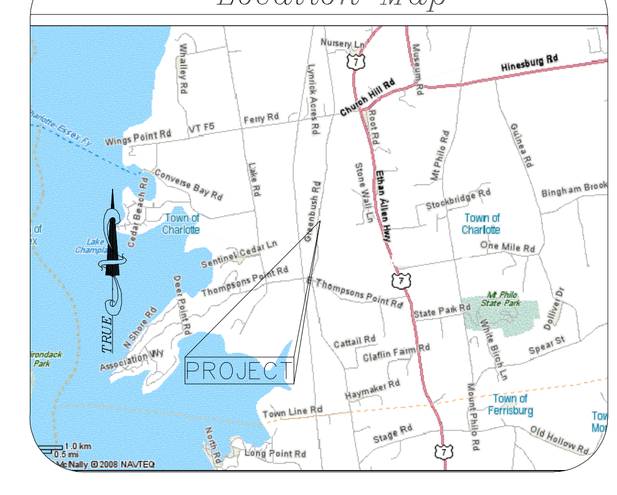

GRAPHIC SCALE

30 0 15 30 60 120

(IN FEET)
1 inch = 30 ft.

Topography by Total Station
Contour Interval 2'
Assumed Datum

THE CONTRACTOR SHALL REVIEW ALL CONSTRUCTION ACTIVITIES, COMPONENT LOCATIONS, SPECIFICATIONS, AND DETAILS PRIOR TO COMMENCEMENT OF SITE WORK AND SHALL NOTIFY MCCAIN CONSULTING OF ANY ISSUES OR DISCREPANCIES THAT ARISE FROM THAT REVIEW.

THIS IS NOT A SURVEY. THIS PLAN DOES NOT MEET THE REQUIREMENTS OF 27 VSA SEC. 1403 FOR THE FILING OF SURVEY PLATS.

Y:\Cadd\29000's\29042\dwg\29042.dwg

ENGINEER:
PETER C. LAZORCHAK, P.E.
VT P.E. 8930

SITE PLAN

JUDITH BILLARD & JAMES LAWRENCE

SINGLE LOT WASTEWATER DESIGN

GREENBUSH ROAD — CHARLOTTE, VT

SCALE : 1" = 30'
DESIGNED BY: PCL PROJECT #29042
DRAWN BY: SJH/WDB
CHECKED BY: PCL/GNM

McCAIN CONSULTING, INC.
93 SOUTH MAIN STREET
WATERBURY, VERMONT 05676

DATE: SEPTEMBER 11, 2009 SHEET 1 OF 2

NOTES

Septic Tank and Building Sewer:

1) Use a 1000 gallon concrete septic tank with an access riser to grade, and an effluent filter.
2) Place tank a minimum of 10' from the building.
3) Use 4" cast iron or SCH 40 PVC from building to tank with one pipe joint placed on undisturbed soil to absorb settling.
4) Slope pipe from building to tank at ¼" per foot.

Pump Station:

1) Test pump on and off levels to verify dose volumes.
2) Test alarm level.
3) Test pump to verify minimum 28" discharge height at leachfield orifices.

Force Main:

1) Perform a hydrostatic leakage test of the force main at 50 psi and hold pressure for two hours.

Leachfield – Performance Based Approach Design Notes (Replacement not required as per §1-804(c)(3)):

1) Assume a four bedroom house. Daily Flow (DF) @ 140 gpd/br for the first three, and 70 gpd for the remaining bedroom = 490 gpd
2) Percolation rate t = 3 minute/inch
3) Application rate (AR) = $(3/\sqrt{t}) = (3/\sqrt{3}) = 1.73$ gal/sf/day
   Maximum application rate for effluent in a mound trench = 1.0 gal/sf/day
4) Required trench area: DF/AR = 490 gpd / 1.0 g/sf/day = 490 sf
5) Actual area: two trenches @ 4' x 65' = 520 sf
6) Basal area application rate: 490 gpd / 0.74 gpd/sf = 662 sf
7) Basal area = 2110 sf
8) Maximum Linear Loading Rate (LLR) = h x f, where
   h = (depth to limiting layer) - (required unsaturated flow depth)
   = 20" + 20" (mound sand) - 36" (unsaturated flow) = 4" or 0.33'.
   and f = LLR factor = 26.2 gpd/lf/ft for fine sandy loam, with a 15.1-20% slope.
   Therefore, maximum LLR = 0.33 x 26.2 = 8.6 gpd/lf.
9) Actual LLR = 490 gpd/ 65 lf = 7.5 gpd/lf. which is less than the maximum allowed.
10) A performanced based design requires 6" naturally occurring unsaturated soil above the calculated level of the effluent plume. For this site 4" of mounding is allowed as noted above. Therefore 20" – 4" = 16" below ground surface which meets the 6" requirement.

Leachfield - Construction Notes:

1) Contact the consultant prior to any work to discuss system layout and inspection requirements.
2) Construction of the mound shall not take place if the soil moisture content is high. If questionable contractor to contact designer prior to construction.
3) Install force main, leaving 4'± above grade.
4) Plow or scarify to limits of fill. Area to be plowed to a depth of 8" with plow lines running parallel with the contours, and throwing the soil uphill. Do not plow if area is wet. Do not run machinery on plowed surface.
5) Mound sand to meet the requirements of §1-913(c), see table:

	Sieve Number	Opening (mm)	Percent Passage, by Weight
Option 1	3/8	9.500	85 - 100
	40	0.420	25 - 75
	60	0.240	0 - 30
	100	0.149	0 - 10
	200	0.074	0 - 5
Option 2	4	4.750	95 - 100
	8	2.380	80 - 100
	16	1.190	50 - 85
	30	0.590	25 - 60
	50	0.297	10 - 30
	100	0.149	2 - 10
Option 3	3/8	9.500	85 - 100
	40	0.420	30 - 50
	200	0.074	0 - 5

6) Sand is to be stockpiled on the edge of the plowed area and placed with a small track machine, keeping a minimum of 6" of sand below the tracks. Do not compact the sand.
7) Place 8" of 1"-1½" clean hard crushed stone or washed stone per the detail. Lay pressure piping and connect to force main. ¼" holes to be pointed up with orifice shields over all holes and spaced according to the detail. Ream all holes to remove burrs. System must be tested prior to covering.
8) Cover pipe with stone and filter fabric. Topsoil, seed, and mulch the entire area. Grade to drain runoff away from system.

Water Supply Basis of Design:

a) Average day demand = 4 bedroom house @ 490 gpd
b) Maximum day demand (gpm) = 0.68
c) Instantaneous peak demand (gpm) = 5 gpm
d) Source capacity = to be determined
e) Storage capacity = not required for single family residence
f) Pump capacities = to be determined
g) Operating pressure ranges = 30-50 psi
h) Reference to the floodplain = this project is not in the floodplain

Water Supply Well:

1) Install well in the location shown on the plan.
2) Provide well driller's log.
3) Provide well driller's certification as specified below.

Inspections and Certifications:

1) It is the owner's/ contractor's responsibility to contact the consultant for the following:

   a) For stakeout of the well and leachfield locations.
   b) For inspection of the scarification of the soil prior to placing stone.
   c) For inspection of the pressurization of the force main to 50 psi.
   d) To observe pump operation and to verify discharge height at the leachfield.

Inspections and Certifications (Continued):

2) The septic system installer will provide the consultant with a signed and dated statement as follows:

   "I hereby certify that the installation-related information submitted is true and correct, and that in the exercise of my reasonable professional judgment, the wastewater system has been installed in accordance with the permitted design and all permit conditions, was inspected, was properly tested, and has successfully met those performance tests.

3) The well driller will provide the consultant with a signed and dated statement as follows:

   "I hereby certify that the installation-related information submitted is true and correct, and that in the exercise of my reasonable professional judgment, the potable water supply has been installed in accordance with the permitted design and all permit conditions, was inspected, was properly tested, and has successfully met those performance tests.

4) The certification of construction as required by section 1-308(a) of the Environmental Protection Rules may not be provided by the designer if the procedures outlined herein are not followed.

Maintenance:

1) At least once a year, the depth of sludge and scum in the septic tank should be measured. The tank should be pumped if:
   (a) The sludge is closer than twelve inches to the outlet baffle,or
   (b) The scum layer is closer than three inches to the septic tank outlet baffle.
   (c) Following septic tank cleaning in units over 5,000 gallons, all interior surfaces of the tank should be inspected for leaks and cracks.

2) At least twice a year, the outlet filter on the septic tank should be removed and cleaned by spraying it with water under normal household pressure.

3) At least once a year, pump stations should be inspected:

   (a) Remove settled solids as necessary. Solids and scum accumulation in the pump station may be indicative of a septic tank outlet filter malfunction, septic tank overloading, or other cause that should be investigated and remedied.
   (b) On/off and alarm floats should be tripped to ensure proper operation.
   (c) inspect delivery of effluent to the leachfield. Slow delivery may indicate impending pump failure.

4) Toxic or hazardous substances should in general not be disposed of in septic systems. These substances may pass through the system in an unaltered state and contaminate groundwater or remain in the septage and subsequently contaminate the soil or corps at the site of ultimate disposal.

5) The leachfields are not designed for the disposal of filter backwash or other byproducts of water treatment, filtration or purification systems.

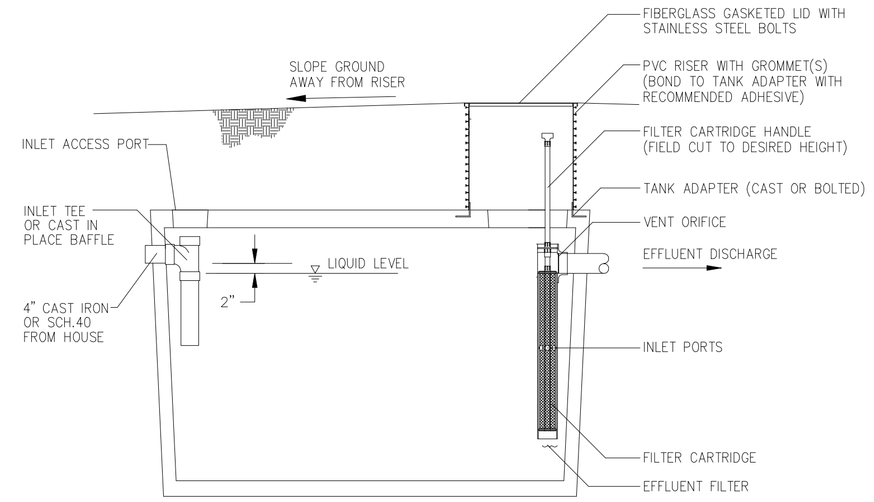

TYPICAL SEPTIC TANK
(NOT TO SCALE)

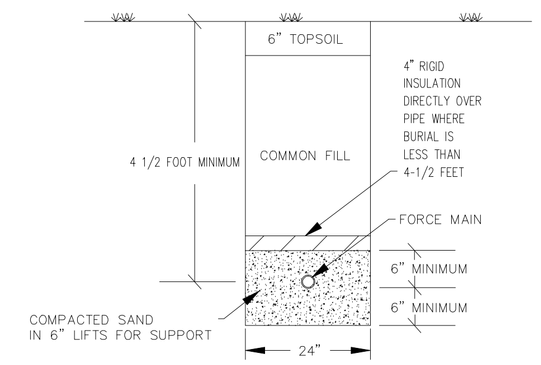

FORCE MAIN TRENCH DETAIL
(NOT TO SCALE)

Soils Information
Test Pits excavated 8/10/09 by backhoe
Spencer Harris, Town of Charlotte, on site

SB-1
0 – 3" Brown topsoil loam
3" –24" Brown fine sandy loam, friable
24"–36" Brown fine sandy loam, firm
Common faint mottles

SB-2
0 –20" Dark brown fine sandy loam, friable
20"–42" Dark gray silt loam
Common distinct mottles

SB-3
Common distinct mottles @ 6"

SB-4
0 –17" Brown loamy fine sand
17"–29" Orange brown fine sandy loam
29"–40" Brown fine sandy loam, firmer, moist
Common faint mottles @ 28"

SB-5
0 –18" Brown loamy fine sandy loam
18"–48" Brown fine sandy loam
Common faint mottles @ 28"

SB-6
0 –18" Dark brown fine sandy loam
18"–48" Gray brown fine sandy loam, friable
Common distinct mottles @ 20"

SB-7
0 –19" Brown fine sandy loam
19"–41" Loamy brown fine sand
41"–53" Gray brown fine sandy loam
Common faint mottles @ 36"

SB-8
0 –16" Brown fine sandy loam
16"–27" Gray fine sandy loam
27"–72" Brown fine sand
No mottles to depth

Percolation Tests

PT-1	3 Min/In	@	18"
PT-2	1 Min/In	@	20"
PT-3	4 Min/In	@	24"
PT-4	1 Min/In	@	24"

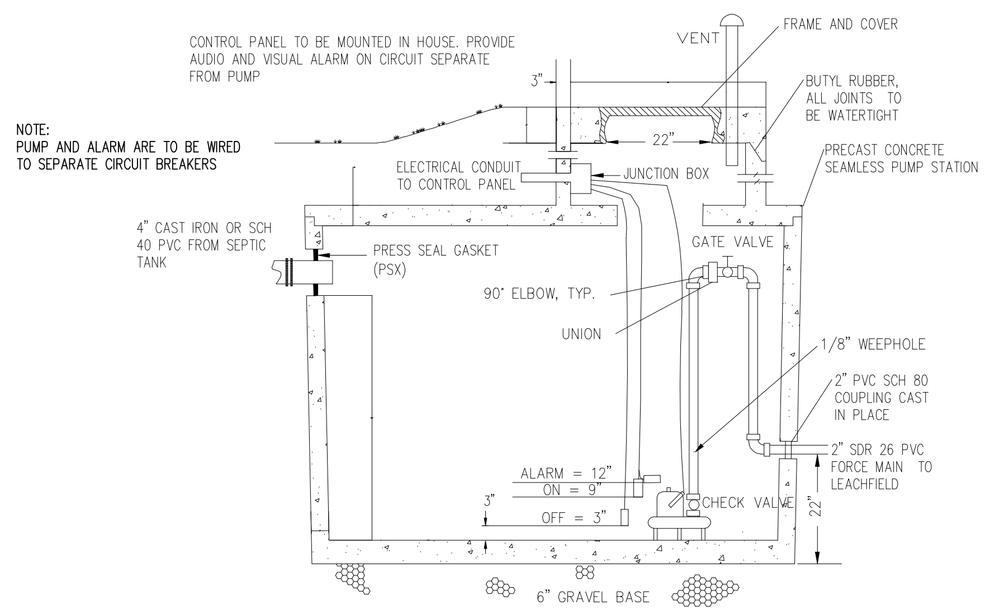

TYPICAL 1000 GALLON PUMP STATION
(NOT TO SCALE)

PUMP PARAMETERS:

PUMP IS TO DELIVER 33 GPM AT 38 FEET TDH.

THE PUMP IS TO BE SUPPLIED WITH STANDARD ALARM AND CONTROLS AS SUPPLIED BY THE MANUFACTURER

VOLUMES AND FLOAT SETTINGS ARE BASED ON A 1000 GALLON PUMP STATION MANUFACTURED BY S.T. GRISWOLD AND COMPANY INC., CATALOG FILE 1000 2PC PS

INSIDE DIMENSIONS VARY WITH EACH TANK SUPPLIER

TANK VOLUMES

BELOW OFF FLOAT	62 GALLONS
DOSE VOLUME (daily flow = 490)	130 GALLONS
BETWEEN ON AND ALARM FLOATS	62 GALLONS
ABOVE ALARM FLOAT (EMERGENCY STORAGE)	926 GALLONS
MINIMUM REQUIRED EMERGENCY STORAGE	490 GALLONS
TOTAL TANK VOLUME	1152 GALLONS

65' TRENCH
UPPER PIPE LENGTH FIRST HOLE TO LAST HOLE = 60' 8" - 14 HOLES
LOWER PIPE LENGTH FIRST HOLE TO LAST HOLE = 60' - 11 HOLES
SEE FLUSHING VALVE DETAIL TO DETERMINE TOTAL PIPE LENGTH

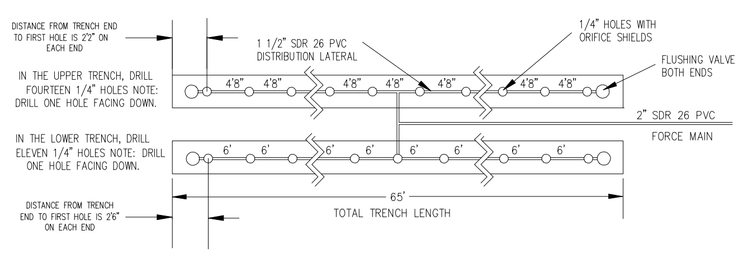

PRESSURE PIPING DETAIL
(NOT TO SCALE)

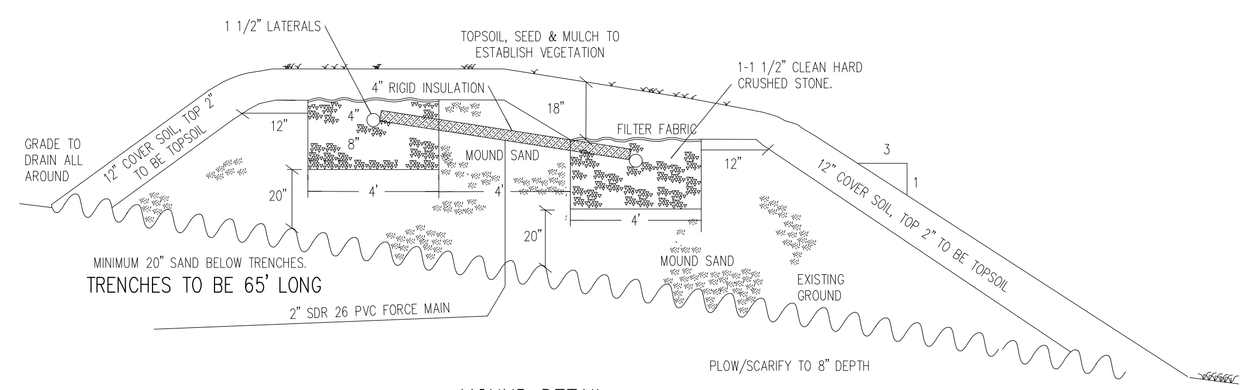

MOUND DETAIL
(NOT TO SCALE)

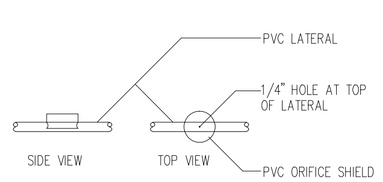

INSTALL ORIFICE SHIELD OVER EACH LATERAL HOLE AFTER THE PUMP DISCHARGE TEST IS COMPLETED AND WITNESSED BY THE DESIGNER.

ORIFICE SHIELD DETAIL
(NOT TO SCALE)

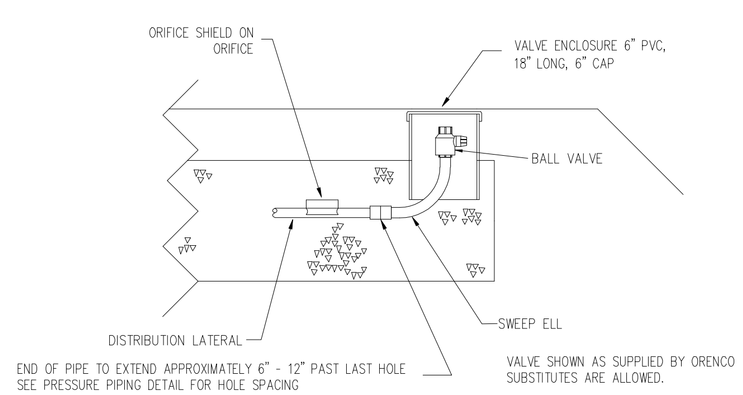

FLUSHING VALVE DETAIL
(NOT TO SCALE)

THE CONTRACTOR SHALL REVIEW ALL CONSTRUCTION ACTIVITIES, COMPONENT LOCATIONS, SPECIFICATIONS, AND DETAILS PRIOR TO COMMENCEMENT OF SITE WORK AND SHALL NOTIFY MCCAIN CONSULTING OF ANY ISSUES OR DISCREPANCIES THAT ARISE FROM THAT REVIEW.

Y:\Cadd\29000's\29042\dwg\29042.dwg

ENGINEER:
PETER C. LAZORCHAK, P.E.
VT P.E. 8930

DETAILS

JUDITH BILLARD & JAMES LAWRENCE

SINGLE LOT WASTEWATER DESIGN

GREENBUSH ROAD — CHARLOTTE, VT

SCALE : 1" = 30'
DESIGNED BY: PCL — PROJECT #29042
DRAWN BY: WDB
CHECKED BY: PCL/GNM

McCAIN CONSULTING, INC.
93 SOUTH MAIN STREET
WATERBURY, VERMONT 05676

DATE: SEPTEMBER 11, 2009 — SHEET 2 OF 2