CHARLOTTE VT SC1

ETHAN ALLEN HWY (VT ROUTE 7), CHARLOTTE, VT 05445

LAT: 44° 19' 19.88"± N

LONG: 73° 14' 45.94"± W

KEY PLAN

GRAPHIC SCALE

200 0 100 200 400 800

(IN FEET)
1 inch = 200 ft. AT 22X34
HALF SIZE AT 11X17

DuBois & King inc.
ENGINEERING • PLANNING • MANAGEMENT • DEVELOPMENT
6 GREEN TREE DRIVE
SO. BURLINGTON, VT 05403
TEL: (802) 878-7661
FAX: (866) 783-7101
www.dubois-king.com
RANDOLPH, VT
SPRINGFIELD, VT
BEDFORD, NH
LACONIA, NH

© Copyright 2014 Dubois & King Inc.

PROFESSIONAL SEAL

NO.	DATE	DESCRIPTION	BY	CK'D

verizon wireless

PROJECT ID: 20151239989
PROJECT TYPE: UTILITY POLE
LOCATION CODE: 385630

CHARLOTTE VT SC1

ETHAN ALLEN HWY (VT RTE 7), CHARLOTTE, VT 05445

SHEET TITLE

OVERALL SITE PLAN

CONSTRUCTION PLANS

DRAWN BY	DATE
GJO	JUN. 2016
CHECKED BY	D&K PROJECT #
LJH	423108P
PROJ. ENG.	D&K ARCHIVE #
LJH	

SHEET NUMBER

C-1

I:_VZW Utility Pole Sites\423108P_VZW Charlotte VT SC1\dwg\Construction Plans\423108P SP01.dwg 6/27/2016 4:56 PM

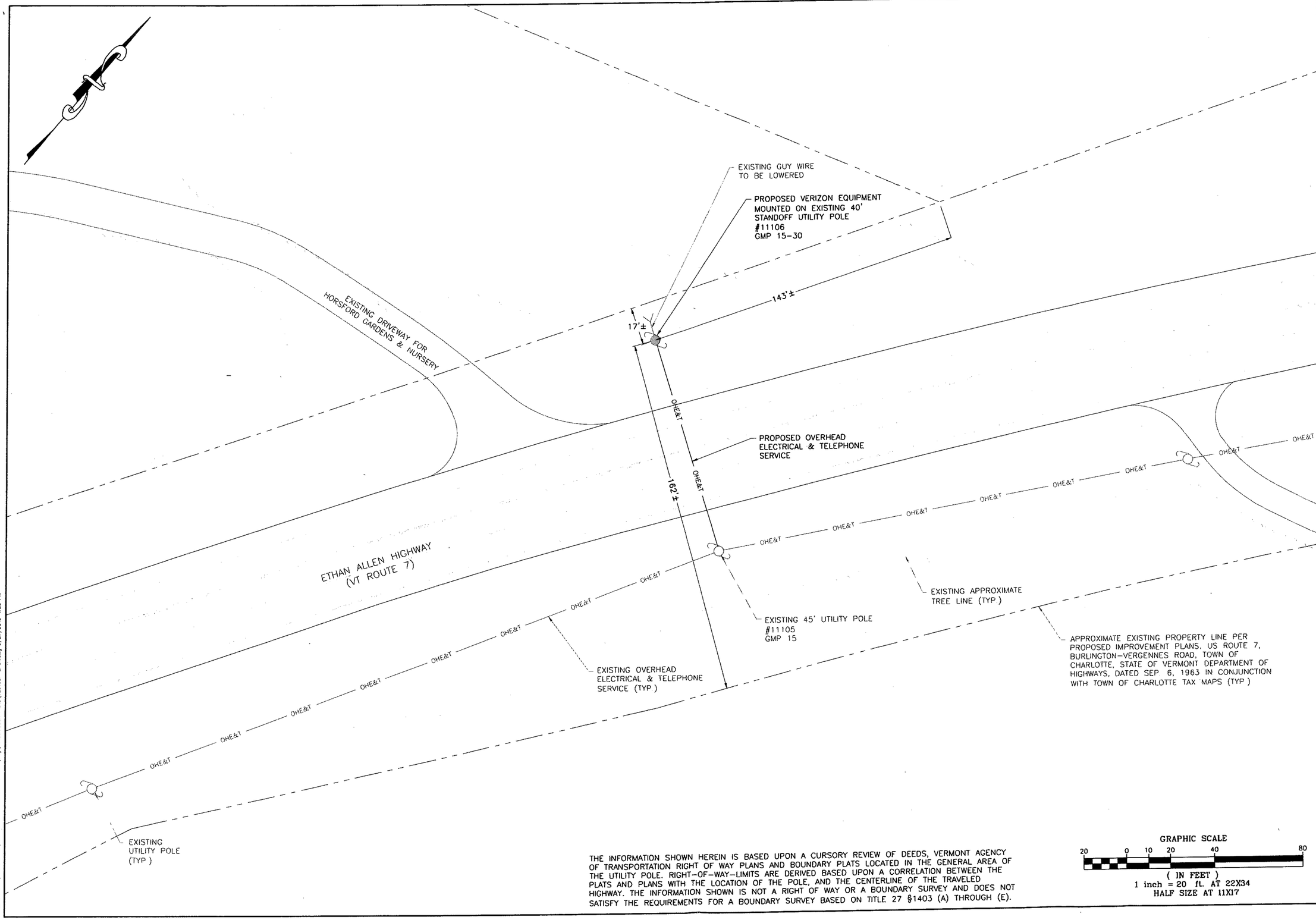

THE INFORMATION SHOWN HEREIN IS BASED UPON A CURSORY REVIEW OF DEEDS, VERMONT AGENCY OF TRANSPORTATION RIGHT OF WAY PLANS AND BOUNDARY PLATS LOCATED IN THE GENERAL AREA OF THE UTILITY POLE. RIGHT-OF-WAY-LIMITS ARE DERIVED BASED UPON A CORRELATION BETWEEN THE PLATS AND PLANS WITH THE LOCATION OF THE POLE, AND THE CENTERLINE OF THE TRAVELED HIGHWAY. THE INFORMATION SHOWN IS NOT A RIGHT OF WAY OR A BOUNDARY SURVEY AND DOES NOT SATISFY THE REQUIREMENTS FOR A BOUNDARY SURVEY BASED ON TITLE 27 §1403 (A) THROUGH (E).

GRAPHIC SCALE

20 0 10 20 40 80

(IN FEET)
1 inch = 20 ft. AT 22X34
HALF SIZE AT 11X17

DuBois & King inc.
ENGINEERING • PLANNING •
MANAGEMENT • DEVELOPMENT
6 GREEN TREE DRIVE
SO. BURLINGTON, VT 05403
TEL: (802) 878-7661
FAX: (866) 783-7101
www.dubois-king.com
RANDOLPH, VT
SPRINGFIELD, VT
BEDFORD, NH
LACONIA, NH
© Copyright 2014 Dubois & King Inc.

PROFESSIONAL SEAL

NO.	DATE	DESCRIPTION	BY	CK'D

verizon wireless

PROJECT ID: 20151239989
PROJECT TYPE: UTILITY POLE
LOCATION CODE: 355630

CHARLOTTE VT SC1

ETHAN ALLEN HWY
(VT RTE 7),
CHARLOTTE, VT
05445

SHEET TITLE

DETAIL
SITE PLAN

CONSTRUCTION PLANS

DRAWN BY	DATE
GJO	JUN. 2016
CHECKED BY	D&K PROJECT #
LJH	423108P
PROJ. ENG.	D&K ARCHIVE #
LJH	

SHEET NUMBER

C-2

F:_VZW Utility Pole Sites\423108P VZW Charlotte VT SC1\dwg\Construction Plans\423108P SP01.dwg 6/27/2015 4:56 PM

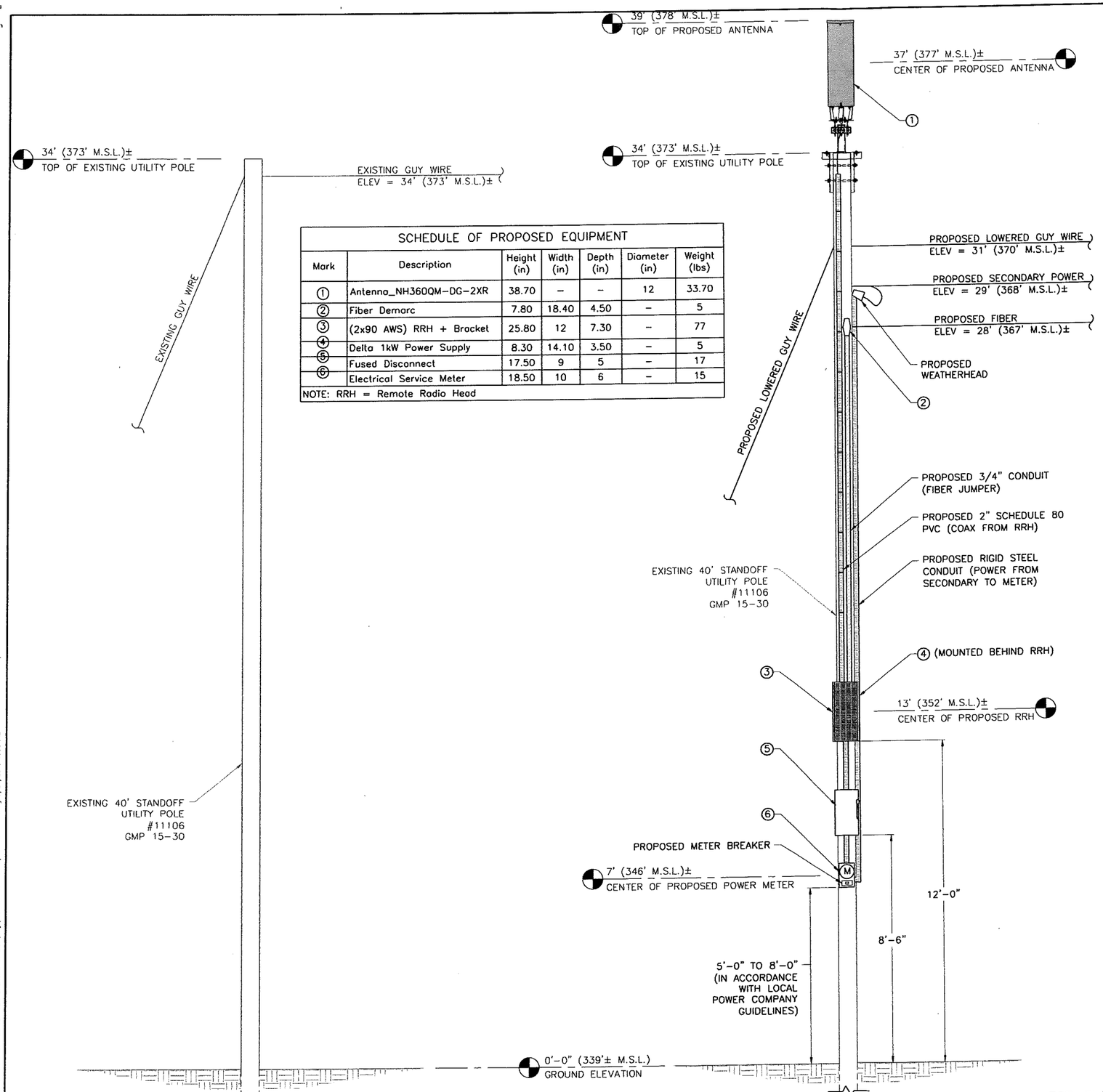

EXISTING STANDOFF UTILITY POLE SOUTHWEST ELEVATION
NOT TO SCALE

PROPOSED EQUIPMENT ON EXISTING STANDOFF UTILITY POLE SOUTHWEST ELEVATION
NOT TO SCALE

SCHEDULE OF PROPOSED EQUIPMENT

Mark	Description	Height (in)	Width (in)	Depth (in)	Diameter (in)	Weight (lbs)
1	Antenna_NH360QM-DG-2XR	38.70	–	–	12	33.70
2	Fiber Demarc	7.80	18.40	4.50	–	5
3	(2x90 AWS) RRH + Bracket	25.80	12	7.30	–	77
4	Delta 1kW Power Supply	8.30	14.10	3.50	–	5
5	Fused Disconnect	17.50	9	5	–	17
6	Electrical Service Meter	18.50	10	6	–	15

NOTE: RRH = Remote Radio Head

GENERAL NOTES:

1. SITE NAME: CHARLOTTE VT SC1
2. SITE LOCATION: 2111 GREENBUSH ROAD, CHARLOTTE, VT 05445, CHITTENDEN COUNTY
3. ELECTRICAL SERVICE PROVIDER: GREEN MOUNTAIN POWER
4. TELEPHONE SERVICE PROVIDER: TBD
5. APPLICANT: NYNEX MOBILE LIMITED PARTNERSHIP 1 AND CELLCO PARTNERSHIP
6. PROPOSED POLE LOCATION: LATITUDE: 44° 19' 19.88"± N; LONGITUDE: 73° 14' 45.94"± W; GROUND EL: 339'± M.S.L.
7. POLE NUMBER: #11106 GMP 15-30
8. VT RTE 7 R.O.W. WIDTH: 180'± AT PROPOSED POLE PER 'STATE OF VERMONT, DEPARTMENT OF HIGHWAYS, PROPOSED IMPROVEMENT. TOWN OF CHARLOTTE, COUNTY OF CHITTENDEN U.S. ROUTE 7, BURLINGTON-VERGENNES ROAD, DATED 9/6/1963.'

ELEVATION PHOTO
NOT TO SCALE

DuBois & King inc.
ENGINEERING • PLANNING • MANAGEMENT • DEVELOPMENT
6 GREEN TREE DRIVE
SO. BURLINGTON, VT 05403
TEL: (802) 878-7661
FAX: (866) 783-7101
www.dubois-king.com
RANDOLPH, VT
SPRINGFIELD, VT
BEDFORD, NH
LACONIA, NH

© Copyright 2014 Dubois & King Inc.

PROFESSIONAL SEAL

NO.	DATE	DESCRIPTION	BY	CK'D

verizon wireless

PROJECT ID: 20151239989
PROJECT TYPE: UTILITY POLE
LOCATION CODE: 385630

CHARLOTTE VT SC1

ETHAN ALLEN HWY (VT RTE 7), CHARLOTTE, VT 05445

SHEET TITLE

POLE ELEVATION

CONSTRUCTION PLANS

DRAWN BY	DATE
GJO	JUN. 2016
CHECKED BY	D&K PROJECT #
LJH	423108P
PROJ. ENG.	D&K ARCHIVE #
LJH	

SHEET NUMBER

C-3

I:_VZW Utility Pole Sites\423108P VZW Charlotte VT SC1\dwg\Construction Plans\423108P SP01.dwg 6/27/2016 4:56 PM

GENERAL NOTES

A. ALL GROUNDING SHALL BE IN ACCORDANCE WITH NESC REQUIREMENTS AND LOCAL UTILITY SPECIFICATIONS. GROUND CONDUCTORS SHALL NOT BE SMALLER THAN #4 COPPER, UNLESS OTHERWISE SPECIFIED.

B. OBJECTIVE IS TO PROVIDE A CELLULAR GROUNDING SYSTEM WITH GROUND RESISTANCE OF LESS THAN 5 OHMS BETWEEN ANY POINT ON THE GROUNDING SYSTEM AND REFERENCE GROUND. MODIFY THE GROUNDING SCHEME WITH THE CELL PROVIDER'S ENGINEER'S APPROVAL TO ACHIEVE DESIRED AC RESISTANCE TO GROUND. CHEMICAL ADDITIVES SHALL NOT BE USED TO ENHANCE MINIMUM RESISTANCE ON THE CELLULAR GROUNDING SYSTEM UNLESS APPROVED BY THE CELL PROVIDER'S ENGINEER. OBTAIN TESTING PROCEDURE FROM THE CELL PROVIDER'S ENGINEER. TEST GROUND GRID IN AN APPROVED METHOD AFTER INSTALLATION TO CONFIRM SPECIFIED RESISTANCE LEVELS HAVE BEEN MET.

C. MINIMUM BENDING RADIUS FOR BURIED GROUND RING SHALL BE 2'-0" NOMINAL AND 12" MINIMUM. ANTENNA GROUNDING CONDUCTOR SHALL BE AS STRAIGHT AS POSSIBLE WITH A MINIMUM BENDING RADIUS OF 6".

D. GROUND CONNECTIONS MADE BELOW GRADE SHALL BE HEAVY DUTY EXOTHERMIC WELD. PROVIDE CADWELD CONNECTIONS, STYLE AND TYPE REQUIRED.
- CABLE TO CABLE (TYPE 'TA')
- CABLE TO ROD (TYPE 'GI' OR 'NC')
- CABLE TO SURFACE (TYPE 'LA')
- CABLE TO FENCE (TYPE 'VS')

E. GROUND CONNECTION TO THE HALO CORNER DROP SHALL BE BY A COMPRESSION LUG CONNECTOR - 15 TON COMPRESSION, 2 HOLE LONG BARREL, ELECTRO-TINNED PLATED HIGH CONDUCTIVITY COPPER, 600V RATED. USE 1/4" DIAMETER BOLT 3/4" SPACING LUGS. CONNECTOR SHALL BE BURNDY "HYLUG SERIES" OR EQUIVALENT

F. CORROSION PROTECTION SHALL BE PROVIDED FOR ALL CONNECTIONS ABOVE AND BELOW GRADE. USE ZRC COLD GALVANIZED COMPOUND MFGD BY ZRC CHEMICAL PRODUCTS, QUINCY, MASS.

G. SURFACES INTENDED TO BE CONNECTED WITH MECHANICAL CONNECTIONS SHALL BE BARE METAL. PRIME AND PAINT OVER BONDED AREA TO PREVENT CORROSION.

H. WHEN CONNECTING ALUMINUM COMPONENTS TO THE GROUNDING SYSTEM, USE UL APPROVED BI-METALLIC CONNECTIONS BETWEEN COPPER CONDUCTORS AND ALUMINUM SURFACES.

I. GROUNDING CONNECTIONS MADE TO BAR PLATE SHALL BE MADE WITH DOUBLE HOLE HYDRAULICALLY INDENTED LUGS.

J. EXTENT OF GROUNDING TO BE INSTALLED BY VZW TO BE DETERMINED BY THE VZW CONSTRUCTION MANAGER. PLANS ILLUSTRATE TYPICAL GROUNDING REQUIRED.

K. ALL EQUIPMENT, CONDUCTORS, AND DEVICES SHALL COMPLY WITH NESC REQUIREMENTS AND LOCAL UTILITY SPECIFICATIONS.

L. ALL EQUIPMENT, RACEWAYS, CABLES, AND CONDUCTORS SHALL BE PROPERLY ANCHORED TO THE POLE PER NESC REQUIREMENTS AND LOCAL UTILITY SPECIFICATIONS.

M. PVC CONDUIT SHALL BE SCHEDULE 40, SUNLIGHT RESISTANT, AND COMPLY WITH LOCAL UTILITY REQUIREMENTS. INNERDUCT SHALL BE ORANGE COLORED, CORRUGATED, SUNLIGHT RESISTANT, AERIAL-USE.

N. ALL SERVICE EQUIPMENT SHALL BE PER UTILITY COMPANY STANDARDS AND ALL ASSOCIATED WIRING AND SERVICE GROUND SHALL COMPLY WITH NEC AND NESC.

O. ALL CONDUCTOR SIZES BASED ON COPPER.

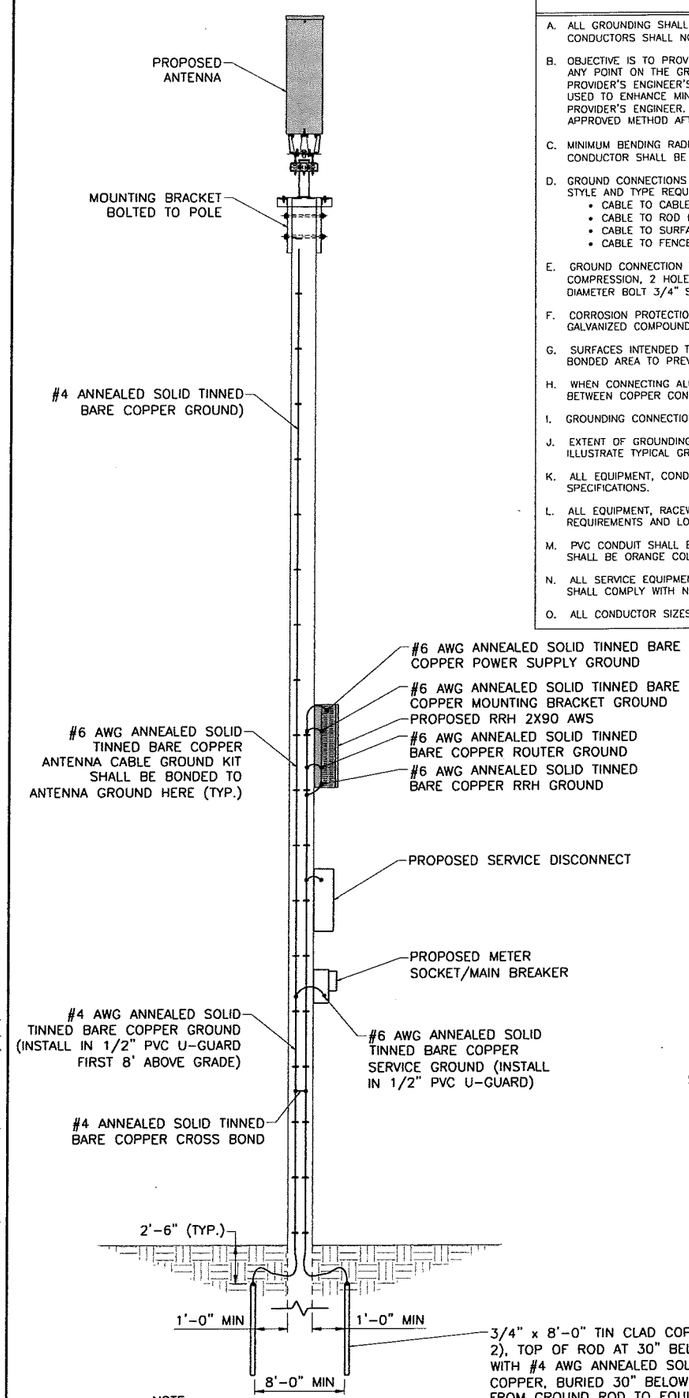

NOTE:
SERVICE GROUND SHALL BE MECHANICALLY CONNECTED USING BRONZED SPLIT BOLTS

UTILITY POLE GROUNDING DETAIL
NOT TO SCALE

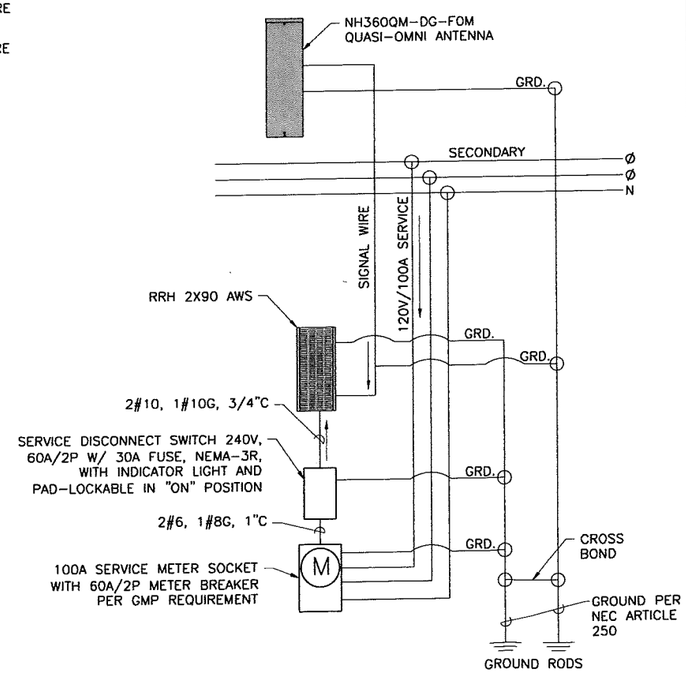

ONE-LINE DIAGRAM
NOT TO SCALE

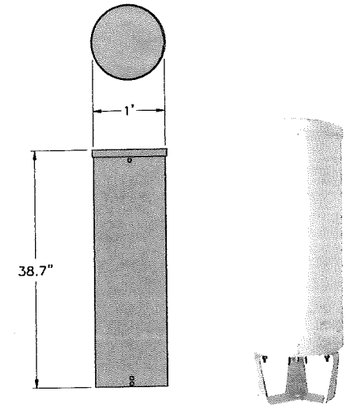

NH360QM-DG-2XR QUASI OMNI ANTENNA DETAILS
NOT TO SCALE

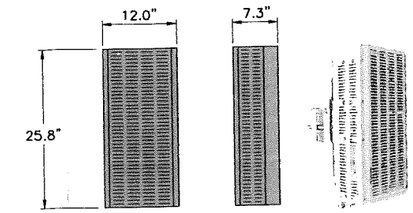

RRH 2X90 AWS DETAILS
NOT TO SCALE

ANTENNA FACIAL SURFACE AREA

NH360QM-DG-2XR:
π X 12" X 38.7" = 10.13 SQ. FT. X 1 ANTENNA = 10.13 SQ. FT.

ALU RRH 2X90 AWS:
25.8" X 12.0" = 2.15 SQ. FT. X 1 RRH UNIT = 2.15 SQ. FT.

TOTAL SURFACE AREA: (10.13 + 2.15) = 12.28 SQ. FT

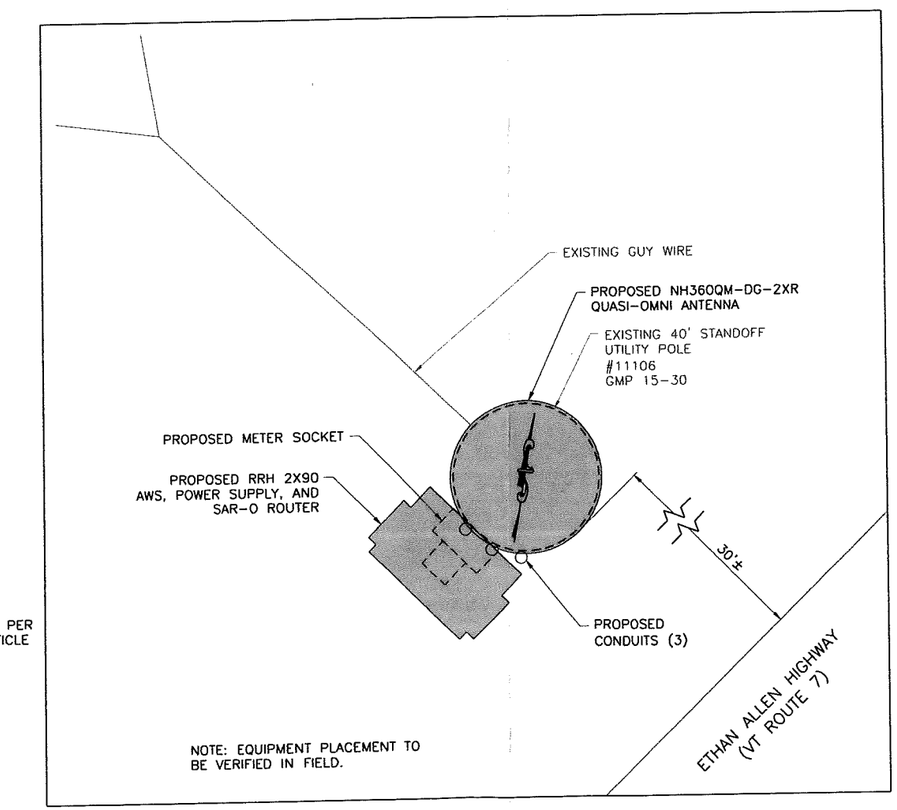

NOTE: EQUIPMENT PLACEMENT TO BE VERIFIED IN FIELD.

EQUIPMENT ORIENTATION PLAN
NOT TO SCALE

DuBois & King inc.
ENGINEERING • PLANNING • MANAGEMENT • DEVELOPMENT
6 GREEN TREE DRIVE
SO. BURLINGTON, VT 05403
TEL: (802) 878-7661
FAX: (866) 783-7101
www.dubois-king.com
RANDOLPH, VT
SPRINGFIELD, VT
BEDFORD, NH
LACONIA, NH

© Copyright 2014 Dubois & King Inc.

PROFESSIONAL SEAL

NO.	DATE	DESCRIPTION	BY	CK'D

verizon wireless

PROJECT ID: 20151239989
PROJECT TYPE: UTILITY POLE
LOCATION CODE: 385630

CHARLOTTE VT SC1

ETHAN ALLEN HWY (VT RTE 7), CHARLOTTE, VT 05445

SHEET TITLE

EQUIPMENT DETAILS

CONSTRUCTION PLANS

DRAWN BY	DATE
GJO	JUN. 2016
CHECKED BY	D&K PROJECT #
LJH	423108P
PROJ. ENG.	D&K ARCHIVE #
LJH	

SHEET NUMBER

C-4

I:_VZW Utility Pole Sites\423108P VZW Charlotte VT SC1\dwg\Construction Plans\423108P SP01.dwg 6/27/2016 4:58 PM

STRUCTURAL STEEL NOTES:

1. ALL STRUCTURAL STEEL IS DESIGNED BY ALLOWABLE STRESS DESIGN (ASD):
   A. STRUCTURAL CHANNELS (OTHER SHAPES)---ASTM A36, (Fy = 36 KSI)
   B. STRUCTURAL PIPE (ROUND SHAPES)---ASTM A53 GRADE B, (Fy = 35 KSI)
   C. CONNECTION BOLTS---ASTM A325-N
   D. THREADED RODS---ASTM A307 GRADE C, (Fy = 58 KSI)
   E. WELDING ELECTRODE---ASTM E 70XX
2. STRUCTURAL STEEL SHALL BE DETAILED, FABRICATED AND ERECTED IN ACCORDANCE WITH THE LATEST PROVISIONS OF AISC MANUAL OF STEEL CONSTRUCTION.
3. BOLT HOLES SHALL BE PUNCHED OR DRILLED, FLAME CUT HOLES ARE NOT ACCEPTABLE.
4. INSTALL FABRICATIONS PLUMB AND LEVEL, ACCURATELY FITTED, AND FREE FROM DISTORTIONS OR DEFECTS.
5. ALL STEEL MATERIAL (EXPOSED TO WEATHER) SHALL BE GALVANIZED AFTER FABRICATION IN ACCORDANCE WITH ASTM A123 "ZINC (HOT DIPPED GALVANIZED) COATINGS" ON IRONS AND STEEL PRODUCTS.
6. ALL BOLTS, ANCHORS AND MISCELLANEOUS HARDWARE SHALL BE GALVANIZED IN ACCORDANCE WITH ASTM A153 "ZINC COATING (HOT-DIP) ON IRON AND STEEL HARDWARE".
7. NOTIFY THE ENGINEER PRIOR TO FIELD CUTTING OR MODIFYING APROVED FABRICATIONS.
8. THE ENGINEER SHALL BE NOTIFIED OF ANY INCORRECTLY FABRICATED, DAMAGED OR OTHERWISE MISFITTING OR NON CONFORMING MATERIALS OR CONDITIONS TO REMEDIAL FOR CORRECTIVE ACTION. ANY SUCH ACTION SHALL REQUIRE ENGINEER REVIEW.
9. ALL BOLTS ATTACHING BRACKETS AND EQUIPMENT TO POLE SHALL NOT PROTRUDE MORE THAN 1" BEYOND NUT.

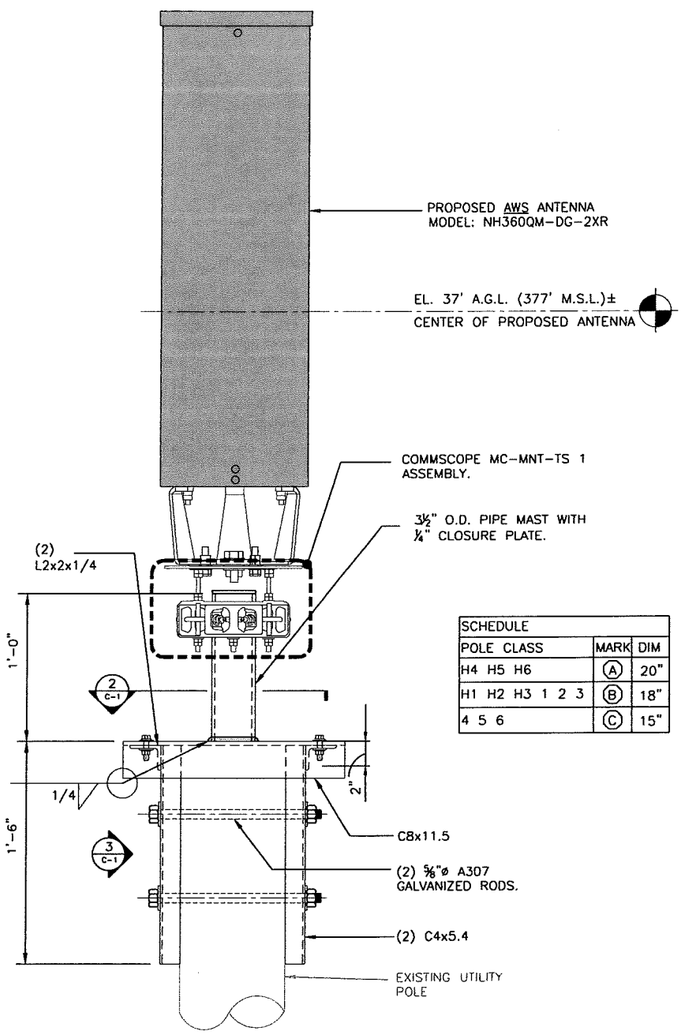

1 / C-1 ANTENNA CONFIGURATION
SCALE: 1" = 1' AT 22X34
HALF SIZE AT 11X17

SCHEDULE		
POLE CLASS	MARK	DIM
H4 H5 H6	A	20"
H1 H2 H3 1 2 3	B	18"
4 5 6	C	15"

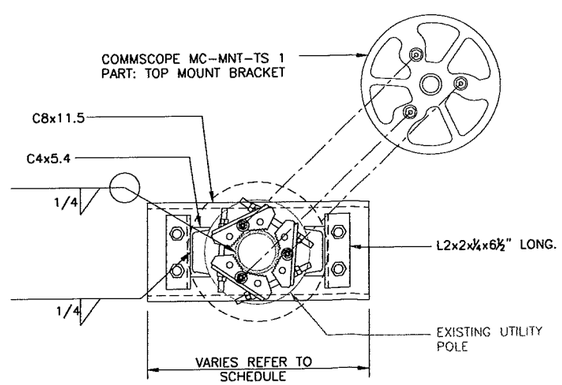

2 / C-1 SECTION
SCALE: 1" = 1' AT 22X34
HALF SIZE AT 11X17

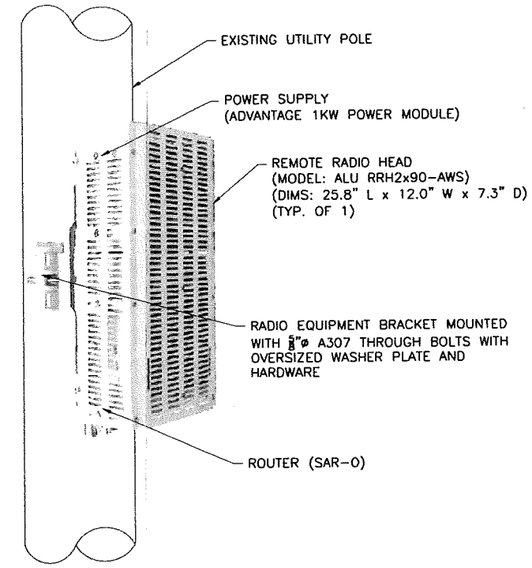

4 / C-1 POLE MOUNTED RADIO EQUIPMENT DETAIL
NOT TO SCALE

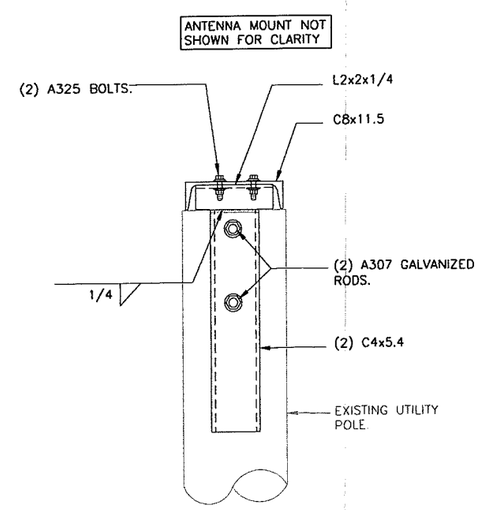

3 / C-1 SECTION
SCALE: 1" = 1' AT 22X34
HALF SIZE AT 11X17

DuBois & King inc.
ENGINEERING • PLANNING • MANAGEMENT • DEVELOPMENT
6 GREEN TREE DRIVE
SO. BURLINGTON, VT 05403
TEL: (802) 878-7661
FAX: (866) 783-7101
www.dubois-king.com
RANDOLPH, VT
SPRINGFIELD, VT
BEDFORD, NH
LACONIA, NH

© Copyright 2014 Dubois & King Inc.

PROFESSIONAL SEAL

NO.	DATE	DESCRIPTION	BY	CK'D

verizon wireless

PROJECT ID: 20151239989
PROJECT TYPE: UTILITY POLE
LOCATION CODE: 385630

CHARLOTTE VT SC1

ETHAN ALLEN HWY
(VT RTE 7),
CHARLOTTE, VT
05445

SHEET TITLE

EQUIPMENT DETAILS 2

CONSTRUCTION PLANS

DRAWN BY	DATE
GJO	JUN. 2016
CHECKED BY	D&K PROJECT #
LJH	423108P
PROJ. ENG.	D&K ARCHIVE #
LJH	

SHEET NUMBER

C-5

H:_VZW Utility Pole Sites\423108P VZW Charlotte VT SC1\dwg\Construction Plans\423108P SP01.dwg 6/27/2016 4:56 PM