VERMONT WATER SUPPLY RULE – CHAPTER 21
TABLE A – REQUIRED MINIMUM SEPARATION DISTANCES

Potential Source of Contamination and other Siting Limitations	Separation Distance
Roadway, Parking Lot (outer edge of shoulder)	25'
Driveway (less than 3 residences)	15'
Sewage System Disposal Fields	a.
Subsurface Wastewater Piping and Related Tanks	50'
Property Line	10'b
Limit of Herbicide Application on Utility R.O.W.	100'c
Surface Water	10'd
Flood ways	e.
Buildings	10'
Concentrated Livestock Holding Area & Manure Storage Systems	200'
Hazardous or Solid Waste Disposal Site	f.
Non–sewage Wastewater Disposal Fields	f.

a. See Table B
b. Increased to 50' when adjacent to agricultural cropland.
c. Applies to rights–of–way (ROW) where herbicides have been applied in the past 12 months or may be applied in the future. This distance may be increased to 200' depending on the active ingredient in the herbicide according to Vermont Regulations for Control of Pesticides.
d. For Public water sources, see Appendix A, part 3, Subpart 3.3.8.
e. Water sources shall not be located in a flood way.
f. If a water source is potentially downgradient of a source of contamination, then the Agency shall apply the criteria in 11.4.2.2.

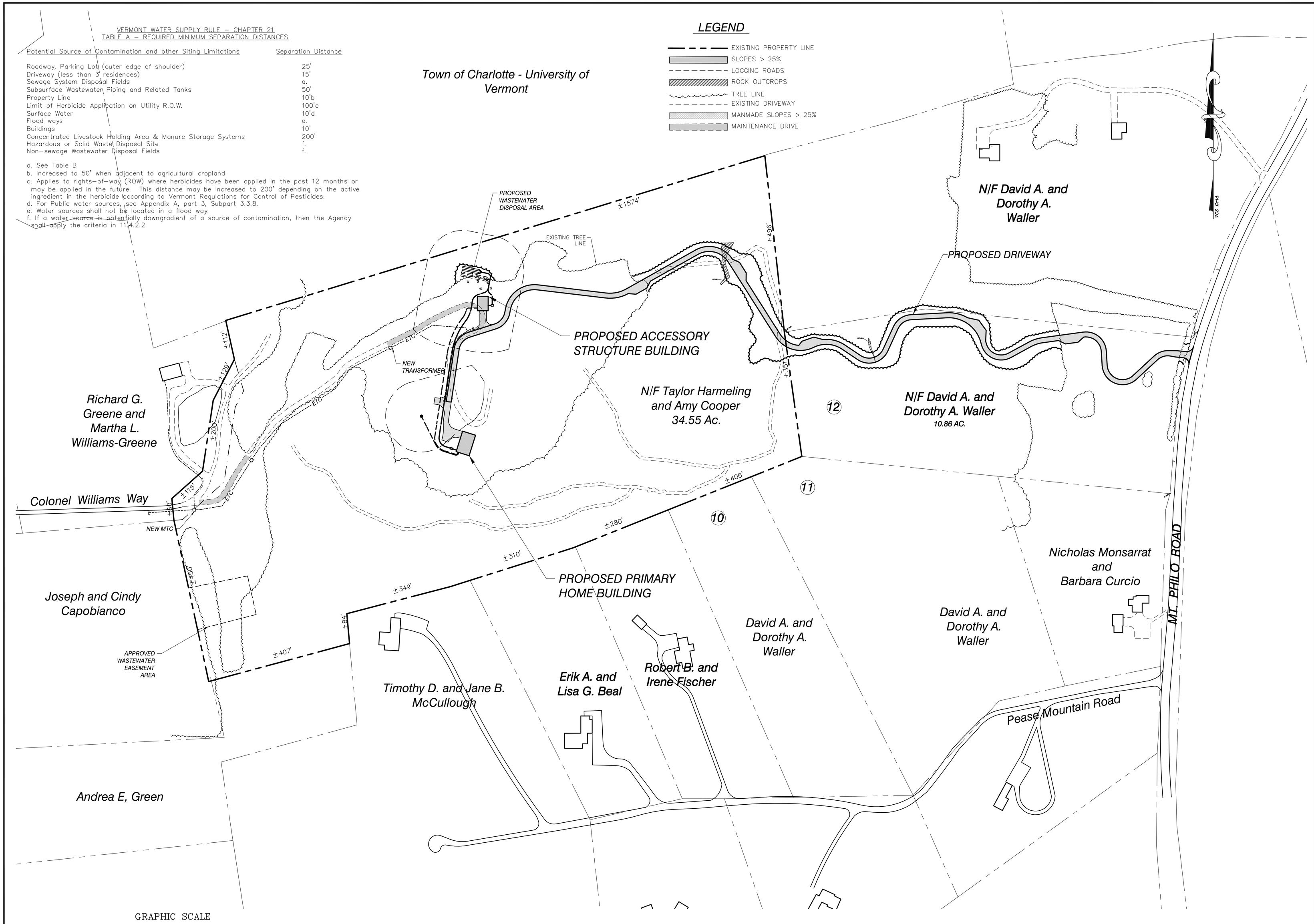

SITE ENGINEER:

CIVIL ENGINEERING ASSOCIATES, INC.
10 MANSFIELD VIEW LANE, SOUTH BURLINGTON, VT 05403
802-864-2323 FAX: 802-864-2271 web: www.cea-vt.com

COPYRIGHT © 2012 – ALL RIGHTS RESERVED

DRAWN: MAB
CHECKED: DSM
APPROVED: DSM

OWNER:

TAYLOR HARMELING

PROJECT:

PROPOSED DRIVEWAY IMPROVEMENTS

COLONEL WILLIAMS WAY
CHARLOTTE
VERMONT

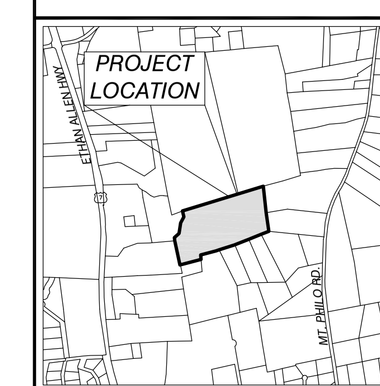

LOCATION MAP
1" = 2000'

DATE	CHECKED	REVISION

OVERALL WASTEWATER PLAN

DATE: OCT, 2012
SCALE: 1" = 120'
PROJ. NO.: 12196
DRAWING NUMBER: C1.0

P:\AutoCADD Projects\2012\12196\1-CADD Files - 12196\Dwg\12196-C.dwg, 3/15/2013 3:01:31 PM, jlarose

Harmeling Property Test Pitting

December 8, 2003
Stephen A. Vock

TP #1
0"-6" Loam topsoil
6"-18" Stony loam
18"-32" Light brown sandy gravel
32"-72" Very coarse stony sand

No mottling No ledge

TP #2
0"-6" Loam topsoil
6"-24" Stony loam
24"-72" Gravelly sand

No mottling No ledge

TP #3
0"-6" Loam topsoil
6"-30" Stony loam
30"-42" Gravelly sand

No mottling No ledge

TP #4
0"-6" Dark loam topsoil
6"-32" Stony loam
32"-64" Very coarse stony sand

No mottling No ledge

Basis of Design

Design Flow

4-BR Home	490 GPD
2-BR Barn	280 GPD
Total Flow	770 GPD

Disposal Field
Limiting Percolation Rate = 5.0 min/in
$3/\sqrt{(t)} = 3/\sqrt{(5)} = 1.34$ GPD/SF

Primary Area
4' Wide Absorbtion Trench w/ 24" Stone
66% Area Reduction = 575 SF * 0.66 = 380 SF
380 SF / 4 FT = 95 LF of Trench
Required/Use: Two 4' x 48' Trenches = 384 SF Provided

Replacement Area
4' Wide Absorbtion Trench w/ 12" Stone
770 GPD / (1.37 GPD/LF) = 562 SF - Use 575 SF
Required: Two 4' x 72' Trenches = 576 SF Provided

Required Separation to Bedrock = 4 FT min. provided

House Pump Sizing
516.5 = Invert of Inlet of Distribution Box(or High Pt of FM)
512.0 = Low Elevation in Pump Station (FT)
4.5 = Elevation Head (FT)

Length of SCH 40 PVC Force Main = 576 FT
Diameter of Force Main = 1.5"
Design Flow Rate = 19.5 GPM
Friction Loss per 100 LF = 3.35 FT
19.3 = Resulting Friction Head (FT)
4.5 = Elevation Head (FT)
1.0 = Minor Losses (FT)
0 = Design Residual Pressure (FT)
24.8 = Design TDH
Use Orenco PKP350, 1ϕ, 60 Hz, 115 V, 0.5 HP or approved equal

Pump Station Emergency Storage
Required=490 GAL, 500 GAL Provided

Septic Tank
Minimum Size Required = 1,000 Gal for Design Flows <667 GPD
Effluent Filter Required

Percolation Test Results

On: 2-5-2004
By: Jeff Olesky
Jack Milbank
24" holes

Perc Test #1: 5.0 min/in
Perc Test #2: 3.0 min/in
Perc Test #3: 5.0 min/in
Perc Test #4: 4.0 min/in

Apartment Pump Sizing
516.5 = Invert of Inlet of Distribution Box(or High Pt of FM)
505.0 = Low Elevation in Pump Station (FT)
11.5 = Elevation Head (FT)

Length of SCH 40 PVC Force Main = 576 FT
Diameter of Force Main = 1.5"
Design Flow Rate = 19.5 GPM
Friction Loss per 100 LF = 3.35 FT
8.8 = Resulting Friction Head (FT)
11.5 = Elevation Head (FT)
1.0 = Minor Losses (FT)
0 = Design Residual Pressure (FT)
21.3 = Design TDH
Use Orenco PKP350, 1ϕ, 60 Hz, 115 V, 0.5 HP or approved equal

Pump Station Emergency Storage
Required=280 GAL, 500 GAL Provided

Septic Tank
Minimum Size Required = 1,000 Gal for Design Flows <667 GPD
Effluent Filter Required

MINIMUM ISOLATION DISTANCES

(Contact Engineer for any Clarifications or Conflicts)

	Horizontal Distance (Feet)		
	Leachfield	Septic Tank	Sewer
Drilled Well Serving 1 Home – Up Slope of Disposal Field	100 (Min.)[1]	50	50
Drilled Well Serving 1 Home – Down Slope of Disposal Field	200 (Min.)[1]	50	50
Shallow Well or Spring, Up Slope of Disposal Field	150 (Min.)[1]	75	75
Shallow Well or Spring, Down Slope of Disposal Field	500 (Min.)[1]	75	75
Lakes, Ponds and Impoundment	50	25	25
Rivers, Streams	50	25	10
Drainage Swales, Roadway Ditches	25	–	–
Municipal Water Main	50	50	10
Service Water Lines	25	25	10
Roadways, Driveways, Buildings	10	5	5[4]
Top of embankment or slope > 30%	25	10	–
Property Line	10 (25 Downslope)[2]	10	10
Trees	10	10	10
Replacement Area	10	–	–
Foundation, Footing Drains	35 (75 Downslope)[3]	10	–

1. Isolation distances to well locations may vary due to site conditions – contact Engineer for verification with the Vermont Water Supply Rule Regulations.
2. For mound disposal systems, the limit of mound fill must be 25 feet from any downhill property line and 10 feet from side or uphill property lines.
3. If a curtain or foundation drain is downslope of the leachfield, the leachfield cannot be closer than 75 feet to the drain. If the drain is upslope of the leachfield, it shall be 35' if possible and 20' minimum.
4. Sewers under roads, driveways or parking lots may require protective conduits or sleeves.

LEGEND

- EXISTING CONTOUR
- PROPOSED CONTOUR
- APPROXIMATE PROPERTY LINE
- APPROXIMATE SETBACK LINE
- CONCRETE MONUMENT
- GRAVITY SEWER LINE
- FORCE MAIN
- WATER LINE
- UNDERGROUND ELECTRIC
- DECIDUOUS TREE
- CONIFEROUS TREE
- EDGE OF BRUSH/WOODS
- FENCE
- DRAINAGE SWALE
- TEST PIT
- PERCOLATION TEST
- WELL
- PROJECT BENCHMARK

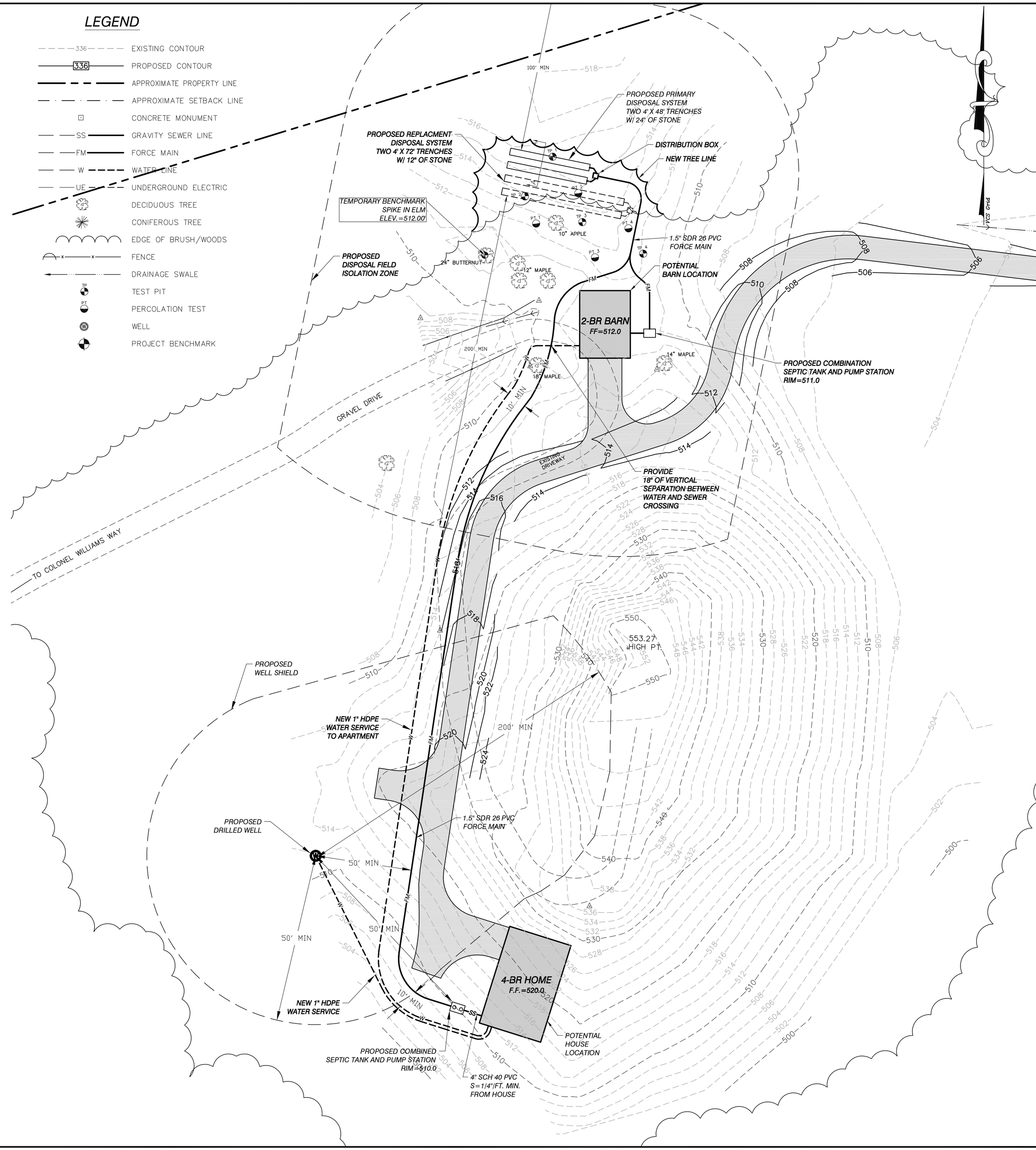

SITE ENGINEER:

CIVIL ENGINEERING ASSOCIATES, INC.
10 MANSFIELD VIEW LANE, SOUTH BURLINGTON, VT 05403
802-864-2323 FAX: 802-864-2271 web: www.cea-vt.com

COPYRIGHT © 2013 – ALL RIGHTS RESERVED

DRAWN JDL
CHECKED DSM
APPROVED DSM

OWNER:

TAYLOR HARMELING

PROJECT:

HARMELING WASTEWATER SYSTEM

COLONEL WILLIAMS WAY
CHARLOTTE, VERMONT

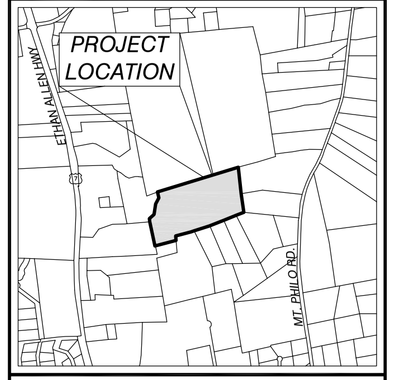

LOCATION MAP
1" = 2000'

DATE	CHECKED	REVISION

WASTEWATER SITE PLAN

DATE FEB., 2013
SCALE 1" = 30'
PROJ. NO. 12196
DRAWING NUMBER C2.0

P:\AutoCADD Projects\2012\12196\1-CADD Files - 12196\Dwg\12196-C.dwg, 3/15/2013 3:02:10 PM, jlarose

FORCE MAINS

PART 1 – GENERAL

1.01 Summary

A. Section includes:
1. Force Main Materials

1.02 References

A. All work shall be done in accordance with the State of Vermont Environmental Protection Rules effective September 29, 2007.

PART 2 – PRODUCTS

1.01 General

A. Force Mains: PVC pipe shall conform in all respects to the latest revisions of ASTM Specifications D–2241. All pipe fittings shall be SDR 26 (or SCH 40) clearly marked as follows:

– Manufacturer's Name and Trademark
– Nominal Pipe Size (as shown on plans)
– Material Designation

Joints shall be push–on type using elastomeric gaskets factory installed conforming to ASTM Specification D–3212.

B. Crushed stone shall be clean, durable and no smaller than 3/4" or larger than 1 1/2 inches in diameter.

PART 3 – EXECUTION

3.01 Testing Notes

A. The wastewater system shall be inspected during critical stages of construction by a qualified consultant. This shall include at a minimum the staking of the disposal field, the trenches after the initial 9 inches of stone and distribution piping is placed, the installation and pressure test of distribution piping, and a final inspection of the entire system. The Contractor will be responsible for contacting the Engineer to set up the inspection schedule.

B. Testing of pressure distribution shall be done in the Engineer's presence. Pressure shall be measured to insure a minimum of 1 psi. (See section E above).

C. The distribution line shall then be carefully placed on the bedding with no slope, orifice shields snapped into place, and covered with at least 2" of crushed stone

D. All work shall be done in accordance with the State of Vermont Environmental Protection Rules and the Towns Sewage Ordinance Standards.

E. Prior to use of the system, the qualified consultant shall submit a written report to the State of Vermont stating that the system has been installed according to the approved plans and permit. The report shall specifically address the inspection of the site preparations and include numerical results of the orifice discharge rate comparison.

3.02 Pressure Pipe Leakage Testing

A. General: All force mains shall pass the hydrostatic pressure test and leakage test described herein. Prior to testing, all anchors and braces shall be installed. All concrete thrust blocks and restraints shall be in place and cured at least seven days. All buried pipe shall be backfilled. Suitable test plugs shall be installed and air release valves shall be installed at the high points.

B. Hydrostatic Test: The following procedure shall be used:
1. All air release valves shall be opened and the pipe shall be filled with water at a rate not to exceed the venting capacity of the air release valves.
2. The water pressure shall be raised to 150 percent of the designed operating pressure or 60 psi minimum at the highest point.
3. Failure to hold the designated pressure within 5 psi of the specified test pressure for the two hour period constitutes a failure of the section tested.

C. Leakage Test: The following procedure shall be used:
1. Leakage shall be defined as the quantity of water that must be supplied into the pipe being tested to maintain pressure within 5 psi of the specified test pressure.
2. No pipe installation shall be accepted if the leakage is greater than that determined by the following formula:

$$L = \frac{ND(P)^{0.5}}{7{,}400}$$

Whichever is less

$$L = \frac{SD(P)^{0.5}}{148{,}000}$$

S = Length of Pipe Testing (ft)
L = Allowable Leakage in Gal/Hr
D = Nominal Diameter of Pipe (in)
P = Average Test Pressure (psi)
N = Number of Joints in the Pipeline Tested

All testing shall be conducted in accordance with AWWA C600–87 or latest revision.

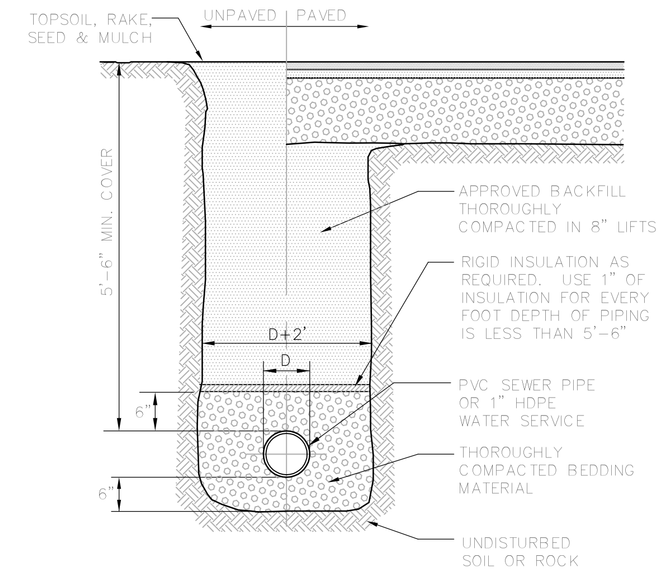

TYPICAL TRENCH DETAIL

N.T.S.

NOTES:

1. Compaction of backfill and bedding shall be a minimum of 90% (95% under roadway surfaces) of maximum dry density determined in the standard proctor test (ASTM D698).
2. Bedding material shall not be placed on frozen subgrade.
3. Approved backfill shall not contain any stones more than 12" in largest dimension (6" in roadways, 2" maximum diameter within 2' of the outside of the pipe), or contain any frozen, wet, or organic material.
4. Trenches shall be completely dewatered prior to placing of pipe bedding material and kept dewatered during installation of pipe and backfill.
5. In trenches with unstable materials, trench bottom shall first be stabilized by placement of filter fabric then crushed stone (3/4" maximum).
6. The sides of trenches 4' or more in depth entered by personnel shall be sheeted or sloped to the angle of repose as defined by O.S.H.A. standards.
7. Bedding material shall consist of crushed stone, gravel or sand with a maximum size of 3/4". Submit a sample to the Engineer for approval.

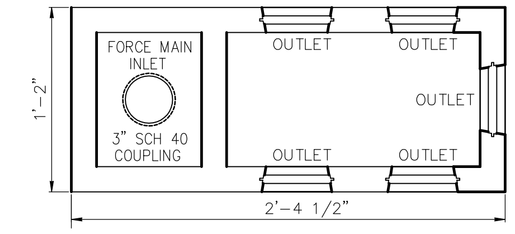

TOP VIEW

*4" LOW PRESSURE SEAL TYPICAL AT ALL OPENINGS EXCEPT FORCE MAIN INLET

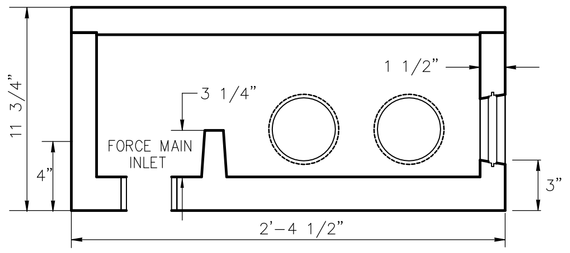

SECTION

DISTRIBUTION BOX

(FM INLET, 5 OUTLET) NTS

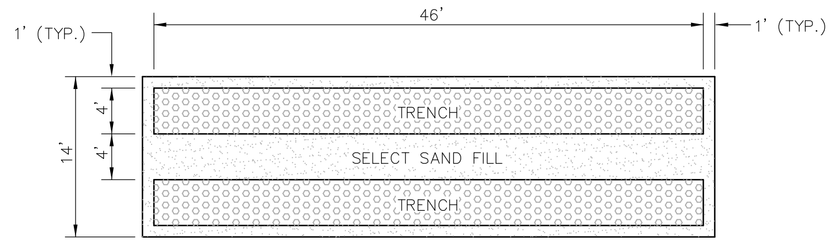

TYPICAL TRENCH PLAN

N.T.S.

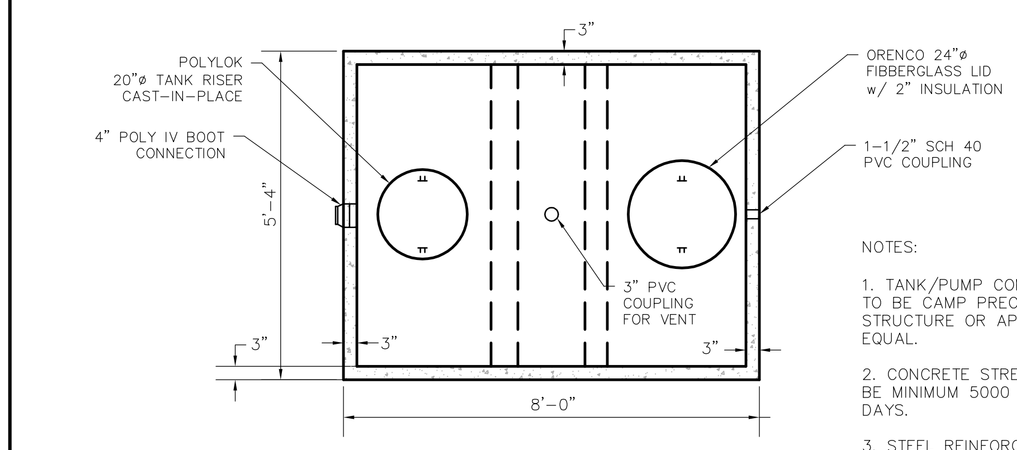

NOTES:

1. TANK/PUMP COMPARTMENT TO BE CAMP PRECAST STRUCTURE OR APPROVED EQUAL.

2. CONCRETE STRENGTH TO BE MINIMUM 5000 psi @ 28 DAYS.

3. STEEL REINFORCEMENT TO BE GRADE 60.

PLAN

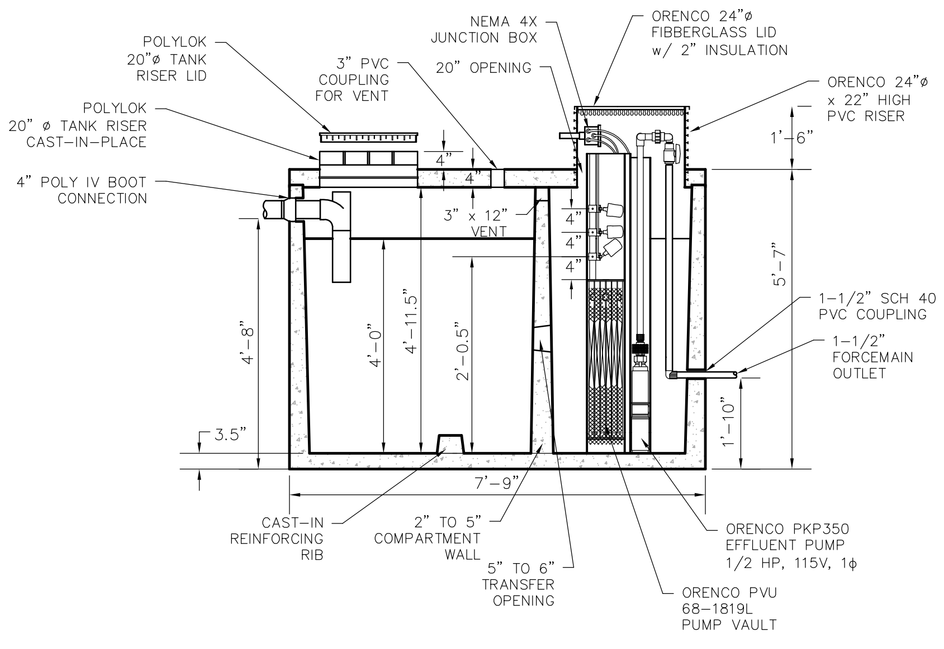

SECTION

1000 GALLON COMBINED SEPTIC TANK/PUMP STATION

N.T.S.

PUMP STATION / SEPTIC TANK TESTING

The tanks shall be tested by the following procedure and in conformance with the State of Vermont – Environmental Protection Rules:

1. Exfiltration Leakage Test: All pipes and other openings into the tank shall be suitably plugged and the plugs braced to prevent blowout. The tank shall then be filled with water to the top of the riser section. A period of time may be permitted, if the Contractor so wishes, to allow for absorption. At the end of this period, the tank shall be refilled to the top of the riser, if necessary, and the measuring time of at least four hours begun. At the end of the test period, the tank shall be refilled to the top of the riser, measuring the volume of water added. This amount shall be converted to gallons per vertical foot depth for 24 hours. The leakage for each tank shall not exceed four gallon/vertical foot/day. If leakage exceeds the allowable rate, repairs shall be made as approved by the Engineer and the tank retested. If the Contractor elects to backfill prior to testing, the testing shall be at his own risk, and it shall be incumbent upon the Contractor to determine the reason for any failure of the test. No adjustment in the leakage allowance will be made for unknown causes such as leaking plugs, absorption, etc. It will be assumed that all loss of water during the test is a result of leaks through the joints or through the concrete. Furthermore, the Contractor shall take any steps necessary to assure the Engineer that the water table is below the bottom of the tank throughout the test.

OR

2. Vacuum test in accordance with ASTM C1227–03, Standard Specification for Precast Concrete Septic Tanks, except as noted below:

–seal the empty tank and apply a vacuum to 5 inches (100mm) of mercury. The tank is approved if 90% of vacuum is held for 5 minutes.

Septic Tank Notes

1. Septic tank shall be a precast concrete tank, unless otherwise approved.

2. Maintenance
– At least once a year, the depth of sludge and scum in the septic tank should be measured. The tank should be pumped if:
– The sludge is closer than twelve inches to the outlet baffle or;
– The scum layer is closer than three inches to the outlet baffle.
– Under no circumstances should anyone enter a septic tank.

3. Recommendations
– The use of garbage grinders is discouraged as sludge accumulation in the septic tank can be increased by up to 40%. If used, the septic tank will require more frequent pumping.
– The septic system is designed to handle human waste and toilet paper, plus water from plumbing fixtures such as toilets, baths and sinks. Moderate use of household cleaners, detergents and bleach should not damage your system; however, indiscriminate use may cause problems. Non–degradable paper products and any other non–biodegradable substances should not be put in your wastewater system.
– Minimize the amount of water used in the household. Excessive water could flush solids from the septic tank to the disposal field which leads to clogging or plugging of the piping. When dishwashers and washers are used, make sure loads are full and stagger their use to reduce peak flows, i.e. stagger loads of laundry over several days instead of one day.

4. Walkways, patios and decks or other permanent structures should not be constructed over the septic tank.

5. There should be no need to use commercial "starter", "bacterial feeds", or "cleaners", etc. Bacteria in a septic tank system occurs naturally.

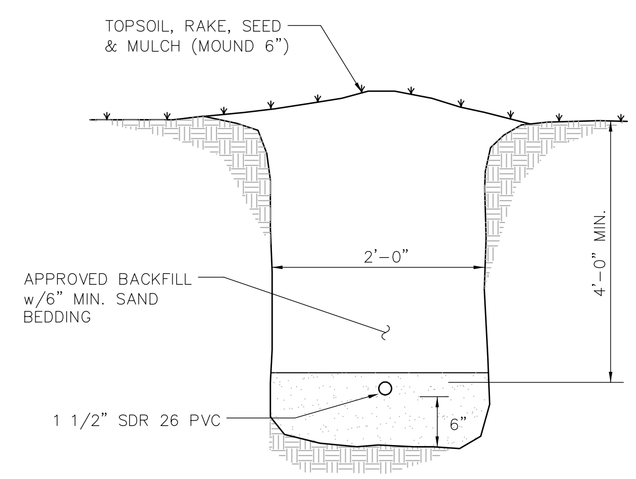

FM TRENCH SECTION

N.T.S.

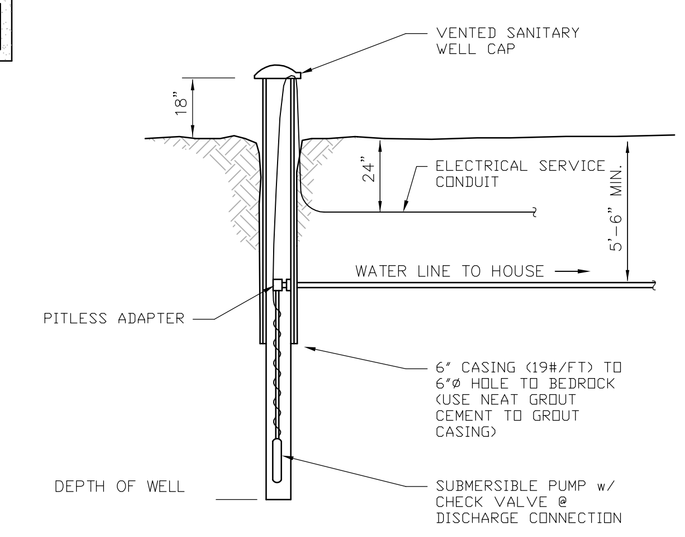

DESIGN BASIS:
AVERAGE DAILY DEMAND = 770 GALLONS (4 BEDROOMS @ 490 GPD)
(2 BEDROOMS @ 280 GPD)
MAXIMUM DAY DEMAND 600 GPD/720 MIN. = 1.07 GPM
INSTANTANEOUS PEAK DEMAND = 10 GPM (2 RESIDENTIAL UNITS)

NOTE:

THE WELL SHALL BE CONSTRUCTED IN ACCORDANCE WITH THE VERMONT WATER SUPPLY RULE – CHAPTER 21 (PART II SMALL SCALE WATER SUPPLY SYSTEMS)

DRILLED WELL DETAIL

N.T.S.

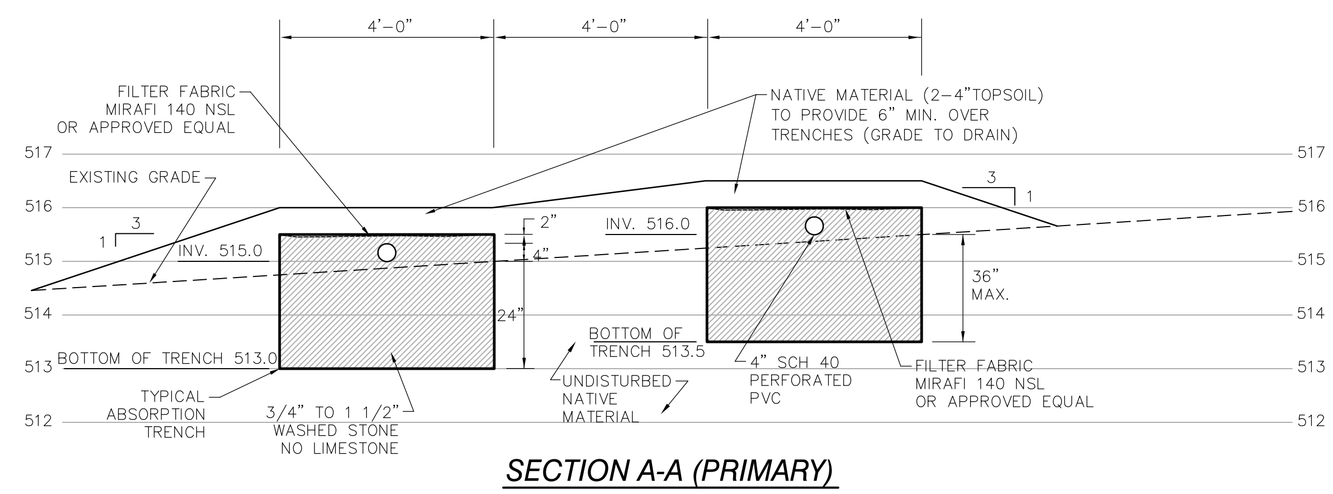

SECTION A-A (PRIMARY)

1/2" = 1'-0"

SITE ENGINEER:

CIVIL ENGINEERING ASSOCIATES, INC.
10 MANSFIELD VIEW LANE, SOUTH BURLINGTON, VT 05403
802-864-2323 FAX: 802-864-2271 web: www.cea-vt.com

COPYRIGHT © 2013 – ALL RIGHTS RESERVED

DRAWN: JDL
CHECKED: DSM
APPROVED: DSM

OWNER:

TAYLOR HARMELING

PROJECT:

PROPOSED DRIVEWAY IMPROVEMENTS

COLONEL WILLIAMS WAY
CHARLOTTE
VERMONT

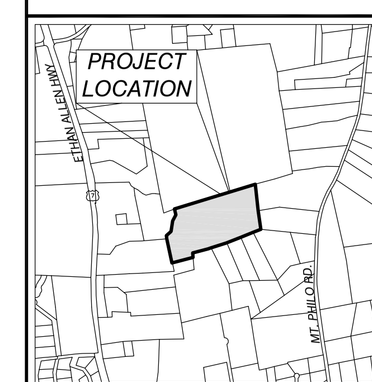

LOCATION MAP

1" = 2000'

DATE	CHECKED	REVISION

WASTEWATER DETAILS

DATE: FEB., 2013
SCALE: AS SHOWN
PROJ. NO.: 12196
DRAWING NUMBER: C2.1

P:\AutoCADD Projects\2012\12196\1-CADD Files - 12196\Dwg\12196-C.dwg, 3/15/2013 3:02:31 PM, jlarose