Soil Test Pits
Logged by Gunnar Olson (Summit Engineering, Inc.) accompanied by Ernie Christianson (ANR), Ward Preston (Operator), Clark Hinsdale Jr. (Developer), and Karen Whitby (Owner) on 12/13/05.

SHWT = Seasonal High Water Table
NLTD = No Ledge To Depth

TP #1 Depth 29"
0–12" Topsoil Typical, blocky structure
12"–29" Silt Loam, olive, blocky structure, plastic, friable
Few fine/faint mottles @ 16" to depth
Standing water @ 28"

TP #2 Depth 36"
0–10" Topsoil Typical, blocky structure
10"–36" Stony silt loam, olive, blocky structure, plastic, friable
Few medium/distinct mottles @ 10" to depth
Standing water @ 30"

TP #3 Depth 36"
0–12" Topsoil Typical, blocky structure
12"–36" Stony silt loam, olive, blocky structure, plastic, friable
Few medium/distinct mottles @ 12" to depth
Standing water @ 30"

TP #4 Depth 36"
0–9" Topsoil Typical, blocky structure
9"–36" Stony silt loam, olive, blocky structure, plastic, friable
Few fine/faint mottles @ 9" to depth
Standing water @ 34"

TP #5 Depth 48"
0–12" Topsoil Typical, blocky structure
12"–48" Stony silt loam, olive, blocky structure, plastic, friable
Few fine/faint mottles @ 12" to depth
Standing water @ 41"

TP #6 Depth 48"
0–16" Topsoil Typical, blocky structure
16"–48" Silt loam, olive, blocky structure, plastic, friable
Few fine/faint mottles @ 21" to depth
Standing water 41"

TP #7 Depth 42"
0–12" Topsoil Typical, blocky structure
12"–42" Stony silt loam, olive, blocky structure, plastic friable
Few fine/faint mottles @ 13" to depth
Standing water @ 36"
SHWT @ 13"
NLTD

TP #8 Depth 36"
0–13" Topsoil Typical, blocky structure
13"–36" Stony silt loam, olive, blocky structure, plastic friable
Few medium/distinct mottles @ 13" to depth
Standing water @ 36"
SHWT @ 13"
NLTD

TP #9 Depth 38"
0–12" Topsoil Typical, blocky structure
12"–38" Stony silt loam, olive, blocky structure, plastic friable
Few fine/faint mottles @ 17" to depth
Standing water @ 36"
SHWT @ 17"
NLTD

TP #10 Depth 36"
0–12" Topsoil Typical, blocky structure
12"–36" Silt loam, olive, blocky structure, plastic friable
Few fine/faint mottles @ 12" to depth
Standing water @ 36"
SHWT @ 12"
NLTD

Percolation Test by Gunnar Olson (Summit Engineering, Inc.) on 7/27/07.

PT 1
6.8 Min./In. @ 13"

PT 2
10.5 Min./In. @ 13"

Percolation Test by Pinkham Engineering Associates, Inc. on 6/24/86.

PT 242
30 Min./In. @ 24"

PT 243
34.3 Min./In. @ 24"

Soil Test Pits
Logged by Gunnar Olson (Summit Engineering, Inc.) accompanied by Spencer Harris (Town), Excavated by hand on 12/28/07.

TP #11 Depth 18"
0–10" Topsoil Typical, granular structure, wet
10"–18" Fine sandy loam w/3–5" stones, light brown (6/4 10YR), granular structure, friable, wet
Standing water @ 16"
No mottles observed
No ledge to 30" (Probe)

TP #12 Depth 18"
0–12" Topsoil Typical, granular structure, moist
12"–18" Fine sandy loam w/3–5" stones, light brown (6/4 10YR), granular structure, friable, wet
Standing water @ 18"
No mottles observed
No ledge to 30" (Probe)

TP #13 Depth 18"
0–10" Topsoil Typical, granular structure, wet
10"–18" Fine sandy loam, light brown (6/4 10YR), granular structure, friable, wet
Standing water @ 18"
No mottles observed
No ledge to 30" (Probe)

Soil Test Pits
Logged by Pinkham Engineering Associates, Inc., on 6/24/86.

TP #42 Depth 24"
0–6" Dark Brownish Sandy Silty Topsoil, Medium
6–24" Light Reddish Silty Sand w. Little Fine Gravel and a
Few Small Stones, Wet, Soft
(Water Seepage to about 23" Below Surface)
No Mottling, Fine Roots to 20"

TP #43 Depth 24"
0–8" Dark Brownish Sandy Silt Topsoil, Damp, Stiff
8"–24" Light Reddish Brown Silty Sand w/a Little Gravel, and
Some Small Stones and Cobbles, Damp, Medium
No Mottling, Fine Roots to 20"

DRILLED WELL MINIMUM SEPARATION DISTANCES

Disposal Fields – downhill of well	100'
Disposal Fields – uphill of well	200'
Driveway (<3 residences)	15'
Roadway or Parking Lot (outer edge of shoulder)	25'
Subsurface Wastewater Piping and Related Tanks	50'
Property Line	10'
Limit of Herbicide Application on Utility R.O.W.	50'
Surface Water	10'
Floodways	Well not located within floodway
Buildings	10'
Concentrated Livestock Holding Area & Manure Storage Systems	200'
Hazardous or Solid Waste Disposal Site	Contact Engineer
Non–sewage Wastewater Disposal Fields	Contact Engineer

Note: This table is intended as a general guideline only. Contact Engineer for specific limitations and applicability of these distances.

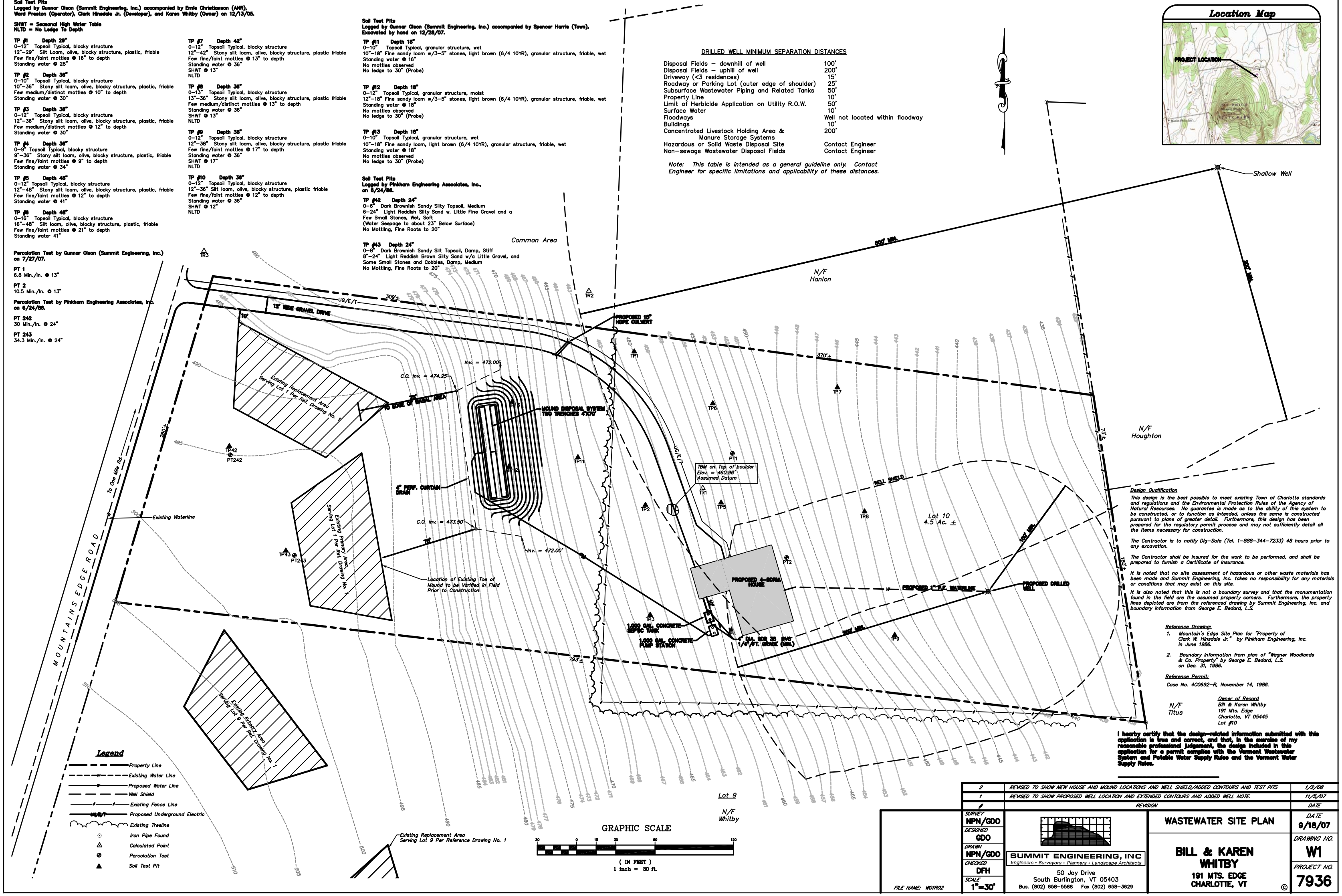

Design Qualification

This design is the best possible to meet existing Town of Charlotte standards and regulations and the Environmental Protection Rules of the Agency of Natural Resources. No guarantee is made as to the ability of this system to be constructed, or to function as intended, unless the same is constructed pursuant to plans of greater detail. Furthermore, this design has been prepared for the regulatory permit process and may not sufficiently detail all the items necessary for construction.

The Contractor is to notify Dig–Safe (Tel. 1–888–344–7233) 48 hours prior to any excavation.

The Contractor shall be insured for the work to be performed, and shall be prepared to furnish a Certificate of Insurance.

It is noted that no site assessment of hazardous or other waste materials has been made and Summit Engineering, Inc. takes no responsibility for any materials or conditions that may exist on this site.

It is also noted that this is not a boundary survey and that the monumentation found in the field are the assumed property corners. Furthermore, the property lines depicted are from the referenced drawing by Summit Engineering, Inc. and boundary information from George E. Bedard, L.S.

Reference Drawing:

1. *Mountain's Edge Site Plan for "Property of Clark W. Hinsdale Jr." by Pinkham Engineering, Inc. in June 1986.*
2. *Boundary information from plan of "Wagner Woodlands & Co. Property" by George E. Bedard, L.S. on Dec. 31, 1986.*

Reference Permit:

Case No. 4C0692–R, November 14, 1986.

Owner of Record
Bill & Karen Whitby
191 Mts. Edge
Charlotte, VT 05445
Lot #10

I hearby certify that the design–related information submitted with this application is true and correct, and that, in the exercise of my reasonable professional judgement, the design included in this application for a permit complies with the Vermont Wastewater System and Potable Water Supply Rules and the Vermont Water Supply Rules.

#	REVISION	DATE
2	REVISED TO SHOW NEW HOUSE AND MOUND LOCATIONS AND WELL SHIELD/ADDED CONTOURS AND TEST PITS	1/2/08
1	REVISED TO SHOW PROPOSED WELL LOCATION AND EXTENDED CONTOURS AND ADDED WELL NOTE.	11/5/07

SURVEY: NPN/GDO
DESIGNED: GDO
DRAWN: NPN/GDO
CHECKED: DFH
SCALE: 1"=30'

FILE NAME: W01R02

SUMMIT ENGINEERING, INC
Engineers • Surveyors • Planners • Landscape Architects
50 Joy Drive
South Burlington, VT 05403
Bus. (802) 658–5588 Fax (802) 658–3629

WASTEWATER SITE PLAN

BILL & KAREN WHITBY

191 MTS. EDGE
CHARLOTTE, VT

©

DATE: 9/18/07
DRAWING NO.: W1
PROJECT NO.: 7936

CONSTRUCTION PROCEDURES

Mound System

1. PRIOR TO ANY CONSTRUCTION, the owner shall notify the Design Engineer to stake out the area to be plowed and arrange for a meeting on-site with the Contractor to discuss construction procedures. Construction is to take place between April 1st and December 1st, provided there is no frost in the ground.

2. Remove all aboveground vegetation. Cut trees to the surface. DO NOT remove stumps. Prior to plowing, provide for diversion of surface water runoff from the mound area. Install delivery pipe to designed location and depth from pump station to point in mound where it connects to lateral.

3. When the area is sufficiently dry plow the entire area to be covered by the mound fill using a mold board plow, plowing parallel with the ground contours with the plow throwing soil uphill. Plow the maximum depth capable of the plow (7 to 8 inches), using as large a plow as possible to reduce the number of driven furrows which result in compaction of the subsoil. Be sure not to track on the plowed surface. Note: Plow soil only when the moisture content is low to avoid compaction and puddling. If a fragment of soil occurring approximately 9 inches below the surface can be easily rolled into a wire, the soil should not be plowed since the moisture content is too high. If, on the other hand, the soil is friable or dry and falls apart when rolling it into a wire, the soil can be plowed because the danger of causing compaction and puddling is minimal. Once compaction and puddling occurs, it reduces the ability of soil to accept water, thus increasing the chance of failure. Once plowing is complete, keep all vehicular traffic off the plowed area. Try to avoid the occurrence of a long period between plowing and construction. If it rains after plowing is completed, wait until the soil dries out before the start of filling operations. Immediate construction after plowing is highly preferable. Once the plowing is complete, the person constructing the system shall contact the Design Engineer for inspection of the site prior to placement of the fill.

4. Place the medium textured soil around the edge of the plowed area by dumping it on the plowed area, keeping the wheels of the dump truck off the plowed area. Percent of soil passing specified sieves shall be as noted below:

Sieve #	% Passing
No. 10	85 – 100%
No. 40	25 – 75%
No. 60	0 – 30%
No. 100	0 – 10%
No. 200	0 – 5%

The design engineer is to be supplied with a sieve analysis of the soil prior to placement.

5. Using a crawler tractor with a blade, move the sand around into place. Try to keep at least 6" of sand under the tracks to minimize compaction of the plowed layer.

6. Install and grade all the sand needed in the mound to the top of the trench. Shape the sides to the required slopes.

7. With the blade of the crawler, form the trench by moving along the length of the mound. The sand walls should stay sufficiently stable. Make sure the bottom of the trench is level. Some hand shovel leveling will be required.

8. Using a bucket on the crawler, dump the stone in the trench by traveling up the side slope. Level the stone off to the desired elevation.

9. At the location of the distribution pipe make a channel about 4" deep by using a shovel. Lay the distribution pipe in the stone taking care to lay it level with holes pointing upward. Install orifice shields over holes. Remove dips and rises which occur in the pipe. Place 2" of stone over the distribution pipe; connect delivery pipe from pump station to riser, and install the riser insulation.

10. Construct sewer line appurtenances.

11. Connect force main appurtenances and test system with clean water to insure that flow from any two holes does not differ by more than 10%. Notify engineer 24 hours prior to back filling and testing, so the system can be inspected and the testing observed by the Engineer. Some pipe sizes may need to be changed and the system rechecked until proper distribution pressure and uniformity is achieved.

12. Place filter fabric over the top of the trench.

13. Place 12" to 18" of soil over the top and sides of the fill material, and over additional area around the base of the mound, the top 4" being a topsoil able to grow grass. Shape the mound surface so there will be no standing water and surface water will drain off and away from the mound.

14. Immediately upon completion of final grading and prior to October 15th, landscape the mound by seeding the surface with grass seed as follows:

Mixture for Non-Manicured Areas	Mixture for Manicured Areas	
Birds foot Trefoil 90%	Bluegrass	60%
Timothy – 10%	Creeping Red Fescue	30%
	Annual Rye	10%

Do not place shrubs directly on top of the mound, as roots may interfere with the distribution system. Maw area annually. If system is completed after October 15th or before May 1st temporarily seed with Annual Rye Grass and mulch. After May 1st install permanent seed mixture.

BASIS OF DESIGN

Design Flows:

Proposed 4-bedroom house : 140 gpd/BR x 3 BR + 70 gpd each additional BR = 490 gpd

Septic Tanks:

House shall use a 1,000 gal. septic tank or equivalent, with baffles and set level. Effluent filter capable of filtering 1/8" particles and access riser to grade shall also be installed. Installation of a garbage grinder/disposal in any house is not recommended, but if installed, the septic tank capacity shall be a minimum of 2,000 gallons. Do not back flush water treatment systems into septic tanks, or any other part of the wastewater disposal system. Check septic tanks annually for solids accumulation and pump at least every 3 years.

1. Primary Area for Lot #1:

Use performance based mound disposal system designed to fit 12" to SHWT and include a curtain drain to dewater to 18" and include 18" of sand providing 36" from bottom elevation of leach field to SHWT.
Infiltration areas: use percolation rate of 10.5 min/in
Max. application rate = 1.0 gpd/sf
490 gpd / (1.0 gpd/sf) = 490 sf
Use two infiltration trenches, 4' wide x 70' long, providing 560 sf.
Min. effective Basal Area = 490 gpd/.74 gpd/sf = 662 sf
Under these conditions, the elevation of induced groundwater mounding has been calculated using Darcy's Law and a depth of 9" of naturally occurring unsaturated soil is maintained.

Orifice spacing:
Orifice spacing to provide a minimum of one opening per 25 SF of leach field area. Use 3/16" dia. orifices spaced 4'0" o.c. in two 2" diameter laterals for a total of 36 orifices.
Flow from the furthest orifice = .36 gpm.

Pressure distribution:
Dosing:
Minimum dose volume = 5 x volume distribution system
Minimum of 4 doses per day
= 5 x 23 Gallons
= 115 Gallons per dose (min.)
490 gpd / (115 gal/dose) = 4.2 doses per day
Use:
490 gpd / (122.5 gal/dose) = 4 doses per day

Discharge Rate:
Maintain 1.5 psi minimum distribution pressure.
Also, a minimum cleansing velocity in force main of 2.0 fps,
2.0 fps = 19.6 gpm minimum in 2" SCH 40 PVC.

Pump Station

Pump Design:
Must provide 490 gallons minimum emergency storage above alarm elevation.
Pump Station unit is designed to provide minimum 24 hour emergency storage.
Elevation Head = –2.8 ft
Force Main Friction = 1.2 ft
Miscellaneous Head Losses and End Pressure = 4.5 ft
Total Dynamic Head (TDH) = 5.0 ft
Design Flow Rate = 31.5 gpm

Pump Required: Use Orenco model PEF402 effluent pump, or equal

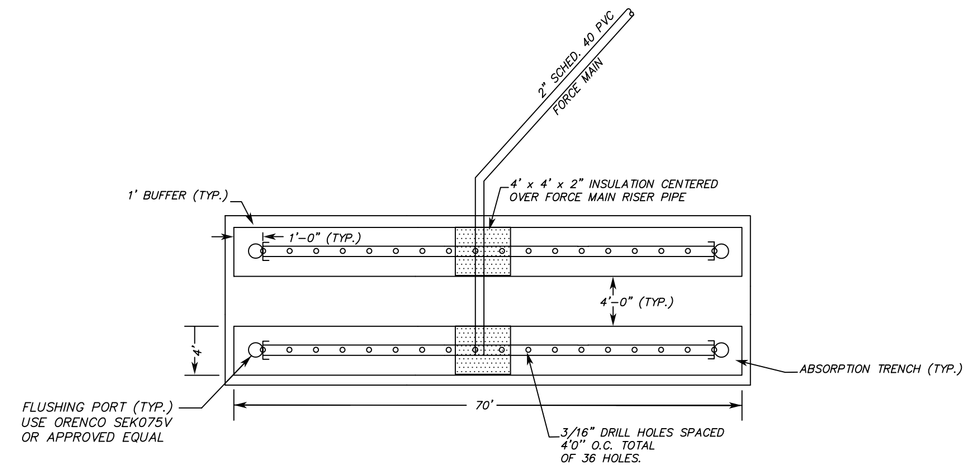

MOUND TRENCH PIPING DIAGRAM

N.T.S.

ELEVATION KEY

SEWER OUT	463.00'
SEPTIC TANK IN	462.75'
SEPTIC TANK OUT	462.50'
PUMP STATION UNIT IN	462.25'
PUMP "ON"	460.08'
PUMP "OFF"	459.58'
DISTRIBUTION LATERAL IN	456.75'

Elevations based on site benchmark with an assumed elevation of 460.96'.
Contact Designer for redesign if these, or any other specified elevations, are not used, or if tanks with different dimensions are used.
Contact Designer for redesign if replacement areas are needed.

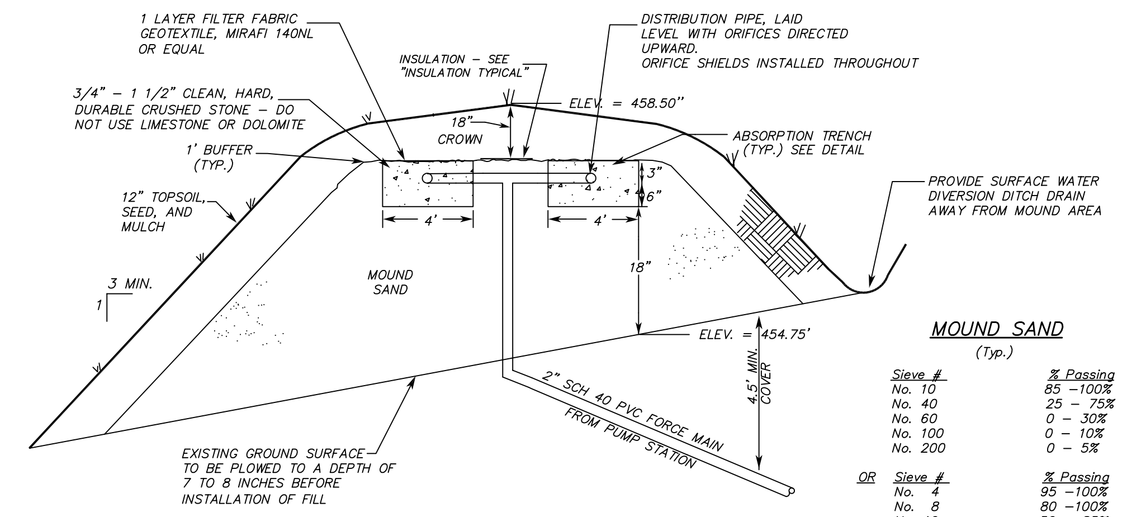

MOUND CROSS-SECTION

N.T.S.

MOUND SAND
(Typ.)

Sieve #	% Passing
No. 10	85 –100%
No. 40	25 – 75%
No. 60	0 – 30%
No. 100	0 – 10%
No. 200	0 – 5%

OR

Sieve #	% Passing
No. 4	95 –100%
No. 8	80 –100%
No. 16	50 – 85%
No. 30	25 – 60%
No. 50	10 – 30%
No. 100	2 – 10%

OR

Sieve #	% Passing
No. 10	85 –100%
No. 40	30 – 50%
No. 200	0 – 10%

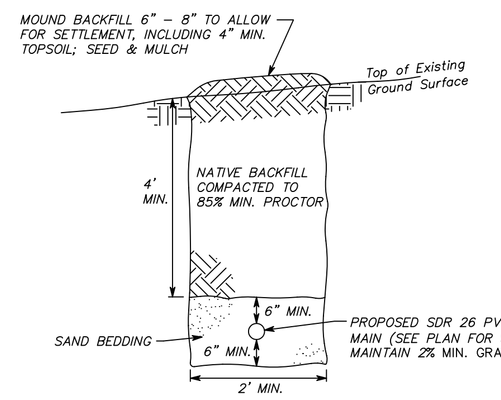

WHEN MINIMUM DEPTH CANNOT BE PROVIDED CONTRACTOR MAY BE PERMITTED TO REDUCE REQUIRED DEPTH BY UP TO TWO FEET; THIS WOULD REQUIRE THE INSTALLATION OF 4" THICK BY TRENCH WIDTH RIGID POLYSTRENE INSULATION (FOAMULAR 600, OR EQUAL), IMMEDIATELY OVER THE SAND BEDDING MATERIAL. CONTACT ENGINEER FOR ADDITIONAL INFORMATION.

FORCE MAIN TRENCH SECTION - GRASSED AREAS

N.T.S.

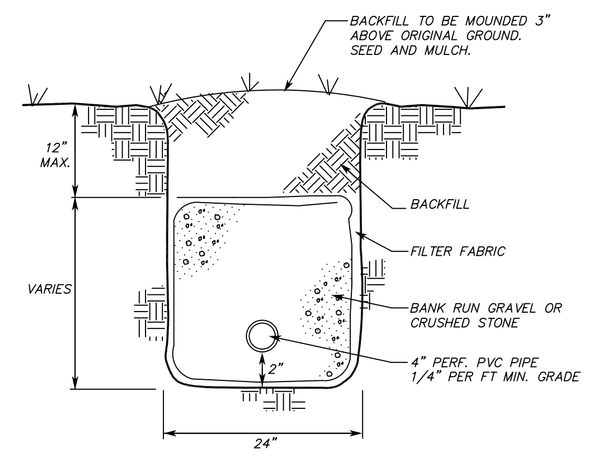

NOTE:
PROVIDE DRAINAGE SWALE AS NECESSARY ON UPHILL SIDE OF DRAIN. TYPICAL TO CHANGE TO SOLID PIPE WITH SUITABLE BACKFILL DOWN HILL OF TRENCHES.

CURTAIN DRAIN TYPICAL

N.T.S.

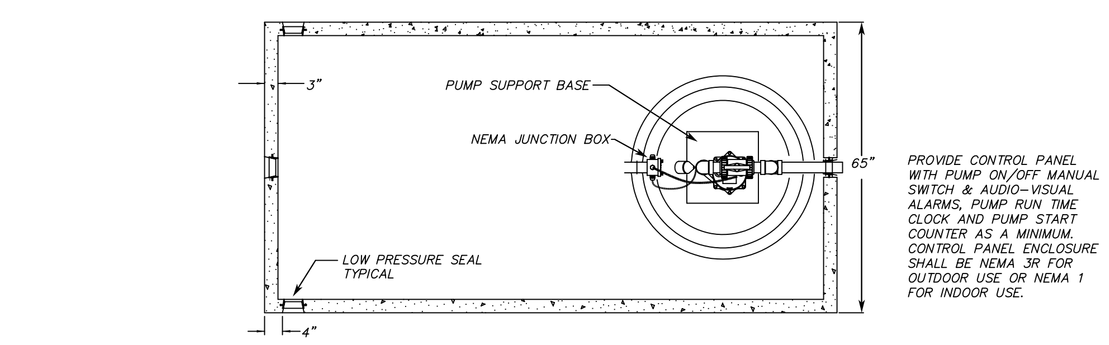

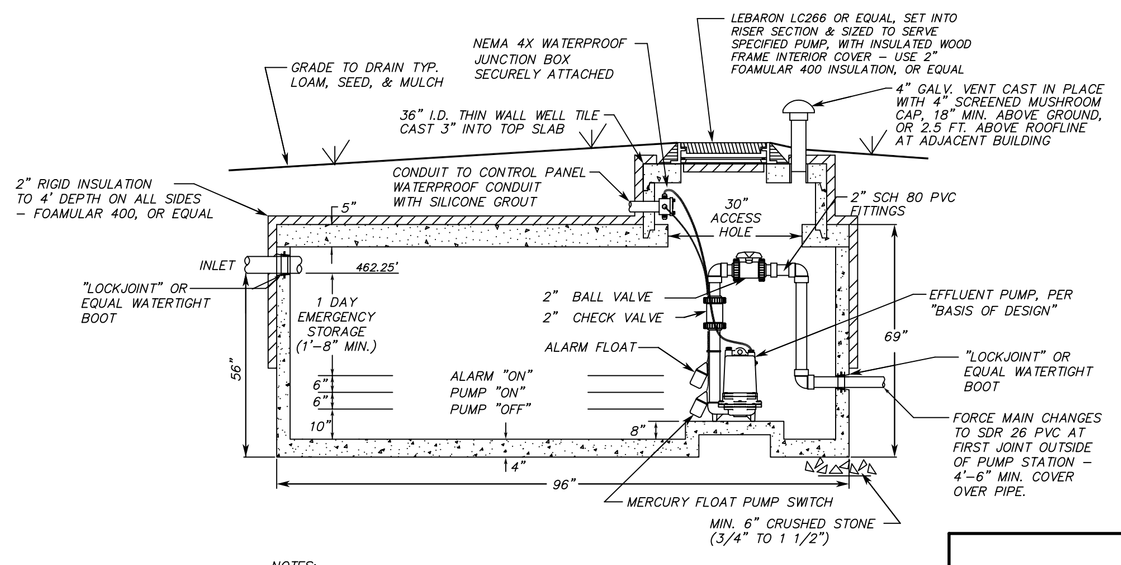

NOTES:
ALL PIPE AND FITTINGS IN PUMP STATION SHALL BE 2" SCH. 80 PVC SOLVENT WELD. USE PRECAST 1000 GAL. WATERPROOF CONCRETE TANK 58"W x 90"L x 62"H (ASSUMED INSIDE DIMENSIONS) MODIFIED FOR PUMP STATION USE. CONCRETE SHALL BE 4000 PSI @ 28 DAYS AND REINFORCED WITH WELDED WIRE FABRIC. ALL WIRING AND ELECTRICAL COMPONENTS SHALL BE INSTALLED BY A LICENSED ELECTRICIAN IN ACCORDANCE WITH THE NATIONAL ELECTRIC CODE. ACCESS RISER TO BE INSTALLED TO GRADE.

1,000 GALLON PUMP STATION

N.T.S.

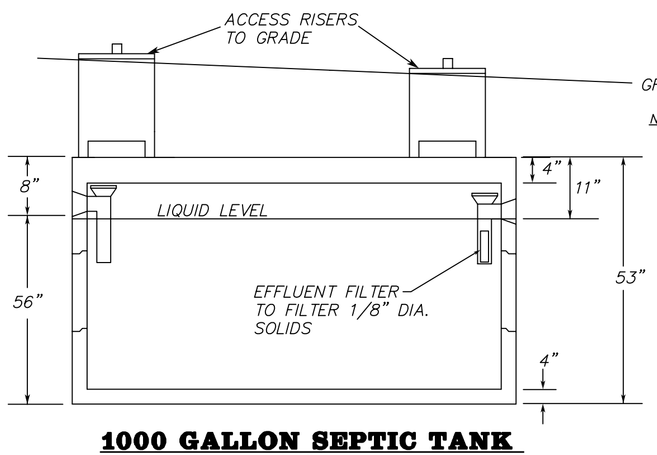

NOTES:
1. CONCRETE SHALL BE 4000 PSI @ 28 DAYS.
2. STEEL REINFORCEMENT SHALL COMPLY WITH ASTM SPECIFICATIONS.
3. LOW PRESSURE SEALS DESIGNED TO ACCEPT 4" C.I. OR PVC PIPE.
4. 4" THICK TOP AND BOTTOM, WALLS TAPER FROM 4" TO 3" THICK.
5. EXCAVATION MUST BE 1 FT. LONGER AND WIDER THAN THE TANK. PROVIDE 6" MIN. DEPTH GRAVEL BASE UNDER TANK.

1000 GALLON SEPTIC TANK

N.T.S.

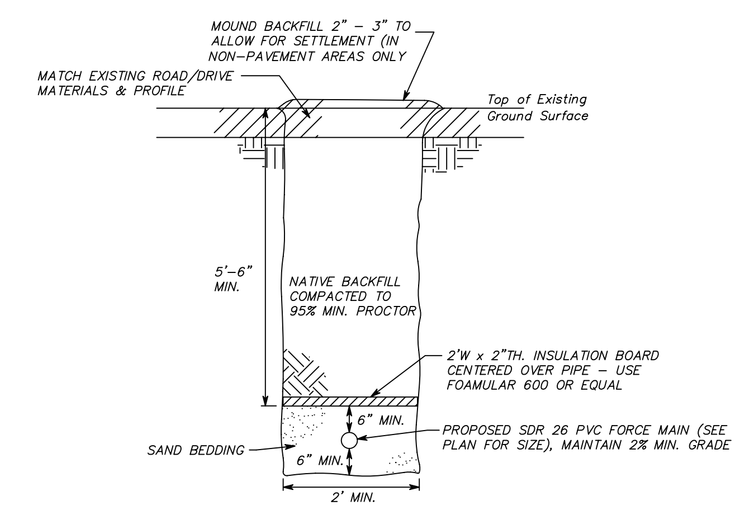

FORCE MAIN TRENCH SECTION - TRAFFIC AREAS

N.T.S.

FILE NAME: D01R00	SURVEY	SUMMIT ENGINEERING, INC Engineers • Surveyors • Planners • Landscape Architects 50 Joy Drive P.O. Box 2225 South Burlington, VT 05407-2225 Bus. (802) 658-5588 Fax (802) 658-3629	SEPTIC SYSTEM DETAILS	DATE 9/18/07
	DESIGNED GDO		BILL & KAREN WHITBY	DRAWING NO. D1
	DRAWN GDO		191 MTS. EDGE CHARLOTTE, VERMONT	PROJECT NO. 7936
	CHECKED DFH			
	SCALE AS SHOWN			

©