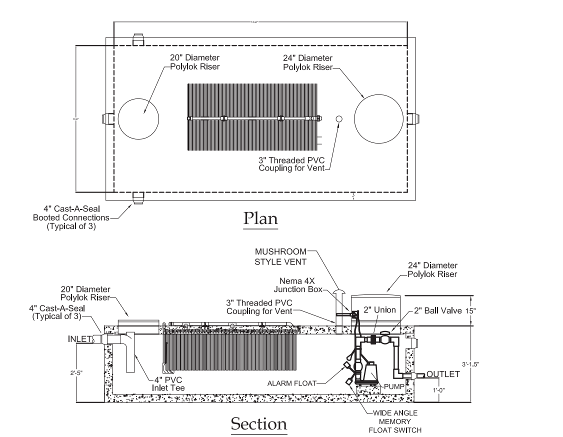

ADVANTEX AX20-RT PRETREATMENT SYSTEM

NOT TO SCALE

BIO-MICROBICS MicroFAST 0.5 L

NOT TO SCALE

1. 5000 PSI CONCRETE, 28 DAY STRENGTH.
2. LOW PRESSURE SEALS DESIGNED TO ACCEPT 4" C.I. OR PVC PIPE.
3. REQUIRES EFFLUENT PUMP CAPABLE OF PUMPING A MINIMUM OF 17.30 GPM VERSUS 8.91' TDH.
4. THE PUMP SHALL BE SETUP TO TIMEDOSE 2 MINUTES EVERY HOUR WITH A LOW LEVEL FLOAT 6" ABOVE PUMP INLET, A HIGH LEVEL FLOAT SET 18" ABOVE LOW LEVEL FLOAT, AND A HIGH LEVEL ALARM FLOAT 6" ABOVE THE HIGH LEVEL FLOAT.
5. IT SHOULD BE NOTED THAT ANY DEVIATION IN THE LOCATION OR ELEVATION OF THE SEPTIC TANK, PUMP STATION, OR THE DISPOSAL SYSTEM FROM THE DESIGNED LOCATION MAY REQUIRE A DIFFERENT SIZE PUMP.

SEPTIC TANK
OPERATION & MAINTENANCE RECOMMENDATIONS

1. THE SEPTIC TANK'S PURPOSE IS TO SETTLE OUT SOLIDS, CONTAIN THE SCUM AND PASS TREATED EFFLUENT. BACTERIA WITHIN THE SEPTIC TANK HELPS DECOMPOSE THE SOLIDS. SHOULD ANY SOLIDS PASS THROUGH THE SEPTIC TANK INTO THE SYSTEM, PREMATURE CLOGGING OF THE PIPING, STONE OR NATIVE SOIL BENEATH THE SYSTEM IS LIKELY TO OCCUR. ONLY HUMAN WASTES SHOULD ENTER THE SEWAGE SYSTEM, WATER USE SHOULD BE CONSERVATIVE AND CLEANING AGENTS CANNOT ENTER THE SYSTEM, AS THEY KILL BACTERIA.

2. THE STATE FLOW FIGURES OF 140 GAL/DAY/BEDROOM ARE BASED ON SHORT TERM PEAK USE PERIODS (I.E., DAILY EVENTS). ACTUAL FLOWS SHOULD AVERAGE 75-100 GALLONS PER DAY, PER BEDROOM.

3. ONCE PER YEAR, THE DEPTH OF SCUM AND SLUDGE IN THE SEPTIC TANK SHOULD BE MEASURED AND THE TANK SHALL BE PUMPED IF:

A. THE SLUDGE LEVEL IS WITHIN 12 INCHES OF THE BOTTOM OF THE OUTLET.

B. THE SCUM LAYER IS WITHIN 3 INCHES OF THE TOP OF THE OUTLET.

C. IF A OR B IS ANTICIPATED TO OCCUR PRIOR TO THE NEXT INSPECTION.

D. IN ANY CASE, THE TANK SHALL BE PUMPED AT A MAXIMUM 5 YEAR INTERVAL.

4. ONCE A YEAR, THE DISTRIBUTION BOX AND/OR PUMP STATION SHOULD BE INSPECTED AND ANY SETTLED SOLIDS REMOVED.

5. THE EFFLUENT FILTER SHOULD BE INSPECTED AND CLEANED ANNUALLY.

6. ABOVE ITEMS 1-5 ARE INTENDED TO PROLONG THE LIFE OF THE SYSTEM, NOT GUARANTEE IT.

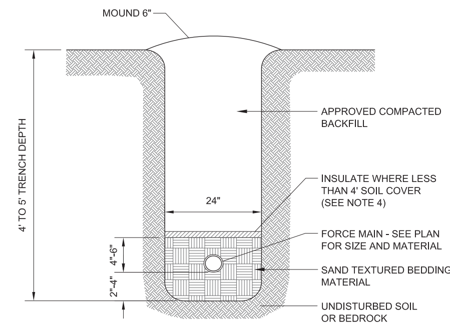

FORCE MAIN TRENCH NOTES:

1. BACKFILL AND BEDDING SHALL BE PROPERLY COMPACTED.
2. BEDDING MATERIAL SHALL NORMALLY CONSIST OF WELL-GRADED SANDS AND GRAVELS WITH A MAXIMUM SIZE OF 3/4".
3. BACKFILL SHALL NOT CONTAIN:
   - ANY STONES MORE THAN 12" (1 1/2" MAXIMUM DIAMETER WITHIN 2' OF THE OUTSIDE OF THE PIPE) IN THE LARGEST DIMENSION.
   - BE GREATER THAN 50 POUNDS.
   - CONTAIN ANY FROZEN, WET OR ORGANIC MATERIAL.
4. USE RIGID INSULATION AT THE RATE OF 1" FOR EVERY FOOT LESS THAN 4'.
5. FORCE MAIN MUST BE TESTED FOR LEAKAGE.
6. AT ANY CROSSING UNDER A ROAD OR DRIVE, FORCE MAIN IS TO BE ENCASED IN A 4" PVC SLEEVE. SAID SLEEVE IS TO EXTEND 8' IN EITHER DIRECTION FROM EDGE OF TRAVELED WAY.
7. THE SIDES OF THE TRENCHES 4' OR MORE IN DEPTH ENTERED BY PERSONNEL SHALL BE SHEETED OR SLOPED TO THE ANGLE OF REPOSE AS DEFINED BY O.S.H.A. STANDARDS.

FORCE MAIN TRENCH DETAIL

NOT TO SCALE

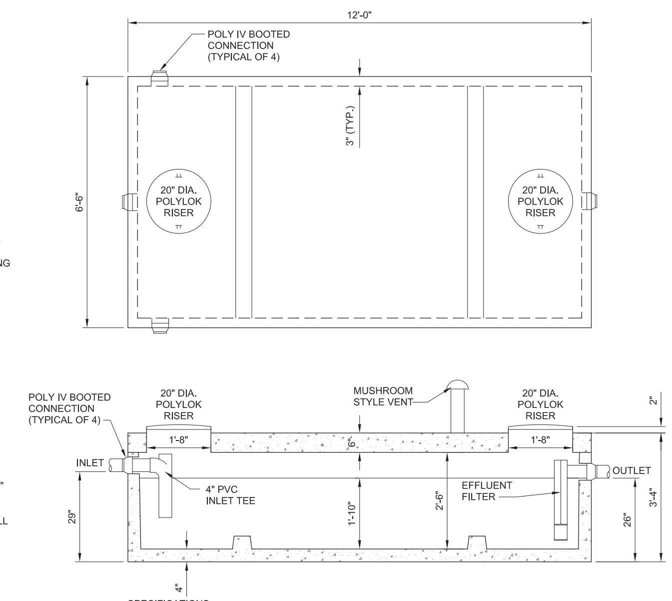

SPECIFICATIONS:
- Concrete Minimum Strength 5000psi @ 28 days
- Steel Reinforcement Grade 60
- Effluent Filter to be Field Installed by Contractor
- Top Seam Construction
- Water Tight to Top of Concrete
- Booted Pipe Connections
- Effluent Filter Alarm Available
- Weights Subject to Variation

1,000 GALLON PRECAST CONCRETE LEDGE TYPE SEPTIC TANK

NOT TO SCALE

ITEM	LEACHFIELD	SEPTIC TANK	SEWER
DRILLED WELL	(b)	50	50
GRAVEL PACK WELL, SHALLOW WELL OR SPRING	(b)	75	75
LAKES, PONDS AND IMPOUNDMENT'S	50	25	25
RIVER, STREAM	50	25	10
DRAINAGE SWALES, ROADWAY DITCHES	25	--	--
MAIN OR MUNICIPAL WATER LINES	50	50	(d)
SEWER SERVICE LINES	25	25	(d)
ROADWAYS, DRIVEWAYS, PARKING LOTS	10	5	(c)
TOP OF EMBANKMENT, OR SLOPE > 30%	25	10	--
PROPERTY LINE	25[1]	10	10
TREES	10	10	10
OTHER DISPOSAL FIELD OR REPLACEMENT AREA	10[2]	--	--
FOUNDATION, FOOTING DRAINS, CURTAIN DRAINS	35[3]	10	--
PUBLIC COMMUNITY WATER SUPPLY (e)	(f)	(f)	(f)
SUCTION WATER LINE	100	50	50

THESE DISTANCES MAY BE REDUCED WHEN EVIDENT THAT THE DISTANCE IN UNNECESSARY TO PROTECT AN ITEM OR INCREASED IF NECESSARY TO PROVIDE ADEQUATE PROTECTION.

(a) ISOLATION DISTANCES APPLY REGARDLESS OF PROPERTY LINE AND OWNERSHIP.
(b) SEPARATION BETWEEN POTABLE WATER SUPPLIES AND LEACHFIELD'S SHALL BE DETERMINED BY METHODS IN THE VERMONT WATER AND SUPPLY RULE, APPENDIX 21-A, PART 11, 11.4.
(c) SEWERS UNDER ROADS, DRIVEWAYS OR PARKING LOTS MAY REQUIRE PROTECTIVE CONDUITS OR SLEEVES.
(d) SEPARATION OF PRESSURE WATER LINES CONSIDERED AS "SERVICE CONNECTIONS" AND SEWER LINES SHALL ADHERE TO THE VERMONT PLUMBING RULES. SEPARATION OF PRESSURE WATER LINES (CONSIDERED TO BE PART OF A PUBLIC WATER SYSTEM AS DEFINED BY THE VERMONT WATER SUPPLY RULE) AND SEWER LINES SHALL ADHERE TO THE REQUIREMENTS OF THE VERMONT WATER SUPPLY RULE.
(e) THIS REFERS TO PUBLIC COMMUNITY WATER SYSTEMS, AS DEFINED IN THE VERMONT WATER SUPPLY RULE.
(f) CONTACT DEPARTMENT OF ENVIRONMENTAL CONSERVATION'S WATER SUPPLY DIVISION, 103 SOUTH MAIN STREET, WATERBURY, VERMONT FOR ISOLATION DISTANCES RELATIVE TO PUBLIC COMMUNITY WATER SUPPLY.

WASTEWATER SYSTEM ISOLATION DISTANCES

STATE OF VERMONT MOUND SAND SPECIFICATIONS

Fill Material: The fill material from the natural soil plowed surface to the top of the trench or bed shall be sand texture with one of the following sieve analyses:

1.

Sieve Number	Opening (mm)	Percent Passing, by Weight
3/8	9.500	85 - 100
40	0.420	25 - 75
60	0.240	0 - 30
100	0.149	0 - 10
200	0.074	0 - 5

2.

Sieve Number	Opening (mm)	Percent Passing, by Weight
4	4.750	95 - 100
8	2.380	80 - 100
16	1.190	50 - 85
30	0.590	25 - 60
50	0.297	10 - 30
100	0.149	2 - 10

3.

Sieve Number	Opening (mm)	Percent Passing, by Weight
3/8	9.500	85 - 100
40	0.420	30 - 50
200	0.074	0 - 5

The material must meet specifications 1, 2, or 3. Interpolation of analyses is not permitted. Fill material 2 is ASTM Specification C-33 and is intended for manufactured material which must be used for Bottomless Sand Filters.

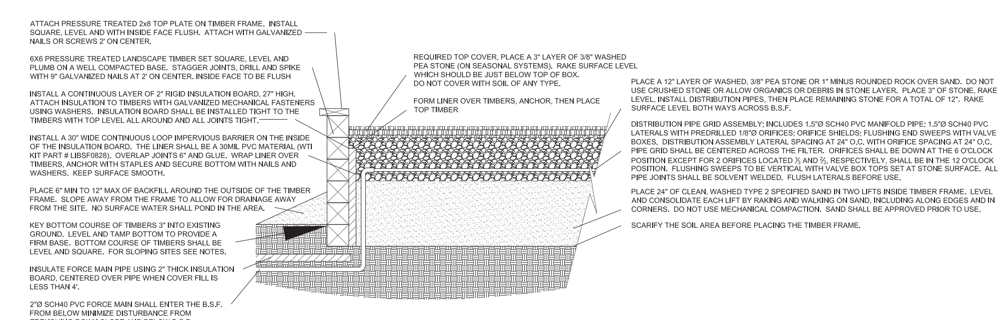

BOTTOMLESS SAND FILTER (BSF) - SECTION VIEW

NOT TO SCALE

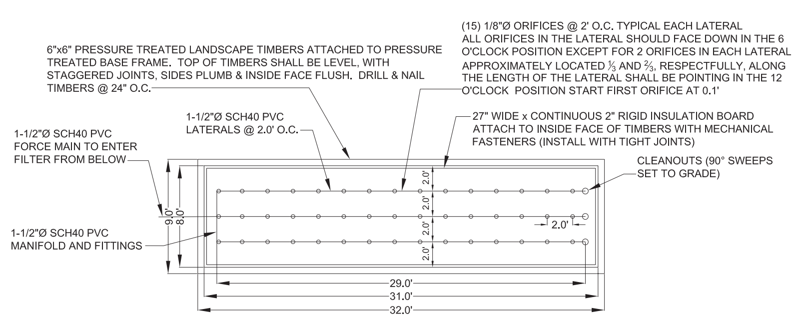

BOTTOMLESS SAND FILTER (BSF) - PLAN VIEW

NOT TO SCALE

SEWAGE DESIGN INFORMATION

1. THE SEWAGE DISPOSAL SYSTEM SHALL BE CONSTRUCTED IN ACCORDANCE WITH APPLICABLE TOWN REGULATIONS AND THE VERMONT ENVIRONMENTAL PROTECTION RULES.

2. THE FOLLOWING MINIMUM ISOLATION DISTANCES SHALL BE MAINTAINED FROM THE DISPOSAL AREA TO:

PROPERTY LINE	25 FEET
BUILDING (WITH FOOTING DRAIN) UPSLOPE OR SIDESLOPE	35 FEET
BUILDING (WITH FOOTING DRAIN) DOWNSLOPE	75 FEET
DRIVEWAYS & PARKING LOTS	10 FEET
TREES	10 FEET

3. BASIS OF DESIGN:

NO. OF BEDROOMS	4
DESIGN FLOW	490
PERCOLATION RATE	<60 MIN/INCH
LOADING RATE, Q (TRENCHES)	2.0 GAL/SF/DAY - 6" OF STONE

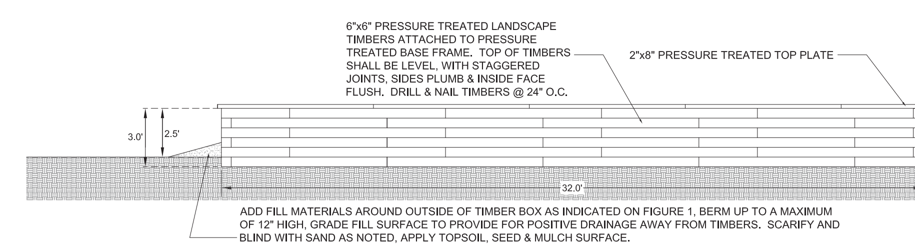

ADD FILL MATERIALS AROUND OUTSIDE OF TIMBER BOX AS INDICATED ON FIGURE 1, BERM UP TO A MAXIMUM OF 12" HIGH, GRADE FILL SURFACE TO PROVIDE FOR POSITIVE DRAINAGE AWAY FROM TIMBERS. SCARIFY AND BLIND WITH SAND AS NOTED, APPLY TOPSOIL, SEED & MULCH SURFACE.

BOTTOMLESS SAND FILTER (BSF) - ELEVATION VIEW

NOT TO SCALE

NOT TO SCALE

THE CONTRACTOR SHALL NOTIFY "DIGSAFE" AT 1-888-DIG-SAFE PRIOR TO ANY EXCAVATION.

"I hereby certify that the design related information submitted with this application is true and correct, and that, in the exercise of my reasonable professional judgment, the "best-fix"design included in this application for a permit reasonably complies with the Vermont Wastewater System and Potable Water Supply Rules and the Vermont Water Supply Rules."

Nov. 4, 2015
Date

Tyler Maynard
Licensed Class B Designer #597

STATE OF VERMONT
TYLER MAYNARD
NO. 597-B
LICENSED DESIGNER

LINCOLN APPLIED GEOLOGY, INC.
ENVIRONMENTAL CONSULTANTS
163 Revell Drive
(802) 453-4384
Web : www.lagvt.com
Lincoln, Vermont 05443
(802) 453-5399 (fax)
E-Mail: lagvt@lagvt.com

Pease Property
125 Molly Henry Road
Charlotte, Vermont

Replacement Wastewater System Details

LAG PROJECT #: 15120
DATE: Nov. 4, 2015
SURVEYORS: TAM/DN
DRAWN BY: TAM
FIGURE #: 2