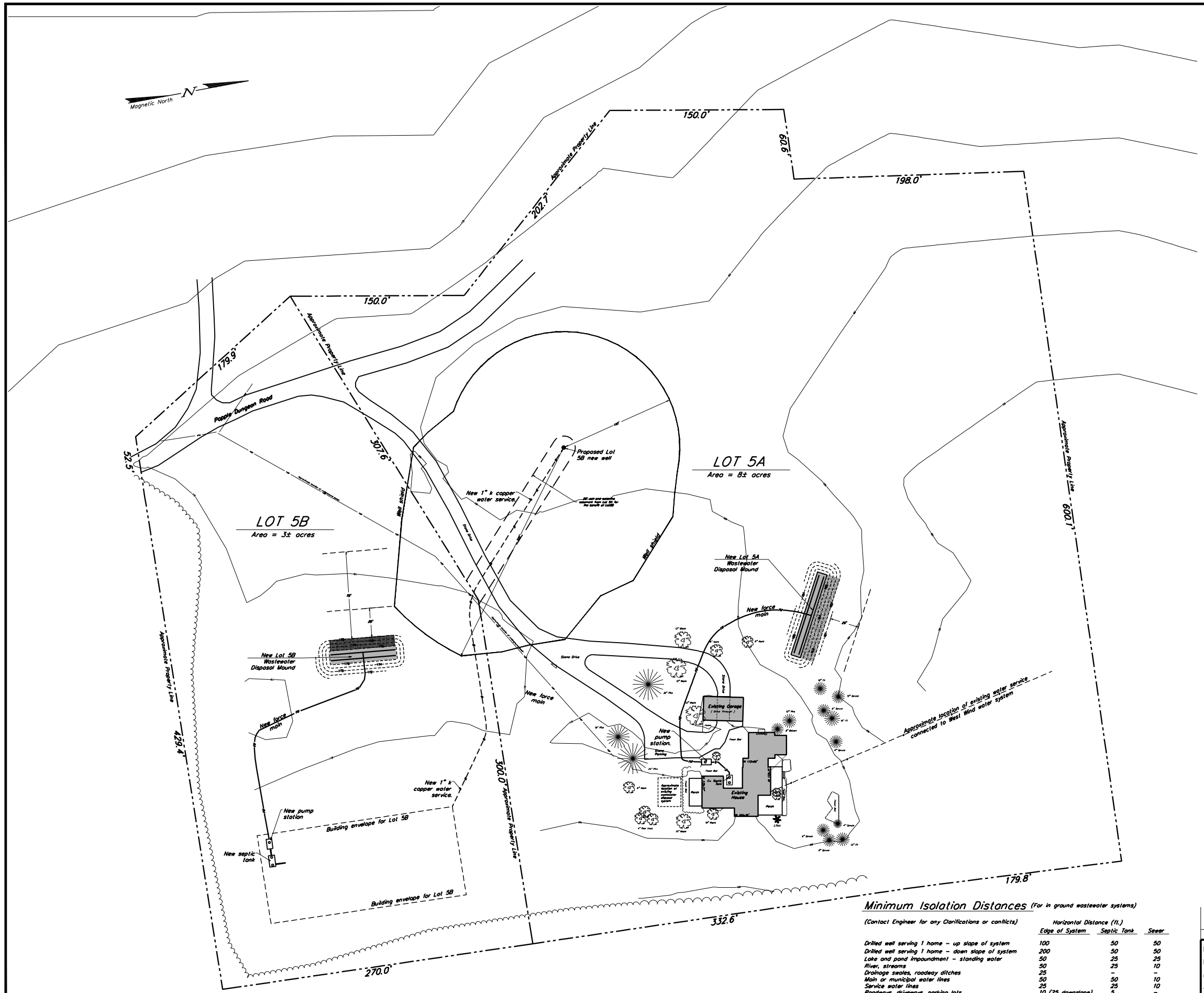

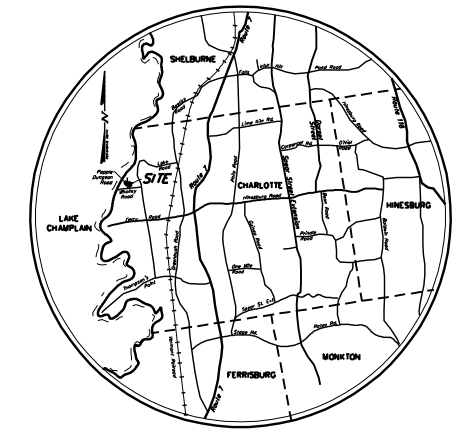

Location Map

N.T.S.

Notes

1. Orientation is based on Magnetic North.
2. An assumed project elevation was established using a Garmin E-Trex GPS as a Reference.
3. This plan was prepared without the benefit of DIG-SAFE. The location of underground utilities is now warranted to be exact or complete. Contact DIG-SAFE prior to any excavation.
4. This plan is in no way a boundary survey.

Legend

- Approximate property line
- Easement line
- Replacement wastewater area
- Primary wastewater area
- Existing water line
- New water line
- Edge of trees
- 202 Existing contour interval
- 202 Finish grade contour
- Approximate property line
- FM New force main

0' 20' 40' 80' 160' 240'

Bar Scale 1" = 40'

Minimum Isolation Distances (For in ground wastewater systems)

(Contact Engineer for any Clarifications or conflicts)

	Horizontal Distance (ft.)		
	Edge of System	Septic Tank	Sewer
Drilled well serving 1 home – up slope of system	100	50	50
Drilled well serving 1 home – down slope of system	200	50	50
Lake and pond impoundment – standing water	50	25	25
River, streams	50	25	10
Drainage swales, roadway ditches	25	–	–
Main or municipal water lines	50	50	10
Service water lines	25	25	10
Roadways, driveways, parking lots	10 (25 downslope)	5	–
Top of embankment or slope > 30%	25	10	–
Property line	25	10	10
Trees	10	10	10
Other disposal field or replacement area	10	–	–
Foundation, footing drains, curtain drains	35 (75 downslope)	10	–
Suction water line	100	50	50

Note:
These distances may be increased if necessary to provide adequate protection.

Date revised	Description	Checked	Date
August 25, 2009	systems reconfigured to eliminate replacement	swh	8/25/09
June 8, 2007	minimum isolation distances	swh	6/8/07

Design	SWH
Drawn	BHO/SWH
Checked	
Scale	1" = 40'
Date	April 17, 2007
Project	04189

Overall Plan

Mary Beth Olsen

(formerly Mary Beth Freeman)

Popple Dungeon Road Charlotte, Vermont

KREBS & LANSING Consulting Engineers, Inc.
164 Main Street, Colchester, Vermont 05446

File name ee-plan-08.dwg
Printing date FBK 385

1

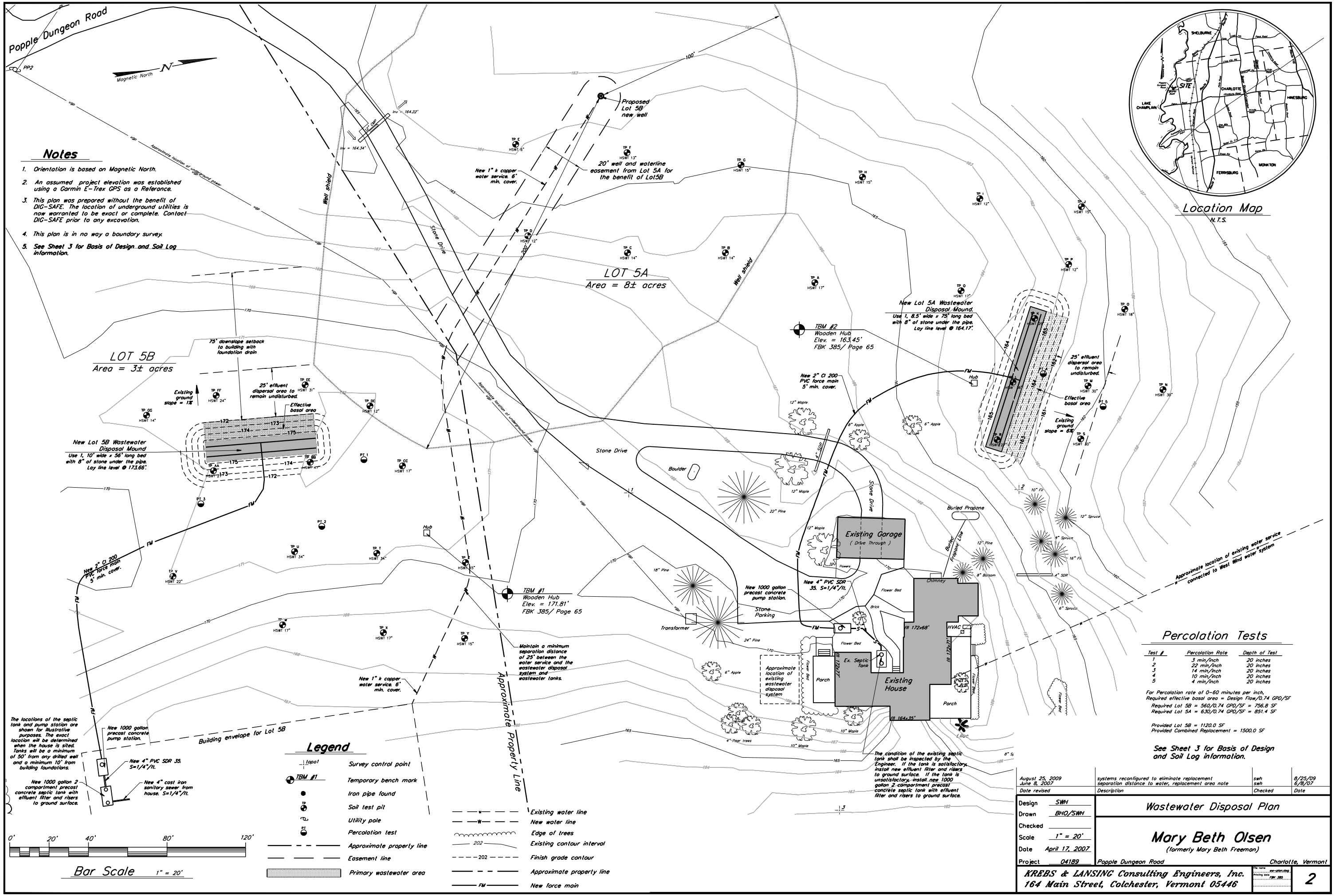

Percolation Tests

Test #	Percolation Rate	Depth of Test
1	3 min/inch	20 inches
2	22 min/inch	20 inches
3	14 min/inch	20 inches
4	10 min/inch	20 inches
5	4 min/inch	20 inches

For Percolation rate of 0-60 minutes per inch,
Required effective basal area = Design Flow/0.74 GPD/SF
Required Lot 5B = 560/0.74 GPD/SF = 756.8 SF
Required Lot 5A = 630/0.74 GPD/SF = 851.4 SF

Provided Lot 5B = 1120.0 SF
Provided Combined Replacement = 1500.0 SF

See Sheet 3 for Basis of Design and Soil Log information.

Date revised	Description	Checked	Date
August 25, 2009	systems reconfigured to eliminate replacement	swh	8/25/09
June 8, 2007	separation distance to water, replacement area note	swh	6/8/07

Design SWH
Drawn BHO/SWH
Checked
Scale 1" = 20'
Date April 17, 2007
Project 04189

Wastewater Disposal Plan

Mary Beth Olsen
(formerly Mary Beth Freeman)

Popple Dungeon Road — Charlotte, Vermont

KREBS & LANSING Consulting Engineers, Inc.
164 Main Street, Colchester, Vermont 05446

File name: ew-plan.dwg
Plotting date: FBK 385

2

Basis of Design – Lot 5B
560 Gallon/Day Mound System

Design Flow:

For 5 bedroom house:
- 3 bedroom house x 140 G.P.D./bedroom + 2 bedrooms x 70 G.P.D./bedroom = 560 G.P.D.

Application Rate:
- For mound system, application rate, 0 = 1.0 gals/s.f./day

Required Leach Area:
- Area required = $\frac{560\ GPD}{1.0}$ = 560 s.f.
- Use 10' wide bed
- Required trench length = $\frac{560\ s.f.}{10\ ft.}$ = 56 ft. min.
- Use 1, 10 wide x 56' long trench for 5 bedroom system

Septic Tank & Pump Station:
- Use 1000 gallon, 2 compartment precast concrete septic tank with outlet filter and risers to ground surface for each lot.
- Use 1000 gallon precast concrete simplex pump station.

Mound Elevation Information

System	Existing Ground	Bottom Stone	Pipe Inverts	Finish Grade
Lot 5B	172.0	173.0	173.67	175.0
Lot 5A	162.5	163.5	164.17	165.5

Basis of Design – Lot 5A
630 Gallon/Day Mound System

Design Flow:

For 6 bedroom house
- 3 bedroom house x 140 G.P.D./bedroom + 3 bedrooms x 70 G.P.D./bedroom = 630 G.P.D.

Application Rate:
- For mound system, application rate, 0 = 1.0 gals/s.f./day

Required Leach Area:
- Area required = $\frac{630\ GPD}{1.0}$ = 630 s.f.
- Use 8.5' wide bed
- Required trench length = $\frac{630\ s.f.}{8.5\ ft.}$ = 74.2 ft. min.
- Use 1, 8.5' wide x 75' long bed for 6 bedroom system

Septic Tank
- The condition of the existing septic tank shall be inspected by the Engineer. If the tank is satisfactory, install new effluent filter and risers to ground surface. If the tank is unsatisfactory, install new 1000 gallon 2 compartment precast concrete septic tank with effluent filter and risers to ground surface.
- Use 1000 gallon precast concrete simplex pump station.

Basis of Design – Potable Water Supply

Design Flows for Lot 5A – West Wind Water System Connection

The proposed basis of design for the potable water supply is designed for 3 bedrooms @ 140 G.P.D. + 3 bedrooms @ 70 G.P.D. = 630 G.P.D.

Design Flows for Lot 5B – New Drilled Well

The proposed basis of design for the potable water supply is designed for 3 bedrooms @ 140 G.P.D. + 2 bedrooms @ 70 G.P.D. = 560 G.P.D.

Soil Logs July 14, 2005

Engineer: Scott W. Homsted

Excavation Contractor: John Poinaude.

Others Present: Bill Zabilaski (State of Vermont)

NWTD = No water to depth
NLTD = No ledge to depth
HSWT = High seasonal water table

TH #A
0" – 13" dark brown loamy topsoil, roots, friable, dry
13"– 23" brown-orange silt loam, dry friable, fain mottles @ 17"
23"– 32" firm brown-black silt and weathered ledge
Ledge @ 32"
NWTD
HSWT assumed @ 17"

TH #B
0" – 8" dark brown loamy topsoil, roots, friable, dry
8"– 17" brown-orange silt loam, dry friable, fain mottles @ 14"
17"– 32" firm brown-black silt and weathered ledge
Ledge @ 32"
NWTD
HSWT assumed @ 14"

TH #C
0" – 8" dark brown loamy topsoil, roots, friable, dry
8"– 18" brown-gray silt loam, friable, dry, faint mottles @ 14"
18"– 24" firm brown-black silt and weathered ledge
Ledge @ 24"
NWTD
HSWT assumed @ 14"

TH #D
0" – 6" dark brown loamy topsoil, roots, friable, dry
6"– 14" brown-gray silt loam, friable, dry, faint mottles @ 12"
14"– 26" firm brown-black silt and weathered ledge
Ledge @ 26"
NWTD
HSWT assumed @ 12"

TH #E
0" – 6" brown-gray silt loam topsoil
6"– 24" brown-gray silt, slightly firm, damp, mottled
24"– 42" brown-gray clayey silt, firm, damp, mottled
Ledge @ 26"
NLWTD
HSWT assumed @ 6"

TH #F
0" – 6" brown-gray silt loam topsoil
6"– 13" light bron silt loam, friable, dry
13"– 30" brown-gray silt, slightly firm, damp, mottled
30"– 56" brown-gray clayey silt, firm, damp, mottled
Ledge @ 26"
NLWTD
HSWT assumed @ 13"

TH #G
0" – 9" dark brown loamy topsoil, roots, friable, dry
9"– 15" brown-orange silt loam, dry friable
15"– 35" brown-gray silt loam, friable to firm, mottled
Ledge @ 35"
NWTD
HSWT assumed @ 15"

TH #H
0" – 8" dark brown loamy topsoil, roots, friable, dry
8"– 15" brown-orange silt loam, dry friable
15"– 31" brown-gray silt loam, mottled
Ledge @ 31"
NWTD
HSWT assumed @ 15"

TH #I
0" – 8" dark brown loamy topsoil, roots, friable, dry
8"– 12" brown-orange silt loam, friable, dry, faint mottles @ 14"
12"– 25" firm brown-black silt and weathered ledge
Ledge @ 25"
NWTD
HSWT assumed @ 12"

TH #J
0" – 8" dark brown loamy topsoil, roots, friable, dry
8"– 15" brown-orange silt loam, friable, dry
15"– 27" firm brown-black silt and weathered ledge
Ledge @ 27"
NWTD
HSWT assumed @ 15"

TH #K
0" – 9" dark brown loamy topsoil, roots, friable, dry
9"– 29" brown-black sandy loam, many stones, shells
29"– weathered ledge
NWTD
HSWT assumed @ 29"

TH #L
0" – 6" dark brown loamy topsoil, roots, friable, dry
6"– 15" brown sandy loam, loose, dry
15"– 36" brown-black sandy loam, many stones, shells
36"– weathered ledge
NWTD
HSWT assumed @ 36"

TH #M
0" – 4" dark brown loamy topsoil, roots, friable, dry
4"– 16" brown sandy loam, loose, dry
16"– 38" brown-black sandy loam, many stones, shells
weathered ledge @ 30"
NWTD
HSWT assumed @ 30"

TH #N
–13" to ledge

TH #O
–18" to ledge (on upslope side)

TH #P
–12" to ledge

TH #Q
0" – 10" dark brown loamy topsoil, roots, friable, dry
10"– 17" brown-orange silt loam, friable, dry
17"– 34" firm brown-black silt loam, weathered ledge @ 24"
Ledge @ 34"
NWTD
HSWT assumed @ 17"

TH #R
0" – 2" dark brown loamy topsoil, roots, friable, dry
2"– 16" brown-orange silt loam, friable, dry
16"– 31" brown-black sandy loam, many stones, shells
weathered ledge @ 27"
NWTD
HSWT assumed @ 27"

TH #S
0" – 10" dark brown loamy topsoil, roots, friable, dry
10"– 17" brown-orange silt loam, friable, dry
17"– 36" brown-black sandy loam, many stones, shells
weathered ledge @ 25"
NWTD
HSWT assumed @ 30"

TH #T
0" – 9" dark brown loamy topsoil, roots, friable, dry
9"– 20" brown-orange silt loam, friable, dry
20"– 34" brown-black sandy loam, many stones
34"– 48" brown silt loam, mottled, dry, friable
NLWTD
HSWT assumed @ 34"

TH #U
0" – 3" dark brown loamy topsoil, roots, friable, dry
3"– 14" brown-orange silt loam, friable, dry
14"– 31" brown-black sandy loam, many stones
31"– 40" brown-black sandy loam, many stones and weathered ledge
NWTD
HSWT assumed @ 31"

TH #V
0" – 8" dark brown loamy topsoil, roots, friable, dry
8"– 29" brown-black sandy loam, many stones, mottled @ 22"
31"– 40" wet silt loam, mottled, ledge @ 36"
NWTD
HSWT assumed @ 22"

TH #W
0" – 8" dark brown loamy topsoil, roots, friable, dry
8"– 21" brown-orange silt loam, friable, dry, faint mottles @ 17"
Ledge @ 21"
NWTD
HSWT assumed @ 17"

TH #X
0" – 8" dark brown loamy topsoil, roots, friable, dry
8"– 21" brown-orange silt loam, friable, dry, faint mottles @ 17"
21"– 31" brown-black silt loam with weathered ledge
Ledge @ 31"
NWTD
HSWT assumed @ 17"

TH #Y
0" – 10" dark brown loamy topsoil, roots, friable, dry
10"– 19" brown-orange silt loam, friable, dry, faint mottles @ 15"
19"– 29" brown-black silt loam with weathered ledge
Ledge @ 29"
NWTD
HSWT assumed @ 15"

TH #Z
0" – 8" dark brown loamy topsoil, roots, friable, dry
8"– 15" duller brown-orange silt loam, friable, dry
15"– 24" brown-black silt loam with weathered ledge
Ledge @ 24"
NWTD
HSWT assumed @ 15"

TH #AA
0" – 8" dark brown loamy topsoil, roots, friable, dry
8"– 18" brown-orange silt loam, friable, dry
18"– 27" brown-black sandy loam, many stones
27"– 42" brown silt loam, mottled, dry, friable
NLWTD
HSWT assumed @ 27"

TH #BB
0" – 3" dark brown loamy topsoil, roots, friable, dry
3"– 12" brown-orange silt loam, friable, dry
12"– 47" brown-black sandy loam, many stones
NLWTD
HSWT assumed @ 47"

TH #CC
0" – 10" dark brown loamy topsoil, roots, friable, dry
10"– 20" brown-orange silt loam, friable, dry, faint mottles @ 17"
20"– 35" gray silt loam, many stones, ledge @ 35"
NWTD
HSWT assumed @ 17"

TH #DD
0" – 8" dark brown loamy topsoil, roots, friable, dry
8"– 15" brown-orange silt loam, friable, dry, faint mottles @ 12"
15"– 18" brown silt loam, mottled, dry, friable, ledge @ 18"
NLTD
HSWT assumed @ 12"

TH #EE
0" – 8" dark brown loamy topsoil, roots, friable, dry
8"– 18" brown-orange silt loam, friable, dry
18"– 27" brown-black sandy loam, many stones
27"– 42" brown silt loam, mottled, dry, friable
NLWTD
HSWT assumed @ 31"

TH #FF
0" – 8" dark brown loamy topsoil, roots, friable, dry
8"– 25" brown-orange silt loam, friable, dry, mottled 24"
25"– 30" brown silt loam, mottled, dry, friable
NLWTD
HSWT assumed @ 24"

TH #GG
0" – 6" dark brown loamy topsoil, roots, friable, dry
6"– 16" brown-orange silt loam, friable, dry, mottled 14"
16"– 31" brown silt loam, mottled, dry, friable
NLWTD
HSWT assumed @ 14"

Date revised	Description	Checked	Date
August 25, 2009	systems reconfigured to eliminate replacement	swh	8/25/09

Design SWH
Drawn SWH
Checked
Scale 1" = 20'
Date April 17, 2007
Project 04189

Wastewater Disposal Plan

Mary Beth Olsen
(formerly Mary Beth Freeman)

Popple Dungeon Road — Charlotte, Vermont

KREBS & LANSING Consulting Engineers, Inc.
164 Main Street, Colchester, Vermont 05446

File name: wwr-plan.dwg
Plotting date: Apr. 2007

Testing Notes – Mound System

1. The Contractor shall submit samples of stone and a sieve analysis of any sand required for Engineer's approval before construction begins.

2. The Contractor shall notify the Engineer 24 hours in advance of the beginning of construction. Work shall not proceed during periods of prolonged rain, when frost is in the ground or when temperatures are below 32 degrees F.

3. The Engineer shall be present during the construction of the wastewater disposal system. All procedures shall be in accordance with the State of Vermont Environmental Protection Rules Section 1-517-F.

4. Upon completion of the distribution piping, the network shall be tested with clean water pumped from the pump station to demonstrate that the difference in the discharge rate between any two holes is less than 10%. The Contractor shall provide all materials for testing, including water and power.

5. Any defects in the construction or performance of the wastewater disposal system shall be corrected and retested by the Contractor at no additional expense to the Owner.

6. The Contractor shall leak test the new pump station and septic tank utilizing one of the following procedures:

   a) If groundwater is above any joint or penetration, the Contractor shall test the septic tank and pump station for infiltration. The test shall consist of observing the structures for any sign of infiltration for 2 hours with the sidewalls exposed. Any sign of infiltration shall be repaired from the outside with hydraulic cement in a manner approved by the Engineer. The Contractor shall then backfill the structures and provide anchorage against floatation and test an additional 24 hours.

   b) If groundwater is below the bottom of the tanks, the Contractor shall conduct a 24 hour exfiltration test with the sidewalls of the structure exposed. The Contractor shall be responsible for all anchorage against floatation. There shall be no infiltration or exfiltration.

   c) The Contractor shall provide all necessary manpower, materials and equipment for testing and shall notify the Engineer, the Town of Westford, and the Owner 24 hours in advance of testing. All re-testing and repairs, if needed, shall be provided by the Contractor at no expense to the Owner.

Mound Construction Procedure

1. The Contractor shall arrange a meeting at the site with the Engineer and a representative of the Town of Charlotte. This meeting shall occur before any construction can begin. The purpose of this meeting is to review the layout, construction methods, scheduling of construction and testing of the proposed septic system.

2. The site shall be cleared. All stumps shall be cut flush with the ground surface.

3. Install the force main and riser that will be in and under the above ground mound.

4. Plow the area to a depth of 7" to 8", parallel to the land contours with the plow throwing the soil uphill.

5. The approved mound sand (sieve analysis; 85% passing the No. 10 sieve, 30% to 50% passing the No. 40 sieve, and 5% to 10% passing the No. 200 sieve) shall be placed in the mound area. Work from the outside of the plowed area and drive equipment over the mound as little as possible. It is very important to avoid compacting the plowed native soil any more than is absolutely necessary. Bring fill to the elevation of the top of the trenches. Shape sideslopes as shown on the approved plans. Dig out the trenches (or bed). Pay close attention to keeping the trenches (or bed) level. Shape by hand if necessary.

6. Fill trenches (or bed) with approved stone. Bring stone to the elevation of the bottom of the distribution lines. Carefully level the stone.

7. Dry fit distribution lines. Drill holes and turn holes up for testing. The discharge from the holes in the distribution lines must be checked before the mound construction can proceed. Both the Engineer and a representative of the Town must be present for this test. The system must be pressurized with water. The discharge rate from each hole will be measured to ensure an even distribution of the effluent.

8. After the discharge test is complete and approved by both the Town and the Engineer add the remaining stone. The stone shall be a minimum of 2" over the top of the distribution lines.

9. Mirafi filter fabric shall be placed over the stone in the trenches.

10. Cover the mound (18" above the trenches in the center and 12" at the sides) with material that is less permeable than the mound sand. The top 4" of this material shall be topsoil.

11. The soil uphill of the mound shall be shaped to divert surface runoff away from the mound.

12. The entire mound construction area shall be seeded and mulched.

System Maintenance Notes

1. At least once a year, depth of sludge and scum in septic tanks should be measured. The tank should be pumped if: 1) The sludge is closer than (12") twelve inches to the outlet baffle: 2) The scum layer is closer than (3") three inches to septic tank outlet baffle. Following septic tank cleaning all interior surfaces shall be inspected for leaks and cracks.

2. At least once a year the pump station and tanks should be opened and settled solids removed as necessary and checked for leveliness. Thoroughly clean any components with solids buildup and check for source of solids.

3. Toxic or hazardous materials should, in general, not be disposed of in septic systems. These substances may pass through the system in an unaltered state and contaminate groundwater or remain in the septage and subsequently contaminate the soil.

4. A continuous log of inspections and observations shall be kept. The log shall note all cleaning and other required maintenance.

General Notes

1. The Contractor shall be responsible for the complete systems as shown and detailed.

2. The location of underground utilities is not warranted to be exact or complete. All blasting, off-site backfill, sheeting and shoring, dewatering, clearing and grubbing, erosion control, dust control, traffic control, grading and landscaping and all other incidentals shall be included as part of the required work.

3. Repair of all disturbed areas, grading, seeding, mulching, repair of roads and curbs, paving and other incidentals are included as part of the required work.

4. The methods and materials of construction shall conform to the Environmental Protection Rule specifications and shall be in conformance with all permits and approvals issued for this project.

5. All disturbed areas shall be loamed, seeded, mulched and maintained by the Contractor until permanent ground cover is established.

6. Once new subgrade is exposed, Contractor shall take every precaution to keep equipment off plowed area and to avoid compaction of the soil.

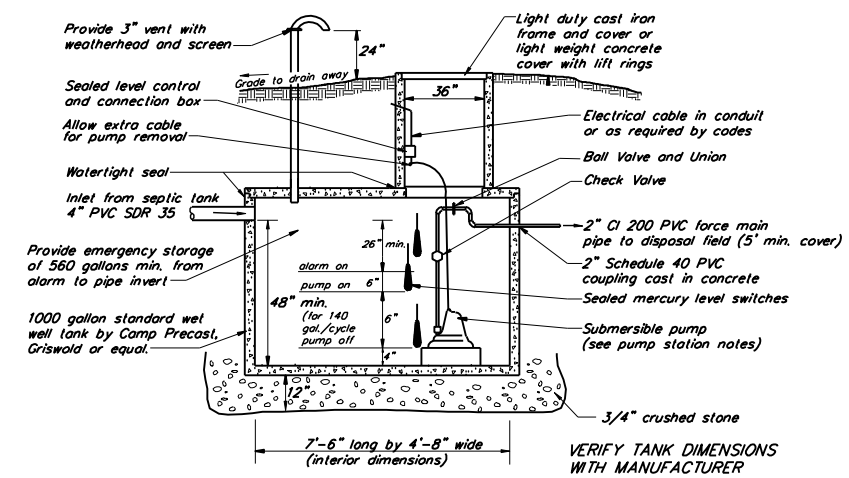

Lot 5B
560 GPD Pump Station
N.T.S.

Basis of Design

Lot 5B 560 GPD Pump Station

Design Q = 560 gal/day
Use 1000 gallon Pump Station
sump 5.0 feet high with 2.5 foot by 4.67 foot base
Volume of wetwell = 1310 gals
Volume of wetwell per foot = 1310 gals/5.0 feet = 262 gals/foot
4 pump cycles per day
Volume of pump cycles = 560 gals/4 cycles = 140 gals/cycle
Height of pump cycle = (140 gals)/(262 gals/foot) = 0.53 feet
Minimum volume of emergency storage = 560 gal (volume for 1 day)
Emergency storage will be in wetwell
Height of emergency storage = 560 gals/(262 gals/foot) = 2.14 feet

Dosing System Curves – Lot 5B

Flow	Static head	Friction loss	Discharge head	TDH	Force main velocity	Dose
20 gpm	13'	1.5'	2.3'	16.8'	1.7 ft/sec	140 gal
30 gpm	13'	3.0'	2.3'	18.3'	2.6 ft/sec	140 gal
40 gpm	13'	5.2'	2.3'	20.5'	3.5 ft/sec	140 gal
50 gpm	13'	7.8'	2.3'	23.1'	4.3 ft/sec	140 gal

Provide minimum 30 gpm @ 18.3' TDH. Verify Pump curve after house is sited on the lot.

Pump Station Notes

1. The Contractor shall test tank for watertightness prior to backfill and shall anchor tank as required due to high seasonal groundwater table.

2. All penetrations and joints on tank shall have watertight seals.

3. The Contractor shall provide all necessary unions, fittings, etc. for easy pump removal.

4. The pump station shall include all the necessary controls, switches, fittings and appurtenances to make the station complete.

5. The Contractor shall provide an audible and flashing alarm and fused disconnect switch to be installed inside house or building. All necessary cable and wiring shall be supplied by the Contractor.

6. Provide a 4" solid concrete block under pump.

7. The Contractor shall use Schedule 80 PVC with solvent weld joints for all piping inside pump station.

8. See lot information below for pump specifications.

9. All electrical equipment shall comply with the National Electric Code and other applicable codes.

10. Any modifications to pump station design or location must be approved by the Engineer.

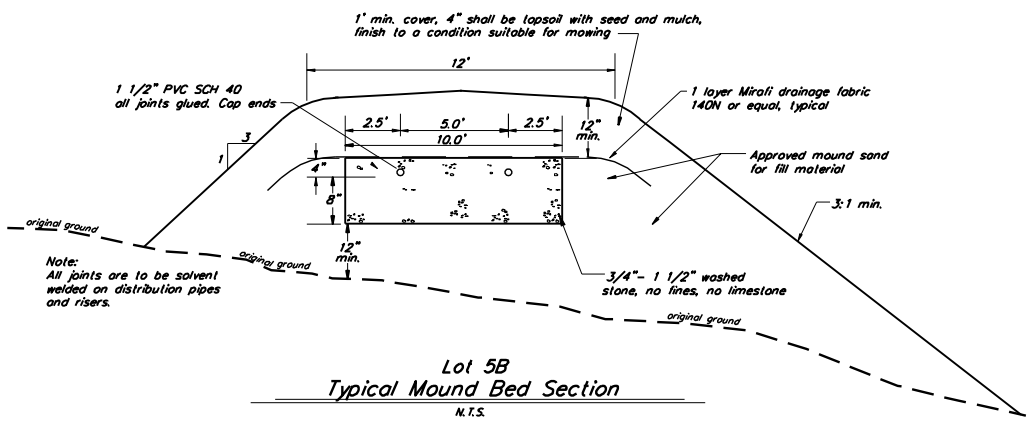

Lot 5B
Typical Mound Bed Section
N.T.S.

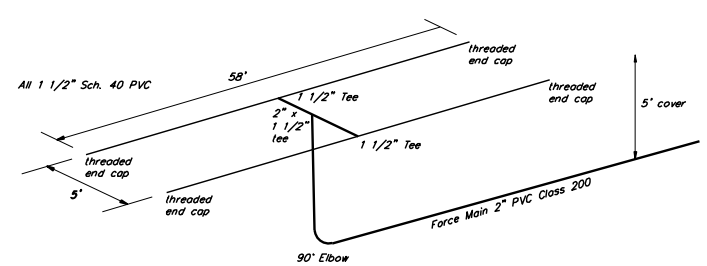

Lot 5B
Typical Pipe Layout
N.T.S.

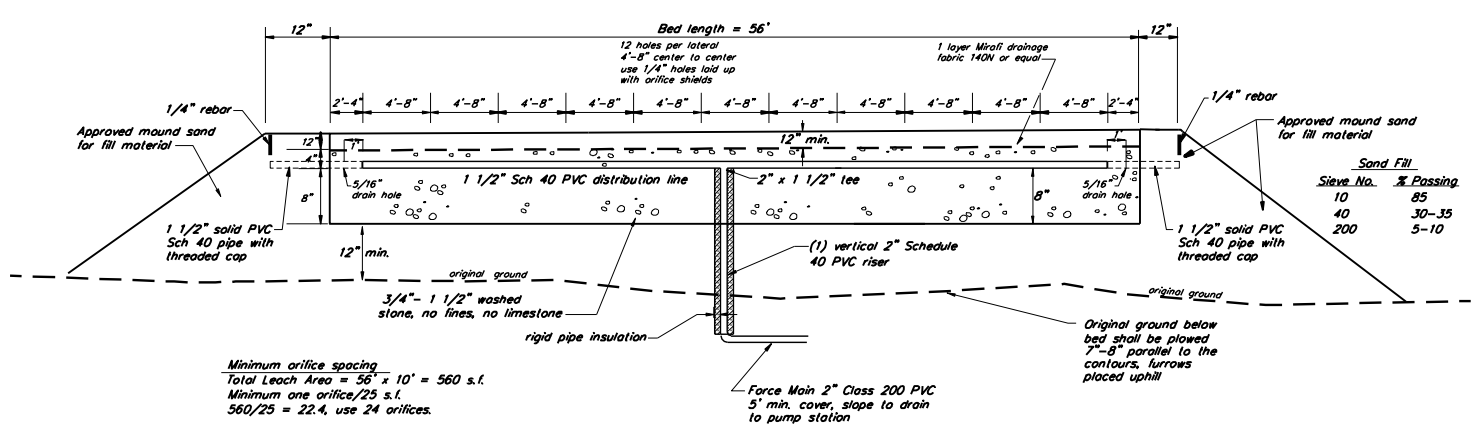

Lot 5B
Typical Distribution Lateral
N.T.S.

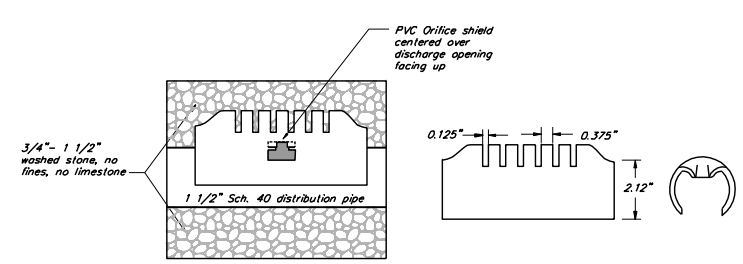

Typical Orifice Shield
N.T.S.

Date revised	Description	Checked	Date
August 25, 2009	systems reconfigured to eliminate replacement	swh	8/25/09

Design SWH
Drawn SWH
Checked
Scale n.t.s.
Date April 17, 2007
Project 04189

Wastewater Disposal Details

Mary Beth Olsen
(formerly Mary Beth Freeman)

Popple Dungeon Road — Charlotte, Vermont

KREBS & LANSING Consulting Engineers, Inc.
164 Main Street, Colchester, Vermont 05446

Pump Station Notes

1. The Contractor shall test tank for watertightness prior to backfill and shall anchor tank as required due to high seasonal groundwater table.
2. All penetrations and joints on tank shall have watertight seals.
3. The Contractor shall provide all necessary unions, fittings, etc. for easy pump removal.
4. The pump station shall include all the necessary controls, switches, fittings and appurtenances to make the station complete.
5. The Contractor shall provide an audible and flashing alarm and fused disconnect switch to be installed inside house or building. All necessary cable and wiring shall be supplied by the Contractor.
6. Provide a 4" solid concrete block under pump.
7. The Contractor shall use Schedule 80 PVC with solvent weld joints for all piping inside pump station.
8. See lot information below for pump specifications.
9. All electrical equipment shall comply with the National Electric Code and other applicable codes.
10. Any modifications to pump station design or location must be approved by the Engineer.

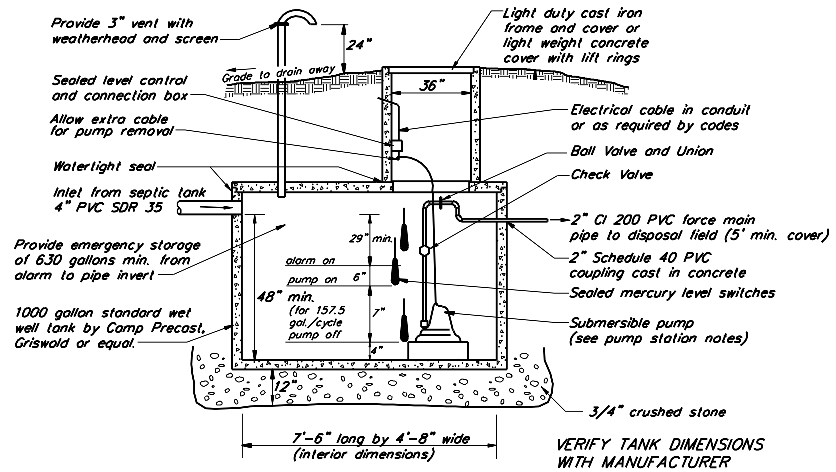

Lot 5A
630 GPD Pump Station
N.T.S.

Basis of Design

Lot 5A 630 GPD Pump Station

Design Q = 630 gal/day
Use 1000 gallon Pump Station
sump 5.0 feet high with 7.5 foot by 4.67 foot base
Volume of wetwell = 1310 gals
Volume of wetwell per foot = 1310 gals/5.0 feet = 262 gals/foot
4 pump cycles per day
Volume of pump cycles = 630 gals/4 cycles = 157.5 gals/cycle
Height of pump cycle = (157.5 gals)/(262 gals/foot) = 0.60 feet
Minimum volume of emergency storage = 630 gal (volume for 1 day)
Emergency storage will be in wetwell
Height of emergency storage = 630 gals/(262 gals/foot) = 2.40 feet

Dosing System Curves – Lot 5A

Flow	Static head	Friction loss	Discharge head	TDH	Force main velocity	Dose
20 gpm	2'	1.5'	2.3'	5.8'	1.7 ft/sec	157.5 gal
30 gpm	2'	3.0'	2.3'	7.3'	2.6 ft/sec	157.5 gal
40 gpm	2'	5.2'	2.3'	9.5'	3.5 ft/sec	157.5 gal
50 gpm	2'	7.8'	2.3'	12.1'	4.3 ft/sec	157.5 gal

Provide minimum 30 gpm @ 7.3' TDH.

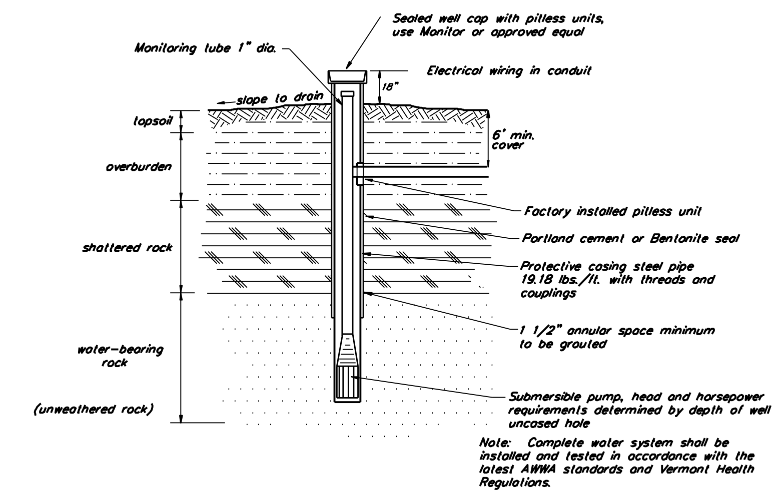

Typical Drilled Well Section
N.T.S.

Force Main Pressure/Leakage Test

Upon completion of construction of a force main, the line shall be pressure and leakage tested in accordance with the following procedure.

Pressure Test

After the pipe has been laid, all newly laid pipe or any valved section thereof shall be subjected to a hydrostatic pressure of at least 1.5 x the highest working pressure in the section.

Test Pressure Restrictions. Test pressures shall:

1. Not to be less than 50 psi at the highest point along the test section.
2. Not exceed pipe or thrust restraint design pressures.
3. Be of at least 2 hour duration.
4. Not vary by more than 5 psi.
5. Not exceed twice the rated pressure of the valves when the pressure boundary of the test section includes closed gate valves.

Pressurization. Each valved section of pipe shall be filled with water slowly and the specified test pressure, based on the elevation of the lowest point of the line or section under test and corrected to the elevation of the test gauge, shall be applied by means of a pump connected to the pipe.

Air Removal. Before applying the specified test pressure, air shall be expelled completely from the pipe and valves.

Examination. All exposed pipe, fittings, valves, and joints shall be examined carefully during the test. Any damaged or defective pipe, fittings, or valves, that are discovered following the pressure test shall be repaired or replaced with sound material and the test shall be repeated.

Leakage Test

A leakage test shall be conducted concurrently with the pressure test.

Leakage Defined. Leakage shall be defined as the quantity of water that must be supplied into the newly laid pipe, or any valved section thereof, to maintain pressure within 5 psi of the specified test pressure after the air in the pipeline has been expelled and the pipe has been filled with water.

Allowable Leakage. No pipe installation will be accepted if leakage is greater than that determined by the following formula:

$$L = \frac{N*D\sqrt{P}}{7400}$$

L is the allowable leakage, in gallons per hour; N is the number of joints in the length of pipeline tested; D is the nominal diameter of the pipe, in inches; and P is the average test pressure during the leakage test, in pounds per square inch gage.

Sections which fail the pressure/leakage test shall be repaired and retested by the contractor at no additional expense to the owner.

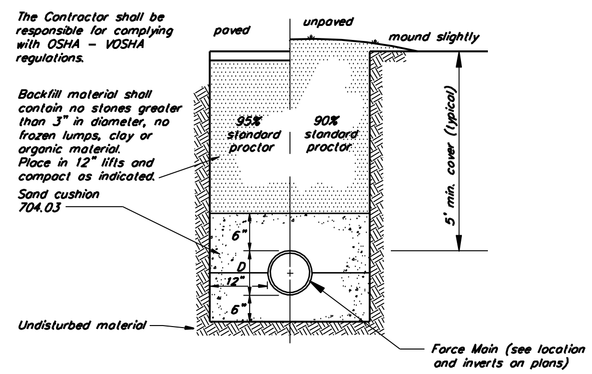

Force Main Trench Detail
N.T.S.

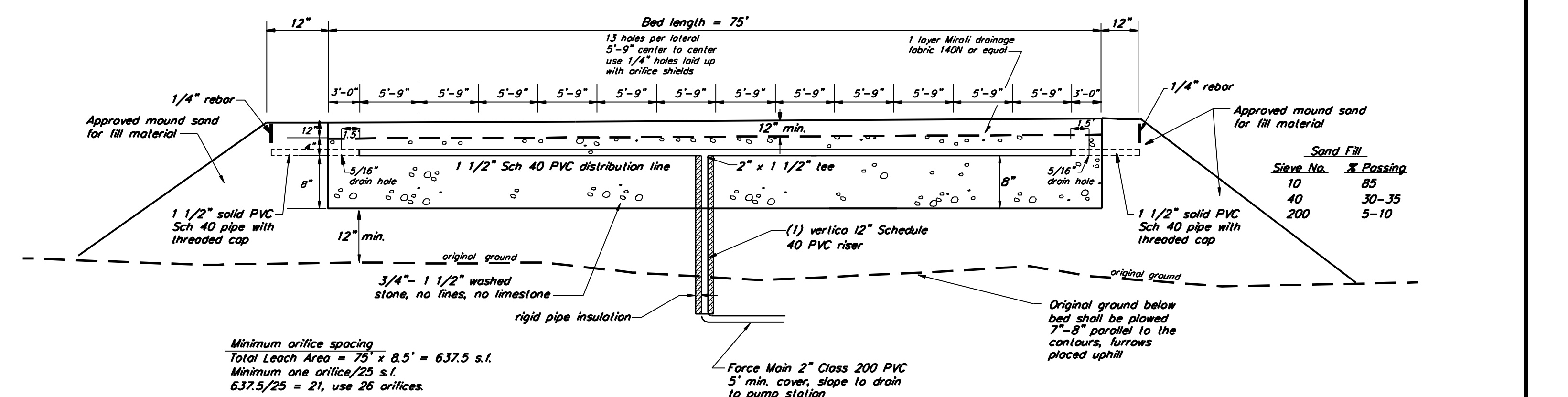

Minimum orifice spacing
Total Leach Area = 75' x 8.5' = 637.5 s.f.
Minimum one orifice/25 s.f.
637.5/25 = 21, use 26 orifices.

Lot 5A
Typical Distribution Lateral
N.T.S.

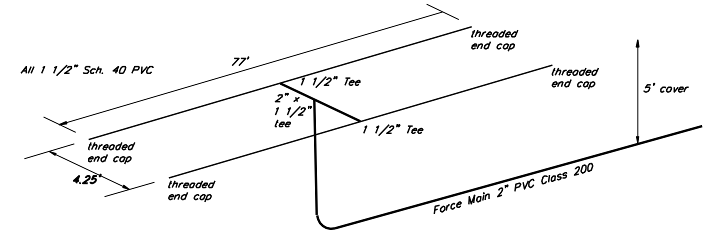

Lot 5A
Typical Pipe Layout
N.T.S.

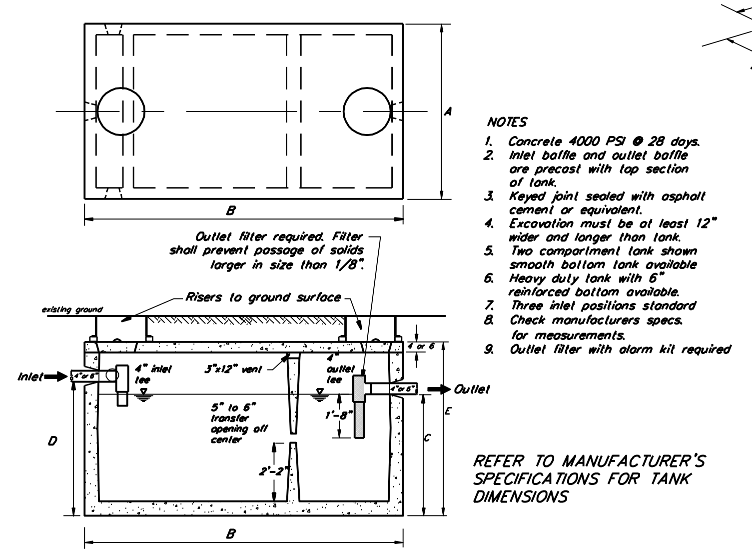

NOTES
1. Concrete 4000 PSI @ 28 days.
2. Inlet baffle and outlet baffle are precast with top section of tank.
3. Keyed joint sealed with asphalt cement or equivalent.
4. Excavation must be at least 12" wider and longer than tank.
5. Two compartment tank shown smooth bottom tank available
6. Heavy duty tank with 6" reinforced bottom available.
7. Three inlet positions standard
8. Check manufacturers specs. for measurements.
9. Outlet filter with alarm kit required

REFER TO MANUFACTURER'S SPECIFICATIONS FOR TANK DIMENSIONS

Typical Two Compartment 1000 Gallon Septic Tank
N.T.S.

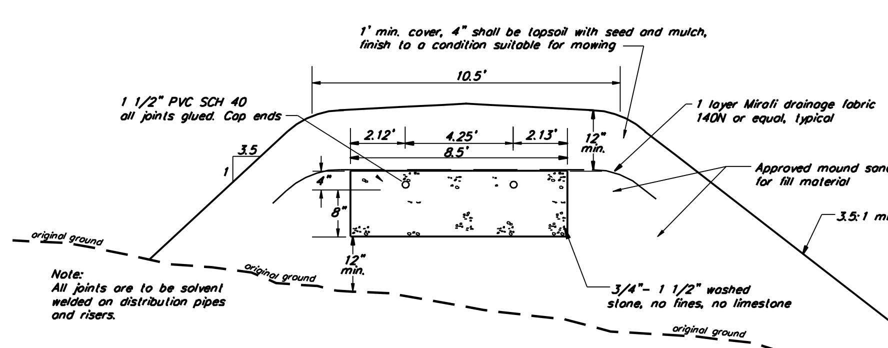

Lot 5A
Typical Mound Bed Section
N.T.S.

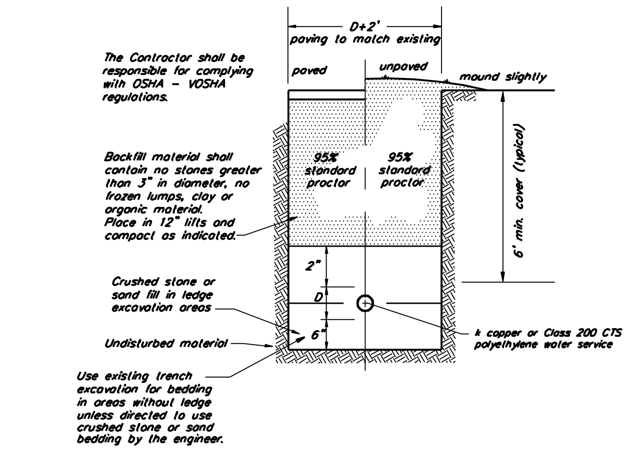

Typical Water Trench Details
N.T.S.

Date revised	Description	Checked	Date
August 25, 2009	systems reconfigured to eliminate replacement	swh	8/25/09
June 8, 2007	water trench	swh	6/8/07

Design SWH
Drawn SWH
Checked
Scale n.t.s.
Date April 17, 2007
Project 04189

Water & Wastewater Disposal Details

Mary Beth Olsen
(formerly Mary Beth Freeman)

Popple Dungeon Road — Charlotte, Vermont

KREBS & LANSING Consulting Engineers, Inc.
164 Main Street, Colchester, Vermont 05446

File name: [illegible]
Printing date: [illegible]

5