LAKE CHAMPLAIN

TOWN OF SHELBURNE
TOWN OF CHARLOTTE

ORDWAY SHORE

SOUTH FORTY ROAD

ORCHARD ROAD

TAMARACK ROAD

EXISTING WELL

NORTH

NEW 60' WIDE ROW

NEW 14' WIDE DRIVEWAY

NEW DRIVEWAY TO FOLLOW FIELD ROAD

NEW FIRE POND AND PULL OFF

NEW 14' WIDE DRIVEWAY

5
2.10 AC.

6
7.10 AC.

8
33.64 AC.

7
5.10 AC.

3
2.10 AC.

2
2.10 AC.

4
2.10 AC.

1
2.01 AC.

EX. PUMP STATION ELEV: 136.7'

WIDEN EXISTING DRIVEWAY TO 14'

NEW FIRE POND AND PULL OFF

WIDEN WEXFORD LANE TO 14'

WEST END OF WEXFORD LANE WIDEN TO 18'

INV.=154.96

12" CULVERT INV.=155.8

TAMARACK ROAD WIDENED TO 18'

PROPOSED COMMUNITY WASTEWATER DISPOSAL SYSTEM

PORTION OF EXISTING DRIVEWAY WIDENED TO 14'

NEW 14' ROADWAY TO FOLLOW EXISTING TRAIL

PROPERTY LINE TO BE EXTINGUISHED

PROPOSED BOUNDARY ADJUSTMENT

EXISTING WELL

LEGEND:

- DELINEATED WETLAND
- NON-DELINEATED WETLAND
- CLASS II WETLAND BUFFER
- 150 — EXISTING CONTOURS
- WOODS TRAIL
- EXISTING PROPERTY LINE
- PROPOSED PROPERTY LINE
- P.R.D. LIMITS
- EXISTING STREAM
- UP — EXISTING UG POWER
- OHP — EXISTING OVERHEAD POWER
- FM — PROPOSED SEWER FORCE MAIN
- FM — EXISTING SEWER FORCE MAIN
- EXISTING MONUMENT
- PROPERTY CORNER PIN
- PROPERTY CORNER PIN TO BE SET
- W-8 WETLAND NUMBER
- 2 LOT NUMBER

NOTE:
FOR BUILDING ENVELOPE DIMENSIONS REFER TO PLAN P-1 ENTITLED "FINAL PLAT SUBDIVISION AMENDMENT WEXFORD SUBDIVISION" AS PREPARED BY STUART J. MORROW.

GRAPHIC SCALE
120 0 60 120 240 480
(IN FEET)
1 inch = 120 ft.

SITE ENGINEER:

CIVIL ENGINEERING ASSOCIATES, INC.
10 MANSFIELD VIEW LANE, SOUTH BURLINGTON, VT 05403
802-864-2323 FAX: 802-864-2271 web: www.cea-vt.com

COPYRIGHT © 2010 – ALL RIGHTS RESERVED

DRAWN: ACL
CHECKED: DSM
APPROVED: DSM

OWNER:

LAURA & LIAM MURPHY

100 TAMARACK ROAD
CHARLOTTE, VERMONT

PROJECT:

WEXFORD SUBDIVISION

WEXFORD LANE
AND SOUTH FORTY ROAD
CHARLOTTE, VERMONT

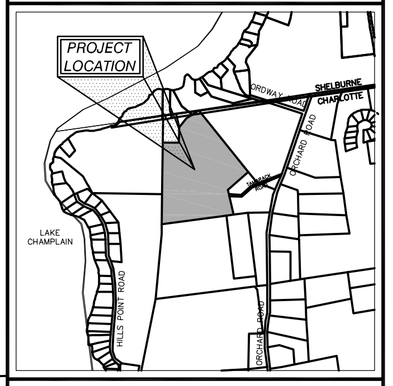

LOCATION MAP
1" = 2000'

DATE	CHECKED	REVISION
1.3.12	DSM/ACL	WIDENED DRIVE (14') TO LOT 7
1.19.12	DSM/JDL	UPDATE LEGEND, NOTES, ENVELOPES
3.20.12	DSM/JDL	WASTE WATER UPDATE

OVERALL SITE PLAN

DATE: NOV., 2011
SCALE: 1" = 120'
PROJ. NO.: 10120

DRAWING NUMBER: C1.0

P:\AutoCADD Projects\2010\101201\-CADD Files-10120\dwg\10120D.dwg, 4/3/2012 10:6:41 PM, jlarose

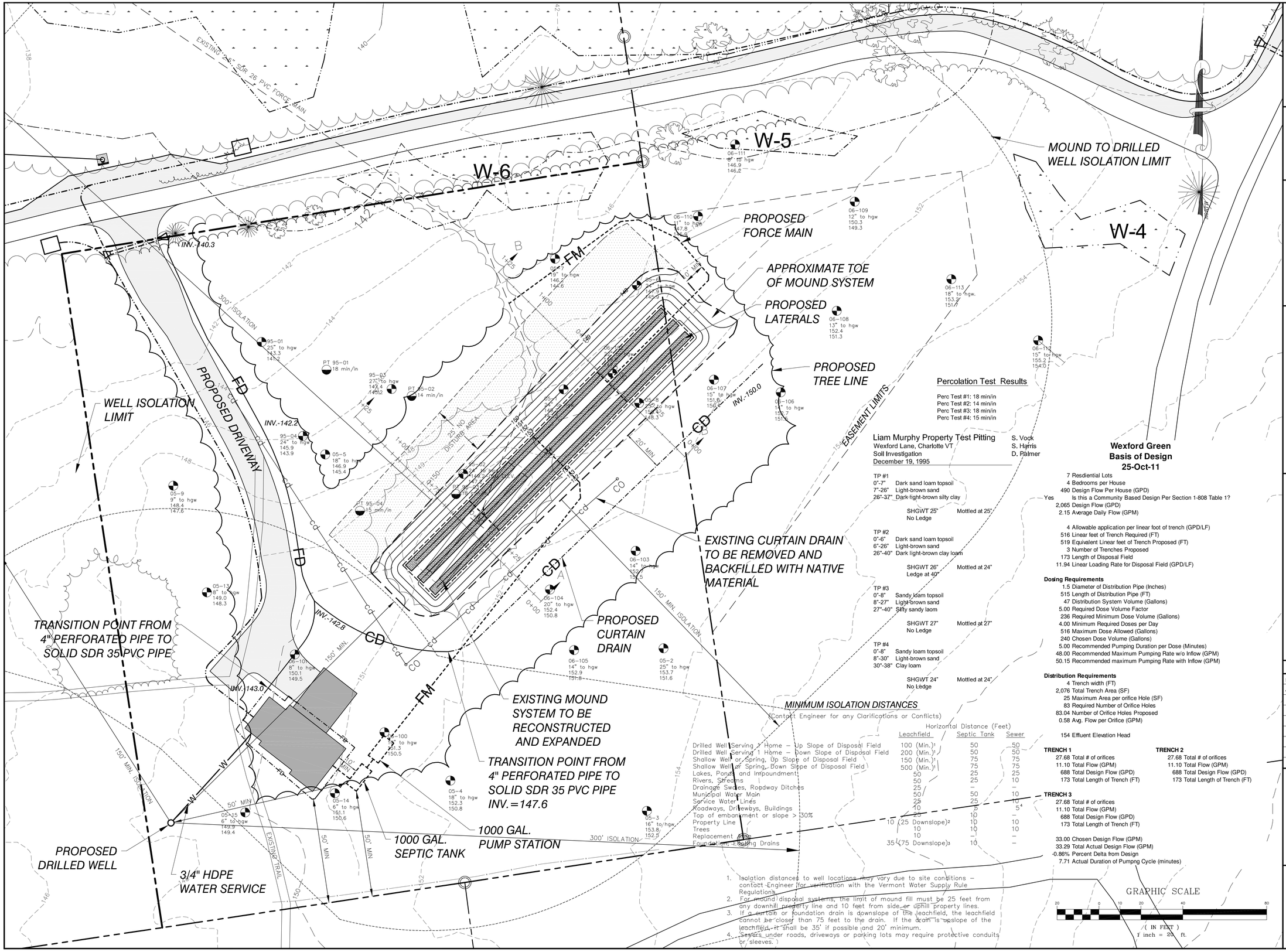

Percolation Test Results

Perc Test #1: 18 min/in
Perc Test #2: 14 min/in
Perc Test #3: 18 min/in
Perc Test #4: 15 min/in

Liam Murphy Property Test Pitting

Wexford Lane, Charlotte VT
Soil Investigation
December 19, 1995

S. Vock
S. Harris
D. Palmer

TP #1
0"-7" Dark sand loam topsoil
7"-26" Light-brown sand
26"-37" Dark light-brown silty clay

SHGWT 25" Mottled at 25"
No Ledge

TP #2
0"-6" Dark sand loam topsoil
6"-26" Light-brown sand
26"-40" Dark light-brown clay loam

SHGWT 26" Mottled at 24"
Ledge at 40"

TP #3
0"-8" Sandy loam topsoil
8"-27" Light-brown sand
27"-40" Silty sandy laom

SHGWT 27" Mottled at 27"
No Ledge

TP #4
0"-8" Sandy loam topsoil
8"-30" Light-brown sand
30"-38" Clay loam

SHGWT 24" Mottled at 24"
No Ledge

Wexford Green Basis of Design 25-Oct-11

7 Resdiential Lots
4 Bedrooms per House
490 Design Flow Per House (GPD)
Yes Is this a Community Based Design Per Section 1-808 Table 1?
2,065 Design Flow (GPD)
2.15 Average Daily Flow (GPM)

4 Allowable application per linear foot of trench (GPD/LF)
516 Linear feet of Trench Required (FT)
519 Equivalent Linear feet of Trench Proposed (FT)
3 Number of Trenches Proposed
173 Length of Disposal Field
11.94 Linear Loading Rate for Disposal Field (GPD/LF)

Dosing Requirements
1.5 Diameter of Distribution Pipe (Inches)
515 Length of Distribution Pipe (FT)
47 Distribution System Volume (Gallons)
5.00 Required Dose Volume Factor
236 Required Minimum Dose Volume (Gallons)
4.00 Minimum Required Doses per Day
516 Maximum Dose Allowed (Gallons)
240 Chosen Dose Volume (Gallons)
5.00 Recommended Pumping Duration per Dose (Minutes)
48.00 Recommended Maximum Pumping Rate w/o Inflow (GPM)
50.15 Recommended maximum Pumping Rate with Inflow (GPM)

Distribution Requirements
4 Trench width (FT)
2,076 Total Trench Area (SF)
25 Maximum Area per orifice Hole (SF)
83 Required Number of Orifice Holes
83.04 Number of Orifice Holes Proposed
0.58 Avg. Flow per Orifice (GPM)

154 Effluent Elevation Head

TRENCH 1
27.68 Total # of orifices
11.10 Total Flow (GPM)
688 Total Design Flow (GPD)
173 Total Length of Trench (FT)

TRENCH 2
27.68 Total # of orifices
11.10 Total Flow (GPM)
688 Total Design Flow (GPD)
173 Total Length of Trench (FT)

TRENCH 3
27.68 Total # of orifices
11.10 Total Flow (GPM)
688 Total Design Flow (GPD)
173 Total Length of Trench (FT)

33.00 Chosen Design Flow (GPM)
33.29 Total Actual Design Flow (GPM)
-0.86% Percent Delta from Design
7.71 Actual Duration of Pumpng Cycle (minutes)

MINIMUM ISOLATION DISTANCES

(Contact Engineer for any Clarifications or Conflicts)

	Horizontal Distance (Feet)		
	Leachfield	Septic Tank	Sewer
Drilled Well Serving 1 Home – Up Slope of Disposal Field	100 (Min.)[1]	50	50
Drilled Well Serving 1 Home – Down Slope of Disposal Field	200 (Min.)[1]	50	50
Shallow Well or Spring, Up Slope of Disposal Field	150 (Min.)[1]	75	75
Shallow Well or Spring, Down Slope of Disposal Field	500 (Min.)[1]	75	75
Lakes, Ponds and Impoundment	50	25	25
Rivers, Streams	50	25	10
Drainage Swales, Roadway Ditches	25	–	–
Municipal Water Main	50	50	10
Service Water Lines	25	25	10
Roadways, Driveways, Buildings	10	5	5[4]
Top of embankment or slope > 30%	25	10	–
Property Line	10 (25 Downslope)[2]	10	10
Trees	10	10	10
Replacement	10	–	–
Foundation, Roofing Drains	35 (75 Downslope)[3]	10	–

1. Isolation distances to well locations may vary due to site conditions – contact Engineer for verification with the Vermont Water Supply Rule Regulations.
2. For mound disposal systems, the limit of mound fill must be 25 feet from any downhill property line and 10 feet from side or uphill property lines.
3. If a curtain or foundation drain is downslope of the leachfield, the leachfield cannot be closer than 75 feet to the drain. If the drain is upslope of the leachfield, it shall be 35' if possible and 20' minimum.
4. Sewers under roads, driveways or parking lots may require protective conduits or sleeves.

GRAPHIC SCALE
20 0 10 20 40 80
(IN FEET)
1 inch = 20 ft.

SITE ENGINEER:

CIVIL ENGINEERING ASSOCIATES, INC.
10 MANSFIELD VIEW LANE, SOUTH BURLINGTON, VT 05403
802-864-2323 FAX. 802-864-2271 web: www.cea-vt.com

COPYRIGHT © 2010 – ALL RIGHTS RESERVED

DRAWN: ACL
CHECKED: DSM
APPROVED: DSM

OWNER:

LAURA & LIAM MURPHY

100 TAMARACK ROAD
CHARLOTTE, VERMONT

PROJECT:

WEXFORD SUBDIVISION

WEXFORD LANE
AND SOUTH FORTY ROAD
CHARLOTTE, VERMONT

LEGEND:

- FD — PREFORATED FOUNDATION DRAIN
- FD — SOLID PIPE CONVEYANCE LINE
- PROPOSED CLEARING LIMITS
- EXISTING CONTOUR

DATE	CHECKED	REVISION
3.20.12	DSM/JDL	WASTE WATER UPDATE
4.3.12	DSM/JDL	WELL LOCATION AND ISOLATION UPDATE (2)

COMMUNITY WASTEWATER DISPOSAL SITE PLAN

DATE: NOV., 2011
SCALE: 1" = 20'
PROJ. NO.: 10120
DRAWING NUMBER: C5.0

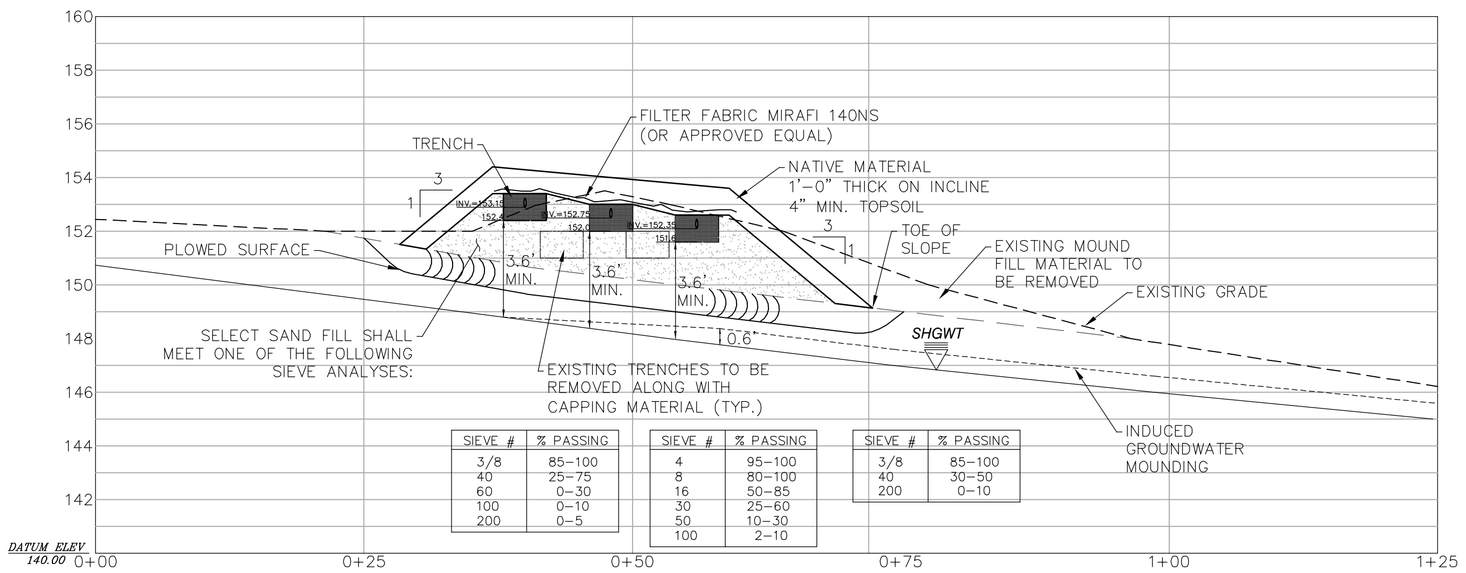

SIEVE #	% PASSING
3/8	85–100
40	25–75
60	0–30
100	0–10
200	0–5

SIEVE #	% PASSING
4	95–100
8	80–100
16	50–85
30	25–60
50	10–30
100	2–10

SIEVE #	% PASSING
3/8	85–100
40	30–50
200	0–10

SECTION A-A

HORZ.: 1"=10'
VERT.: 1"=4'

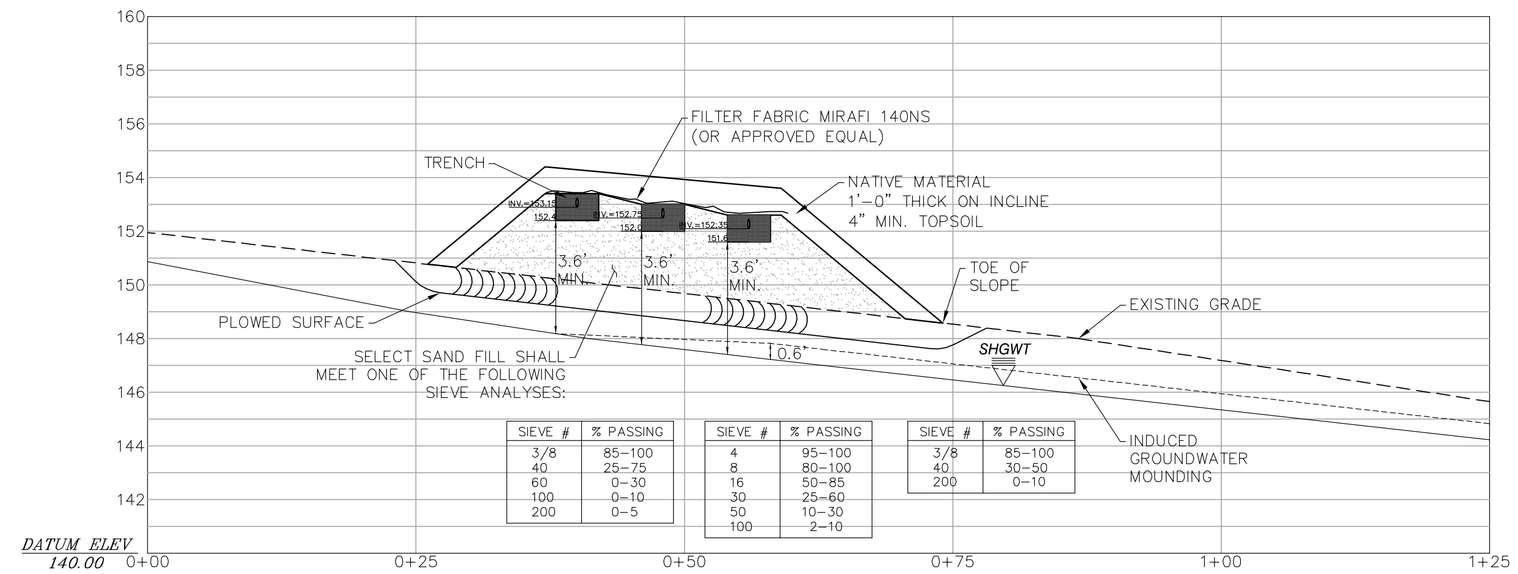

SIEVE #	% PASSING
3/8	85–100
40	25–75
60	0–30
100	0–10
200	0–5

SIEVE #	% PASSING
4	95–100
8	80–100
16	50–85
30	25–60
50	10–30
100	2–10

SIEVE #	% PASSING
3/8	85–100
40	30–50
200	0–10

SECTION B-B

HORZ.: 1"=10'
VERT.: 1"=4'

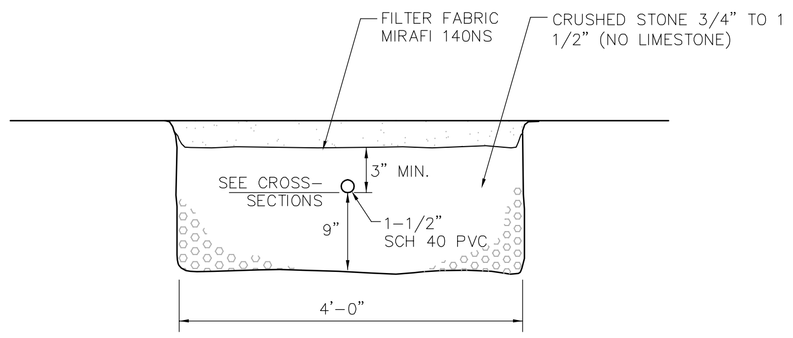

TYPICAL DISPOSAL FIELD TRENCH SECTION

N.T.S.

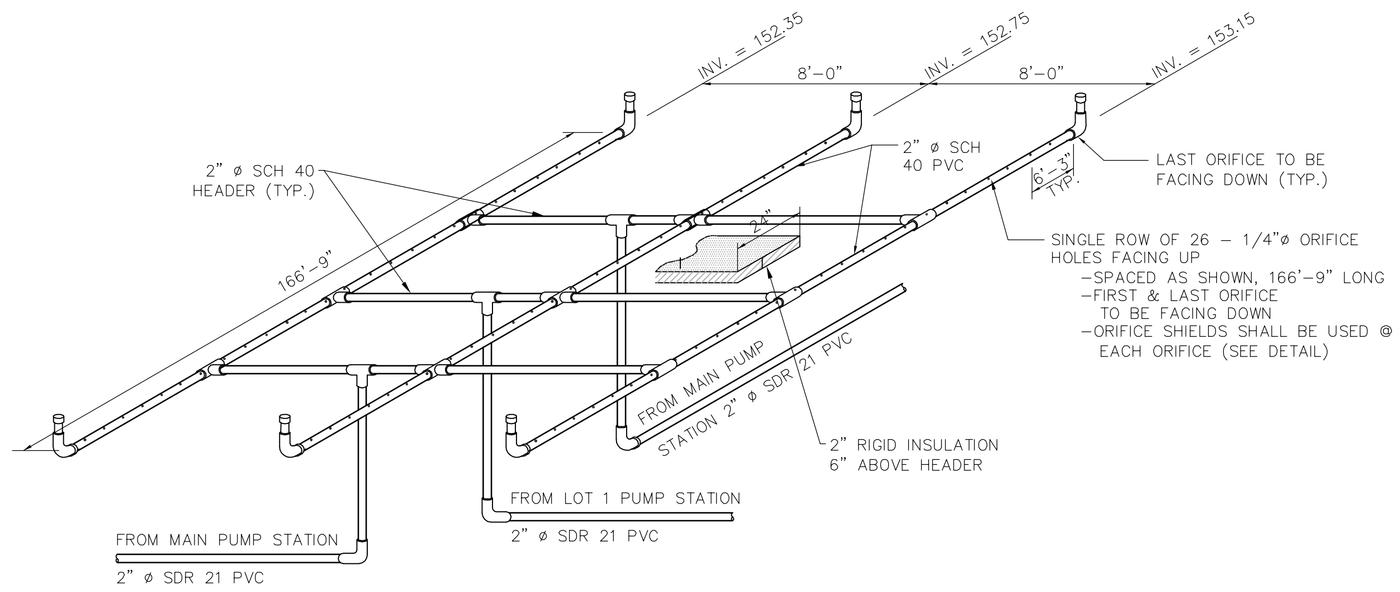

MOUND PIPING DETAIL

MOUND CONSTRUCTION NOTES

DISPOSAL FIELD

A. Materials

1. Schedule 40 PVC pipe meeting the requirements of the latest revision of ASTM Specification D-1785 shall be used. Fittings used in the disposal fields shall be compatible with distribution lines material.
2. Crushed stone shall be clean, durable and no smaller than 3/4 or larger than 1 1/2 inches in diameter.

MOUND CONSTRUCTION

1. The mound system shall be inspected during critical stages of construction by a qualified consultant from Civil Engineering Associates. This shall include the staking of the mound, the plowed surface prior to sand placement, installation and pressure test of the distribution piping, and a final inspection of the entire system. The Contractor will be responsible for contacting the Engineer to set up the inspection schedule.
2. Above-ground vegetation shall be closely cut and removed from the ground surface throughout the area to be utilized for the placement of the fill material. Prior to plowing, the dosing pump discharge line from the pump chamber or dosing chamber to the point of connection with the distribution piping header shall be installed. The area shall then be plowed to a depth of seven to eight inches, parallel to the land contour with the plow throwing the soil upslope to provide a proper interface between the fill and natural soils. Tree stumps should be cut flush with the surface of the ground and roots should not be pulled. Once plowing of the mound area is completed, the area shall be fenced to prevent vehicles and equipment from entering the plowed area.
3. To prevent compaction, construction equipment shall not be moved across the plowed surface or the effluent disposal area. However, after placement of a minimum of six inches of sand fill over the plowed area, construction equipment may be driven over the protected surface to expedite construction. Construction equipment shall be kept off the area down gradient of the disposal field. Construction and/or plowing shall not be initiated when the soil moisture content is high.
4. Construction should be initiated immediately after preparation of the soil interface by placing all of the sand fill needed for the mound to a minimum depth of 21 inches. This depth will permit excavation of trenches to accommodate the crushed stone (twelve inches) necessary for the distribution piping. After hand leveling of the absorption area, the distribution line shall then be carefully placed on the bedding with no slope, holes facing downward, and covered with at least 2" of crushed stone. Prior to covering, the distribution network should be tested with water for even distribution. After installation of the distribution system, crown the entire mound with cover of soil less permeable than the mound fill, covering the 12 inches on the side slopes and a minimum of 18 inches over the center of the mound. Native soil from the site is normally suitable for cover material, though the top two to four inches of this cover should be topsoil. The entire mound shall be seeded, sodded, or otherwise provided with vegetative cover to assure stability of the installation.
5. The area surrounding the mound shall be graded to provide diversion of surface run-off waters.

TESTING NOTES:

1. For testing purposes, the distribution piping shall be established with holes facing up using unglued joints where required. Testing of pressure distribution shall be done in the Engineer's presence. Pressure shall be measured to insure a minimum of 1 psi.
2. The distribution line shall then be carefully placed on the bedding with no slope, holes facing downward, and covered with at least 2" of crushed stone.
3. All work shall be done in accordance with the State of Vermont Environmental Protection Rules.

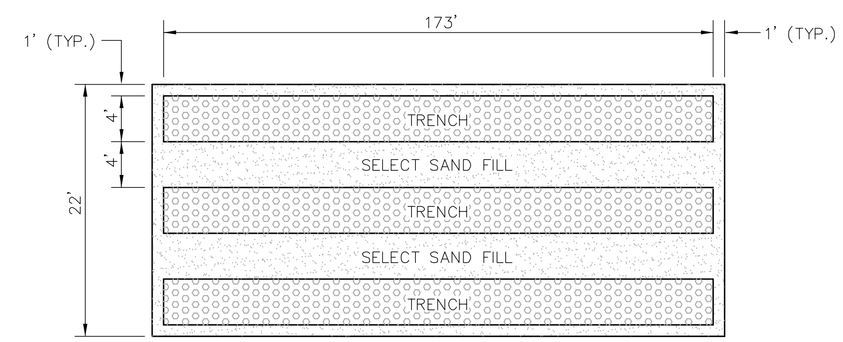

TYPICAL TRENCH PLAN

N.T.S.

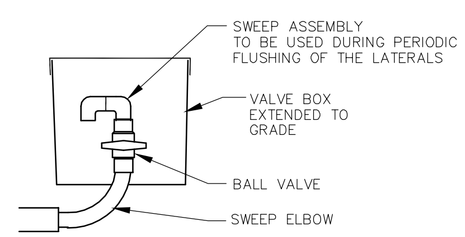

FLUSHING VALVE DETAIL

N.T.S.

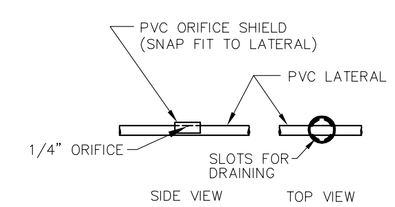

ORIFICE SHIELD DETAIL

N.T.S.

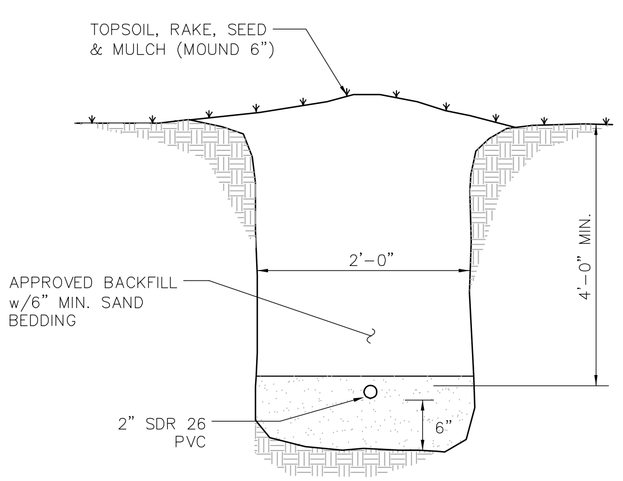

FM TRENCH SECTION

N.T.S.

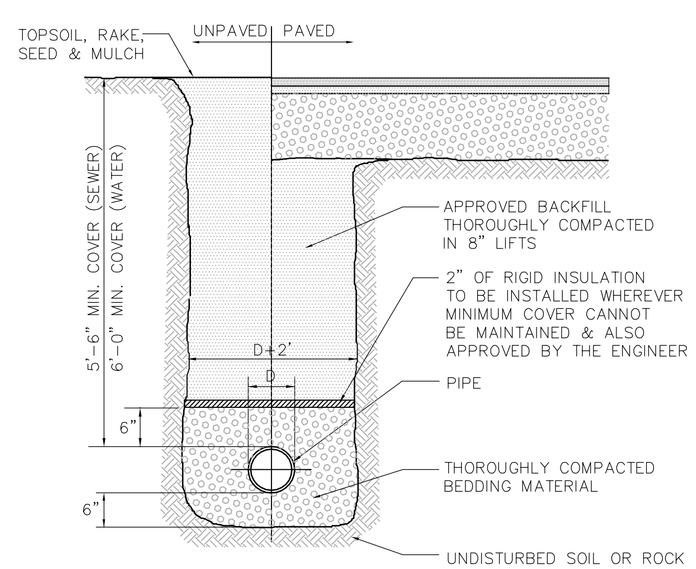

TYPICAL TRENCH DETAIL

N.T.S.

NOTES:

1. Typical trench for water, sewer, and drainage pipe.
2. Compaction of backfill and bedding shall be a minimum of 90% (95% under roadway surfaces) of maximum dry density determined in the standard proctor test (ASTM D698).
3. Bedding material shall not be placed on frozen subgrade.
4. Approved backfill shall not contain any stones more than 6" in largest dimension, 2" maximum diameter within 2' of the outside of the pipe, or any frozen, or organic material.
5. Trenches shall be completely dewatered prior to placing of pipe bedding material and kept dewatered during installation of pipe and backfill.
6. The sides of trenches 4' or more in depth entered by personnel shall be sheeted or sloped to the angle of repose as defined by O.S.H.A. standards.
7. Bedding material for wastewater lines shall consist of crushed stone or gravel with maximum size of 3/4". For water lines bedding material shall be sand. Submit a sample to the Engineer for approval.

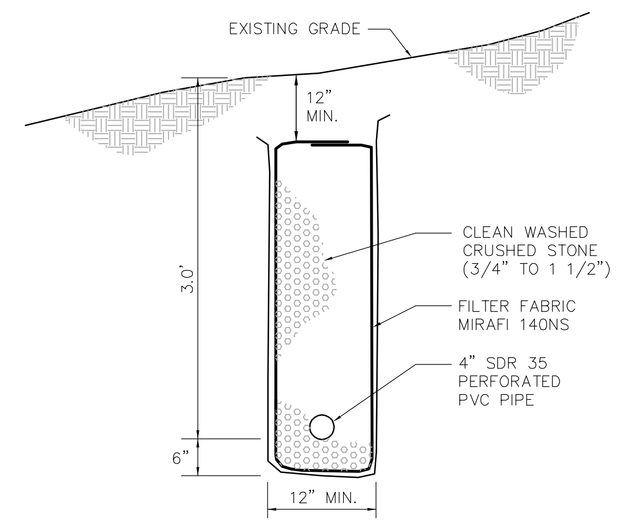

CURTAIN DRAIN DETAIL

N.T.S.

SITE ENGINEER:

CIVIL ENGINEERING ASSOCIATES, INC.
10 MANSFIELD VIEW LANE, SOUTH BURLINGTON, VT 05403
802-864-2323 FAX: 802-864-2271 web: www.cea-vt.com

COPYRIGHT © 2010 – ALL RIGHTS RESERVED

DRAWN: ACL
CHECKED: DSM
APPROVED: DSM

OWNER:

LAURA & LIAM MURPHY

100 TAMARACK ROAD
CHARLOTTE, VERMONT

PROJECT:

WEXFORD SUBDIVISION

WEXFORD LANE
AND SOUTH FORTY ROAD
CHARLOTTE, VERMONT

LOCATION MAP

1" = 2000'

DATE	CHECKED	REVISION
3.20.12	DSM/JDL	WASTE WATER UPDATE

WASTEWATER CROSS SECTIONS AND DETAILS

DATE: NOV., 2011
SCALE: AS SHOWN
PROJ. NO.: 10120
DRAWING NUMBER: C5.1

P:\AutoCADD Projects\2010\1012001-CADD Files-10120\dwg\10120D.dwg, 3/21/2012 9:21:56 AM, jlarose