ZONING DISTRICT: COMMERCIAL LIGHT INDUSTRY

N/F R. LEBOEUF

N/F R. BROOKER

AREA "E"-Future WW BURNS - NORTH TRIANGLE

AREA "F"-Future WW BURNS - TOWN WW NORTH

Existing 20' Wide Forcemain Easement Serving LeBoeuf Lot (Vol. 72 Pg. 231)

CLASS I WETLAND BUFFER

ZONING DISTRICT: WEST CHARLOTTE VILLAGE

GREENBUSH ROAD

N/F ALBERT & MENARD

PROPOSED 3-LOT SUBDIVISION

EXISTING TOWN OF CHARLOTTE WASTEWATER SYSTEM (SERVING TOWN OFFICES, FIRE & RESCUE, LIBRARY & SENIOR CENTER)

CLASS II WETLAND

ZONING DISTRICT: CONSERVATION

NORTH

WP/WR/WS

411.17' N79°30'00"W

35.95' N12°42'40"E

150.00' N8°14'20"W

171.27' S01°12'00"E

4

N/F R. ALLEN

WA

ZONING DISTRICT: RURAL

WP/WR/WS

N/F WYGMANS & O'DEA

384.75' S79°20'50"E

EXISTING WASTEWATER DISPOSAL SYSTEM

N/F OLD LANTERN LLC

GRAVEL PIT

TOWN OF CHARLOTTE (FORMERLY E. & M. BURNS)

WATER LINE FROM WELL

WB

TOWN OF CHARLOTTE (FORMERLY E. & M. BURNS)

U.S. ROUTE 7

1

2

3

345.00' N81°29'25"E

DRILLED WELL

AREA "I"-Future WW BURNS - FLEA MARKET

MAPPED CLAY PLAIN FOREST

EXISTING WOODS ROAD

AREA "H"-Future WW BURNS - TOWN WW SOUTH

PROPOSED WEST WASTEWATER DISPOSAL SYSTEM

AREA "G"-Future WW BURNS - TOWN WW EAST

PROPOSED WEST WASTEWATER DISPOSAL SYSTEM

N/F MACK & REID

AREA "C"-Future WW OLD LANTERN - SOUTH

N/F R&D MACK

ZONING DISTRICT: RURAL

N/F J. BRUSKA

GRAPHIC SCALE

120 0 60 120 240 480

(IN FEET)
1 inch = 120 ft.

LEGEND

- CLAY PLAIN FOREST
- EX. WELL
- WETLAND CLASS III
- WETLAND CLASS II
- WETLAND SETBACK
- STREAM
- WOODS ROAD
- PROPERTY LINE
- 250 CONTOUR

SITE ENGINEER:

CIVIL ENGINEERING ASSOCIATES, INC.
10 MANSFIELD VIEW LANE SO. BURLINGTON, VT 05403
802-864-2323 FAX: 802-864-2271 web: www.cea-vt.com

COPYRIGHT © 2009 - ALL RIGHTS RESERVED

DRAWN: MJW
CHECKED: DSM
APPROVED: DSM

OWNER:

TOWN OF CHARLOTTE
P.O. BOX 119
159 FERRY ROAD
CHARLOTTE
VERMONT

PROJECT/APPLICANT:

GREEN MOUNTAIN HABITAT FOR HUMANITY
GREENBUSH ROAD
CHARLOTTE
VERMONT

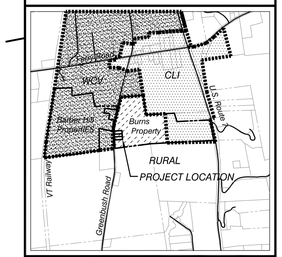

LOCATION MAP
1" = 2000'

DATE	CHECKED	REVISION

OVERALL SITE PLAN

DATE: NOV., 2009
SCALE: 1" = 120'
PROJ. NO.: 09185
DRAWING NUMBER: C1

P:\AutoCADD Projects\2009\09185-SURVEY\09185-TOPO.dwg, 2/12/2010 10:41:48 AM, aloiselle

ZONING DISTRICT: COMMERCIAL LIGHT INDUSTRY

N/F R. LEBOEUF

N/F R. BROOKER

AREA "E"-Future WW BURNS - NORTH TRIANGLE

AREA "F"-Future WW BURNS - TOWN WW NORTH

Existing 20' Wide Forcemain Easement Serving LeBoeuf Lot (Vol. 72 Pg. 231)

CLASS I WETLAND BUFFER

ZONING DISTRICT: WEST CHARLOTTE VILLAGE

GREENBUSH ROAD

N/F ALBERT & MENARD

PROPOSED 3-LOT SUBDIVISION

EXISTING TOWN OF CHARLOTTE WASTEWATER SYSTEM (SERVING TOWN OFFICES, FIRE & RESCUE, LIBRARY & SENIOR CENTER)

CLASS II WETLAND

ZONING DISTRICT: CONSERVATION

NORTH

WP/WR/WS

411.17' N79°30'00"W

35.95' N12°42'40"E

150.00' N8°14'20"W

171.27' S01°12'00"E

4

N/F R. ALLEN

WA

ZONING DISTRICT: RURAL

WP/WR/WS

N/F WYGMANS & O'DEA

384.75' S79°20'50"E

EXISTING WASTEWATER DISPOSAL SYSTEM

N/F OLD LANTERN LLC

GRAVEL PIT

TOWN OF CHARLOTTE (FORMERLY E. & M. BURNS)

WATER LINE FROM WELL

WB

TOWN OF CHARLOTTE (FORMERLY E. & M. BURNS)

U.S. ROUTE 7

1

2

3

345.00' N81°29'25"E

DRILLED WELL

AREA "I"-Future WW BURNS - FLEA MARKET

MAPPED CLAY PLAIN FOREST

EXISTING WOODS ROAD

AREA "H"-Future WW BURNS - TOWN WW SOUTH

PROPOSED WEST WASTEWATER DISPOSAL SYSTEM

AREA "G"-Future WW BURNS - TOWN WW EAST

PROPOSED WEST WASTEWATER DISPOSAL SYSTEM

N/F MACK & REID

AREA "C"-Future WW OLD LANTERN - SOUTH

N/F R&D MACK

ZONING DISTRICT: RURAL

N/F J. BRUSKA

GRAPHIC SCALE

120 0 60 120 240 480

(IN FEET)
1 inch = 120 ft.

LEGEND

- CLAY PLAIN FOREST
- EX. WELL
- WETLAND CLASS III
- WETLAND CLASS II
- WETLAND SETBACK
- STREAM
- WOODS ROAD
- PROPERTY LINE
- 250 CONTOUR

SITE ENGINEER:

CIVIL ENGINEERING ASSOCIATES, INC.
10 MANSFIELD VIEW LANE SO. BURLINGTON, VT 05403
802-864-2323 FAX: 802-864-2271 web: www.cea-vt.com

COPYRIGHT © 2009 - ALL RIGHTS RESERVED

DRAWN: MJW
CHECKED: DSM
APPROVED: DSM

OWNER:

TOWN OF CHARLOTTE
P.O. BOX 119
159 FERRY ROAD
CHARLOTTE
VERMONT

PROJECT/APPLICANT:

GREEN MOUNTAIN HABITAT FOR HUMANITY
GREENBUSH ROAD
CHARLOTTE
VERMONT

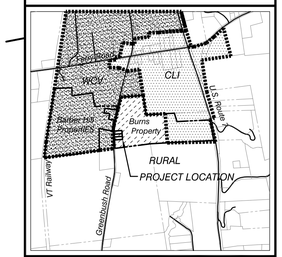

LOCATION MAP
1" = 2000'

DATE	CHECKED	REVISION

OVERALL SITE PLAN

DATE: NOV., 2009
SCALE: 1" = 120'
PROJ. NO.: 09185
DRAWING NUMBER: C1

P:\AutoCADD Projects\2009\09185-SURVEY\09185-TOPO.dwg, 2/12/2010 10:41:48 AM, aloiselle

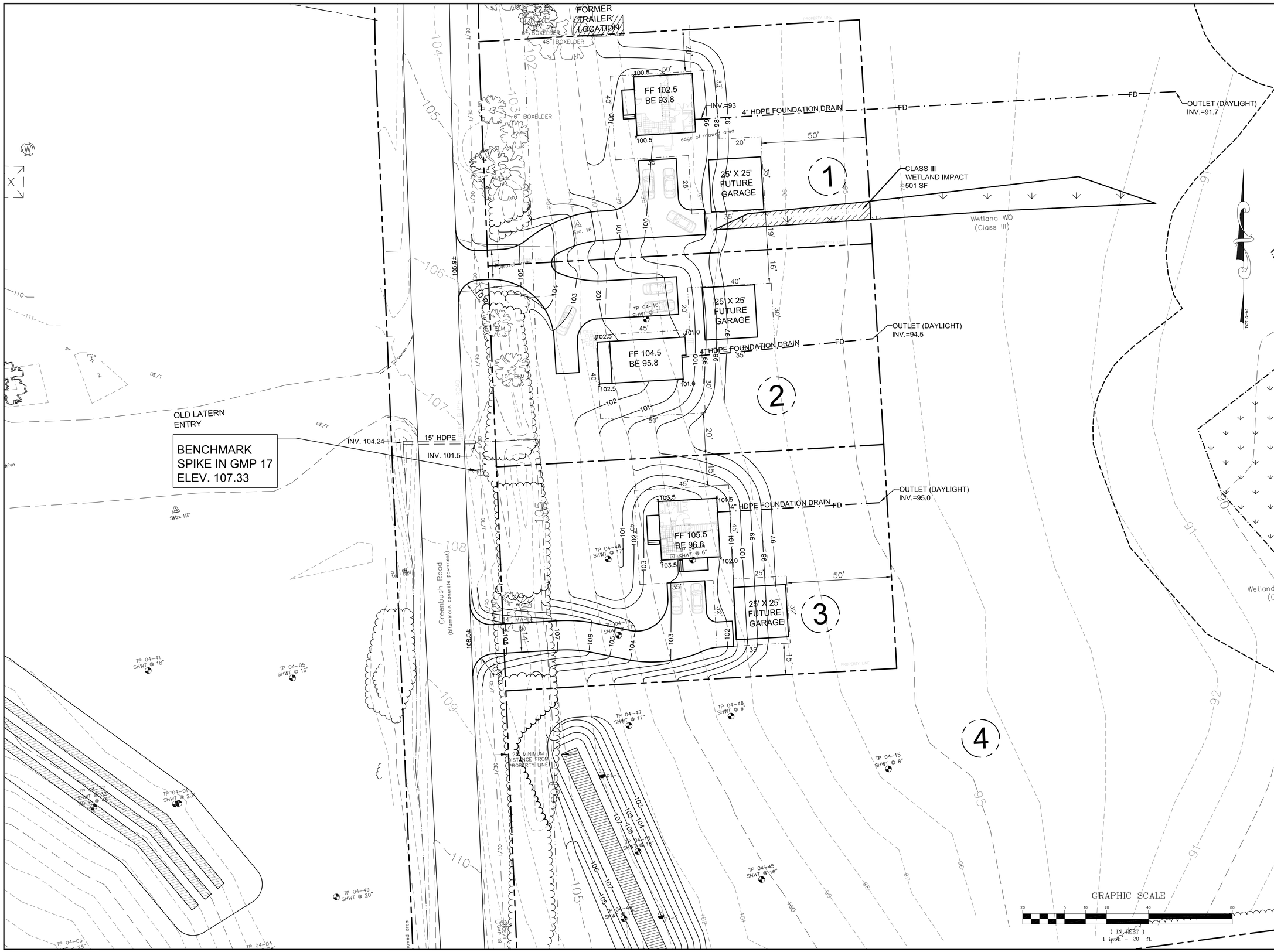

SITE ENGINEER:

CIVIL ENGINEERING ASSOCIATES, INC.
10 MANSFIELD VIEW LANE SO. BURLINGTON, VT 05403
802-864-2323 FAX: 802-864-2271 web: www.cea-vt.com

COPYRIGHT © 2009 – ALL RIGHTS RESERVED

DRAWN
MJW

CHECKED
DSM

APPROVED
DSM

OWNER:

TOWN OF CHARLOTTE
P.O. BOX 119
159 FERRY ROAD
CHARLOTTE
VERMONT

PROJECT/APPLICANT:

GREEN MOUNTAIN HABITAT FOR HUMANITY

GREENBUSH ROAD

CHARLOTTE
VERMONT

LEGEND

- PROPERTY LINE
- 250 CONTOUR
- BUILDING ENVELOPE
- BUILDING ENVELOPE
- EX. WELL
- WETLAND CLASS III
- WETLAND CLASS II
- WETLAND SETBACK
- STREAM
- WOODS ROAD

DATE	CHECKED	REVISION

SITE GRADING & DRAINAGE PLAN

DATE
NOV., 2009

SCALE
1" = 20'

PROJ. NO.
09185

DRAWING NUMBER
C3

P:\AutoCADD Projects\2009\09185-SURVEY\09185-TOPO.dwg, 2/12/2010 10:43:31 AM, aloiselle

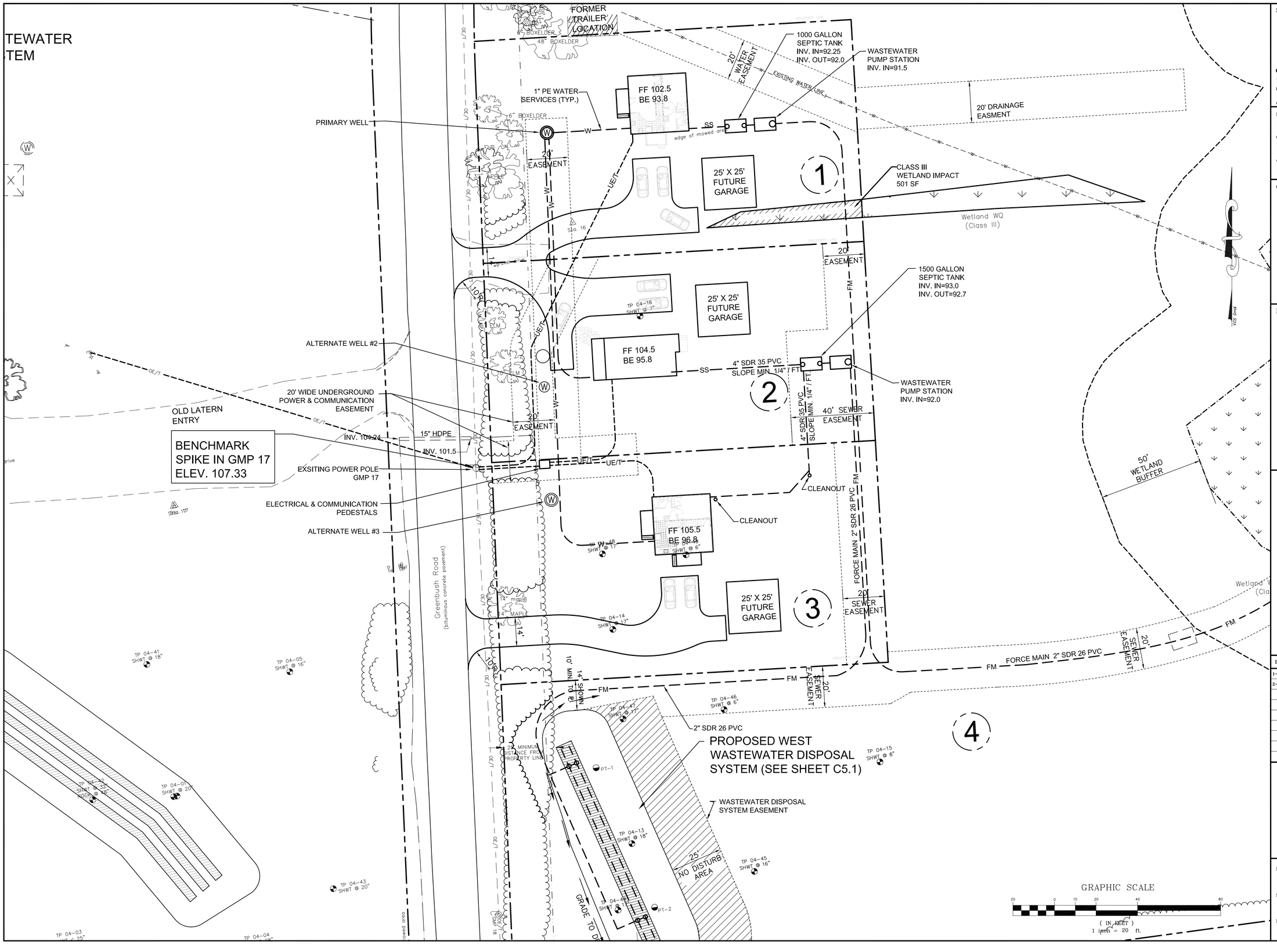

SITE ENGINEER:

CIVIL ENGINEERING ASSOCIATES, INC.
10 MANSFIELD VIEW LANE SO. BURLINGTON, VT 05403
802-864-2323 FAX: 802-864-2271 web: www.cea-vt.com

COPYRIGHT © 2009 – ALL RIGHTS RESERVED

DRAWN: MJW
CHECKED: DSM
APPROVED: DSM

OWNER:

TOWN OF CHARLOTTE
P.O. BOX 119
159 FERRY ROAD
CHARLOTTE
VERMONT

PROJECT/APPLICANT:

GREEN MOUNTAIN HABITAT FOR HUMANITY
GREENBUSH ROAD
CHARLOTTE
VERMONT

DATE	CHECKED	REVISION
1-22-10	DSM	REVISED FORCE MAIN SIZES
2-12-10	DSM	ADDED SEPTIC TK. & PUMP STA. ON LOT 1 REVISED FORCE MAIN

SITE UTILITY PLAN

DATE: NOV., 2009
SCALE: 1" = 20'
PROJ. NO. 09185
DRAWING NUMBER: C4

P:\AutoCADD Projects\2009\09185-SURVEY\09185-TOPO.dwg, 2/12/2010 10:46:42 AM, aloiselle

SITE ENGINEER:

CIVIL ENGINEERING ASSOCIATES, INC.
10 MANSFIELD VIEW LANE SO. BURLINGTON, VT 05403
802-864-2323 FAX: 802-864-2271 web: www.cea-vt.com

COPYRIGHT © 2009 – ALL RIGHTS RESERVED

DRAWN: MJW
CHECKED: DSM
APPROVED: DSM

OWNER:

TOWN OF CHARLOTTE
P.O. BOX 119
159 FERRY ROAD
CHARLOTTE
VERMONT

PROJECT/APPLICANT:

GREEN MOUNTAIN HABITAT FOR HUMANITY

GREENBUSH ROAD

CHARLOTTE
VERMONT

DATE	CHECKED	REVISION
1-22-10	DSM	REVISED FORCE MAIN SIZES
2-12-10	DSM	ADDED SEPTIC TK. & PUMP STA. ON LOT 1 REVISED FORCE MAIN

OVERALL WASTEWATER PLAN

DATE: NOV., 2009
SCALE: 1" = 40'
PROJ. NO.: 09185
DRAWING NUMBER: C-5.0

P:\AutoCADD Projects\2009\09185-SURVEY\09185-TOPO.dwg, 2/12/2010 10:47:18 AM, aloiselle

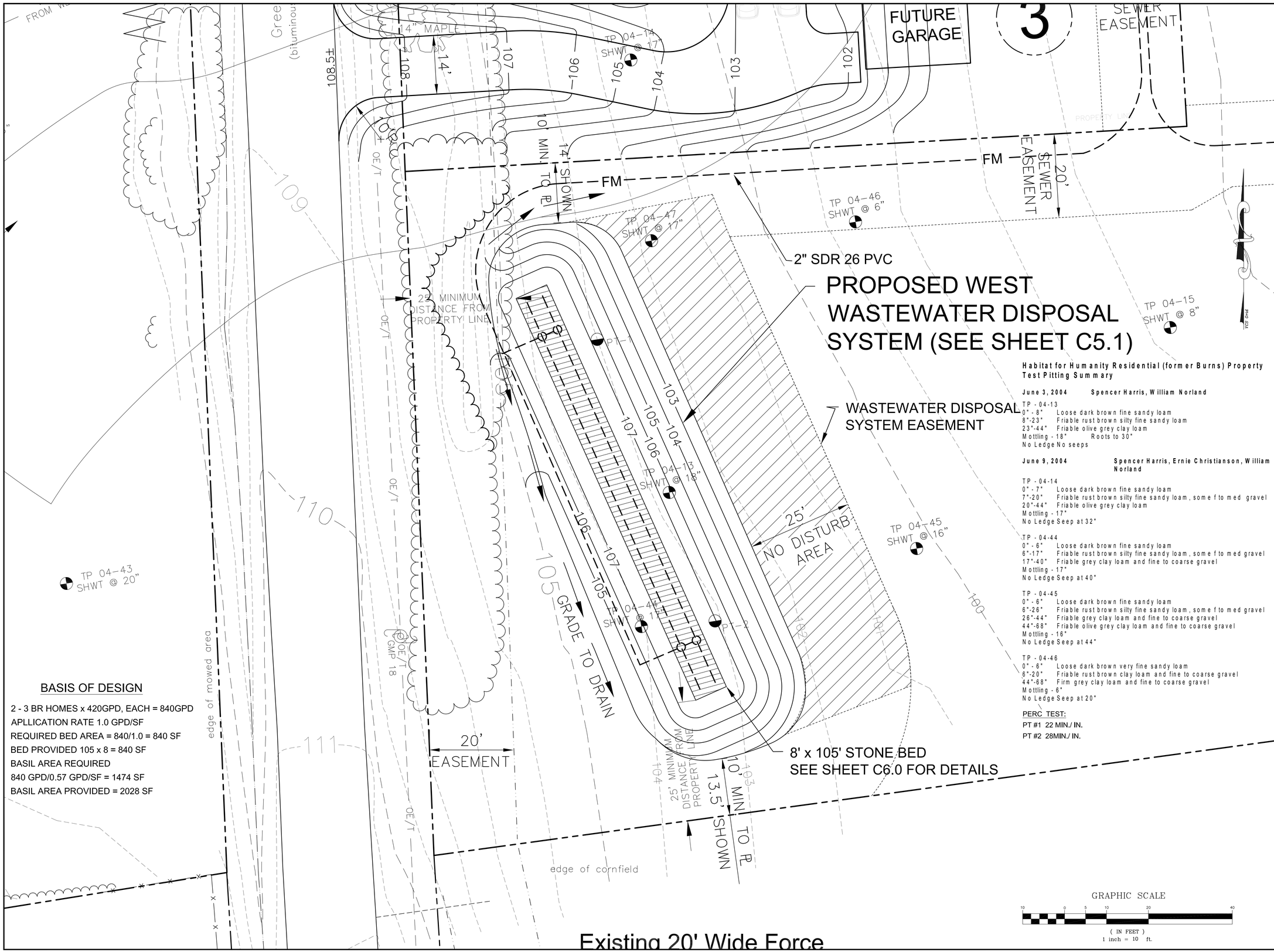

BASIS OF DESIGN

2 - 3 BR HOMES x 420GPD, EACH = 840GPD
APLLICATION RATE 1.0 GPD/SF
REQUIRED BED AREA = 840/1.0 = 840 SF
BED PROVIDED 105 x 8 = 840 SF
BASIL AREA REQUIRED
840 GPD/0.57 GPD/SF = 1474 SF
BASIL AREA PROVIDED = 2028 SF

Habitat for Humanity Residential (former Burns) Property
Test Pitting Summary

June 3, 2004 **Spencer Harris, William Norland**

TP - 04-13
0" - 8" Loose dark brown fine sandy loam
8"-23" Friable rust brown silty fine sandy loam
23"-44" Friable olive grey clay loam
Mottling - 18" Roots to 30"
No Ledge No seeps

June 9, 2004 **Spencer Harris, Ernie Christianson, William Norland**

TP - 04-14
0" - 7" Loose dark brown fine sandy loam
7"-20" Friable rust brown silty fine sandy loam, some f to med gravel
20"-44" Friable olive grey clay loam
Mottling - 17"
No Ledge Seep at 32"

TP - 04-44
0" - 6" Loose dark brown fine sandy loam
6"-17" Friable rust brown silty fine sandy loam, some f to med gravel
17"-40" Friable grey clay loam and fine to coarse gravel
Mottling - 17"
No Ledge Seep at 40"

TP - 04-45
0" - 6" Loose dark brown fine sandy loam
6"-26" Friable rust brown silty fine sandy loam, some f to med gravel
26"-44" Friable grey clay loam and fine to coarse gravel
44"-68" Friable olive grey clay loam and fine to coarse gravel
Mottling - 16"
No Ledge Seep at 44"

TP - 04-46
0" - 6" Loose dark brown very fine sandy loam
6"-20" Friable rust brown clay loam and fine to coarse gravel
44"-68" Firm grey clay loam and fine to coarse gravel
Mottling - 6"
No Ledge Seep at 20"

PERC TEST:
PT #1 22 MIN./ IN.
PT #2 28MIN./ IN.

GRAPHIC SCALE
10 0 5 10 20 40
(IN FEET)
1 inch = 10 ft.

Existing 20' Wide Force

SITE ENGINEER:

CIVIL ENGINEERING ASSOCIATES, INC.
10 MANSFIELD VIEW LANE SO. BURLINGTON, VT 05403
802-864-2323 FAX: 802-864-2271 web: www.cea-vt.com

COPYRIGHT © 2009 – ALL RIGHTS RESERVED

DRAWN: MJW
CHECKED: DSM
APPROVED: DSM

OWNER:

TOWN OF CHARLOTTE
P.O. BOX 119
159 FERRY ROAD
CHARLOTTE
VERMONT

PROJECT/APPLICANT:

GREEN MOUNTAIN HABITAT FOR HUMANITY
GREENBUSH ROAD
CHARLOTTE
VERMONT

DATE	CHECKED	REVISION
1-22-10	DSM	REVISED FORCE MAIN SIZES
2-12-10	DSM	REVISED FORCE MAIN SIZES REMOVED VALVE PIT MANHOLE

WASTEWATER DISPOSAL SYSTEM WEST SITE PLAN

DATE: NOV., 2009
SCALE: 1" = 10'
PROJ. NO. 09185
DRAWING NUMBER: C5.1

P:\AutoCADD Projects\2009\09185-SURVEY\09185-TOPO.dwg, 2/12/2010 10:47:57 AM, aloiselle

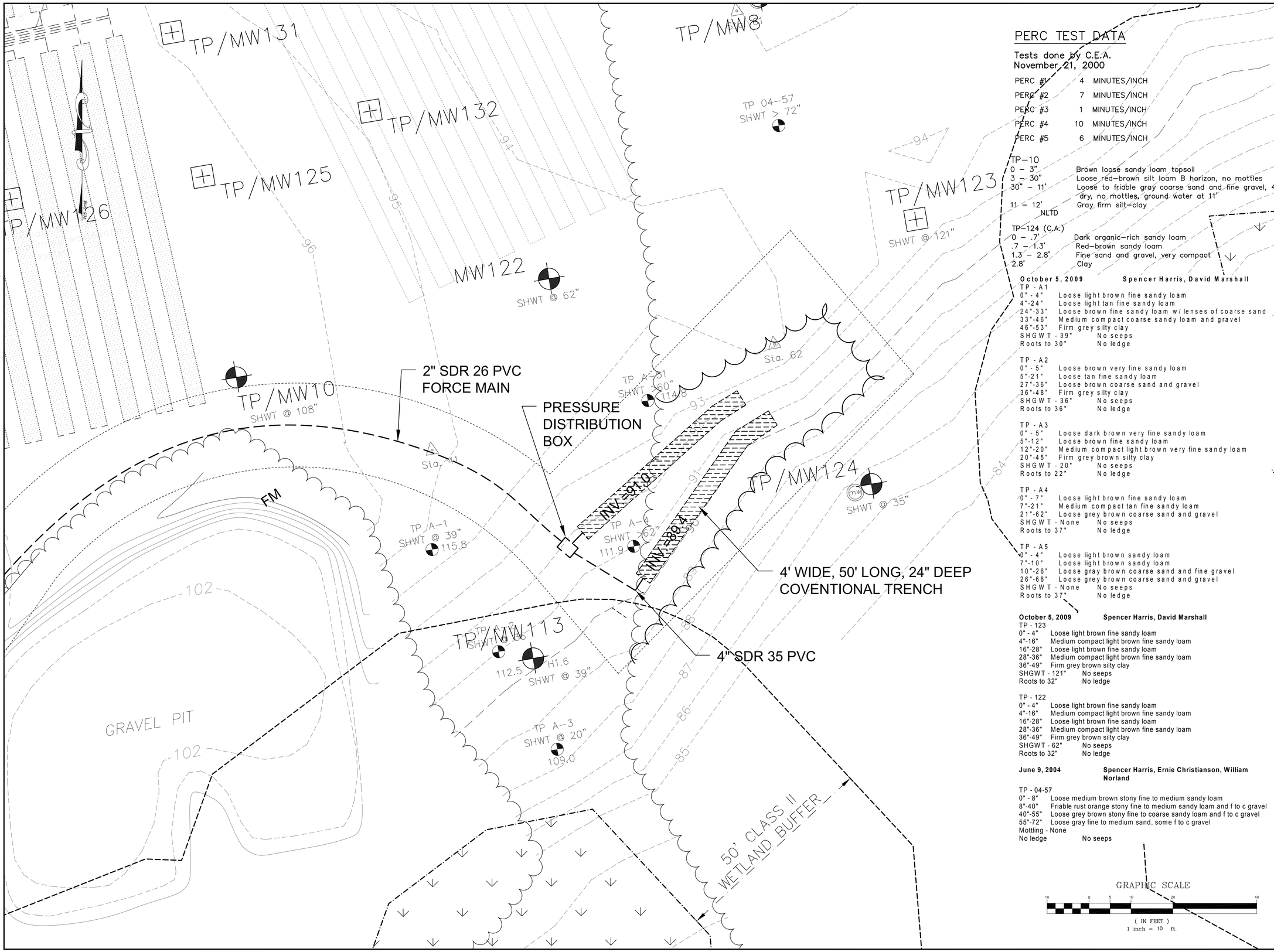

PERC TEST DATA

Tests done by C.E.A.
November 21, 2000

PERC #1	4	MINUTES/INCH
PERC #2	7	MINUTES/INCH
PERC #3	1	MINUTES/INCH
PERC #4	10	MINUTES/INCH
PERC #5	6	MINUTES/INCH

TP–10

0 – 3"	Brown loose sandy loam topsoil
3 – 30"	Loose red–brown silt loam B horizon, no mottles
30" – 11'	Loose to friable gray coarse sand and fine gravel, 40 dry, no mottles, ground water at 11'
11 – 12'	Gray firm silt–clay
NLTD	

TP–124 (C.A.:)

0 – .7'	Dark organic–rich sandy loam
.7 – 1.3'	Red–brown sandy loam
1.3 – 2.8'	Fine sand and gravel, very compact
2.8'	Clay

October 5, 2009 **Spencer Harris, David Marshall**

TP - A1

0" - 4"	Loose light brown fine sandy loam
4"-24"	Loose light tan fine sandy loam
24"-33"	Loose brown fine sandy loam w/ lenses of coarse sand
33"-46"	Medium compact coarse sandy loam and gravel
46"-53"	Firm grey silty clay
SHGWT - 39"	No seeps
Roots to 30"	No ledge

TP - A2

0" - 5"	Loose brown very fine sandy loam
5"-21"	Loose tan fine sandy loam
27"-36"	Loose brown coarse sand and gravel
36"-48"	Firm grey silty clay
SHGWT - 36"	No seeps
Roots to 36"	No ledge

TP - A3

0" - 5"	Loose dark brown very fine sandy loam
5"-12"	Loose brown fine sandy loam
12"-20"	Medium compact light brown very fine sandy loam
20"-45"	Firm grey brown silty clay
SHGWT - 20"	No seeps
Roots to 22"	No ledge

TP - A4

0" - 7"	Loose light brown fine sandy loam
7"-21"	Medium compact tan fine sandy loam
21"-62"	Loose grey brown coarse sand and gravel
SHGWT - None	No seeps
Roots to 37"	No ledge

TP - A5

0" - 4"	Loose light brown sandy loam
7"-10"	Loose light brown sandy loam
10"-26"	Loose gray brown coarse sand and fine gravel
26"-66"	Loose grey brown coarse sand and gravel
SHGWT - None	No seeps
Roots to 37"	No ledge

October 5, 2009 **Spencer Harris, David Marshall**

TP - 123

0" - 4"	Loose light brown fine sandy loam
4"-16"	Medium compact light brown fine sandy loam
16"-28"	Loose light brown fine sandy loam
28"-36"	Medium compact light brown fine sandy loam
36"-49"	Firm grey brown silty clay
SHGWT - 121"	No seeps
Roots to 32"	No ledge

TP - 122

0" - 4"	Loose light brown fine sandy loam
4"-16"	Medium compact light brown fine sandy loam
16"-28"	Loose light brown fine sandy loam
28"-36"	Medium compact light brown fine sandy loam
36"-49"	Firm grey brown silty clay
SHGWT - 62"	No seeps
Roots to 32"	No ledge

June 9, 2004 **Spencer Harris, Ernie Christianson, William Norland**

TP - 04-57

0" - 8"	Loose medium brown stony fine to medium sandy loam
8"-40"	Friable rust orange stony fine to medium sandy loam and f to c gravel
40"-55"	Loose grey brown stony fine to coarse sandy loam and f to c gravel
55"-72"	Loose gray fine to medium sand, some f to c gravel
Mottling - None	
No ledge	No seeps

GRAPHIC SCALE
10 0 5 10 20 40
(IN FEET)
1 inch = 10 ft.

SITE ENGINEER:

CIVIL ENGINEERING ASSOCIATES, INC.
10 MANSFIELD VIEW LANE SO. BURLINGTON, VT 05403
802-864-2323 FAX: 802-864-2271 web: www.cea-vt.com

COPYRIGHT © 2009 – ALL RIGHTS RESERVED

DRAWN: MJW
CHECKED: DSM
APPROVED: DSM

OWNER:

TOWN OF CHARLOTTE
P.O. BOX 119
159 FERRY ROAD
CHARLOTTE
VERMONT

PROJECT/APPLICANT:

GREEN MOUNTAIN HABITAT FOR HUMANITY
GREENBUSH ROAD
CHARLOTTE
VERMONT

DATE	CHECKED	REVISION
2-12-10	DSM	REVISED FORCE MAIN SIZE

WASTEWATER DISPOSAL SYSTEM EAST SITE PLAN

DATE: NOV., 2009
SCALE: 1" = 10'
PROJ. NO. 09185
DRAWING NUMBER: C-5.2

P:\AutoCADD Projects\2009\09185-SURVEY\09185-TOPO.dwg, 2/12/2010 11:10:12 AM, aloiselle

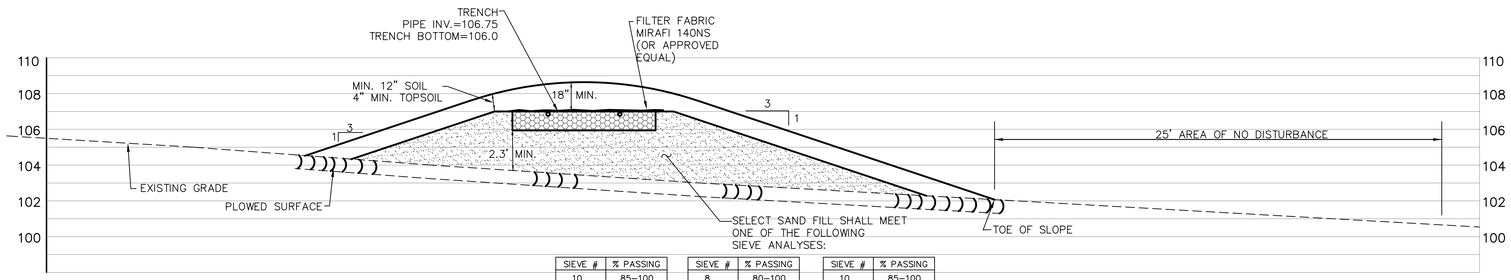

SIEVE #	% PASSING
10	85–100
40	25–75
60	0–30
100	0–10
200	0–5

SIEVE #	% PASSING
8	80–100
16	50–85
30	25–60
50	10–30
100	2–10

SIEVE #	% PASSING
10	85–100
40	30–50
200	0–10

CROSS–SECTION

1/4" = 1'–0"

BASIS OF DESIGN

2 - 3 BR HOMES x 420GPD, EACH = 840GPD

APLLICATION RATE 1.0 GPD/SF

REQUIRED BED AREA = 840/1.0 = 840 SF

BED PROVIDED 105 x 8 = 840 SF

BASIL AREA REQUIRED

840 GPD/0.57 GPD/SF = 1474 SF

BASIL AREA PROVIDED = 2028 SF

MINIMUM ISOLATION DISTANCES

(Contact Engineer for any Clarifications or Conflicts)

	Horizontal Distance (Ft.) Edge of Disposal Field Stone	Septic Tank
Shallow Well or Spring, Up Slope of Disposal Field	150*(Min.)	75
Shallow Well or Spring, Down Slope of Disposal Field	500*(Min.)	--
Drilled Well Serving 1 Home – Up Slope of Disposal Field	100*(Min.)	50
Drilled Well Serving 1 Home – Down Slope of Disposal Field	200*(Min.)	--
Municipal Water Main	50	50
Service Water Lines	25	25
Roadways, Driveways, Buildings	10	5
Stream, Watercourse, Lake or Impoundment	50	25
Drainage Swales, Roadway Ditches	25	--
Top of embankment or slope > 30%	25	10
Trees	10	10
Foundation, Footing Drains	35 (75 Downslope)	10
Replacement Area	10	10
Property Line	25	10

*Isolation distances to well locations may vary due to site conditions – contact Engineer for verification with the Vermont Water Supply Rule Regulations.

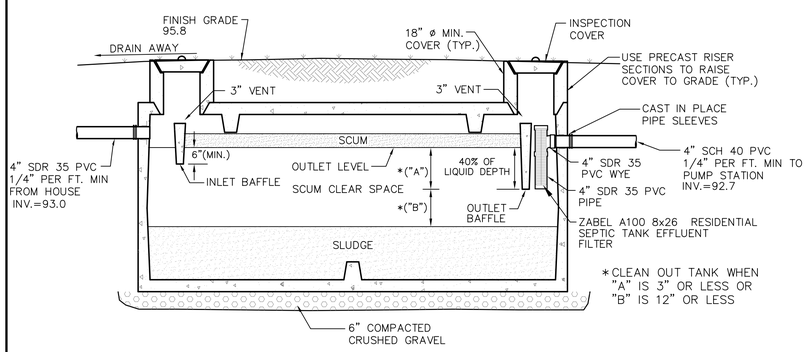

1500 GALLON SEPTIC TANK (lot 2 & lot 3)

N.T.S.

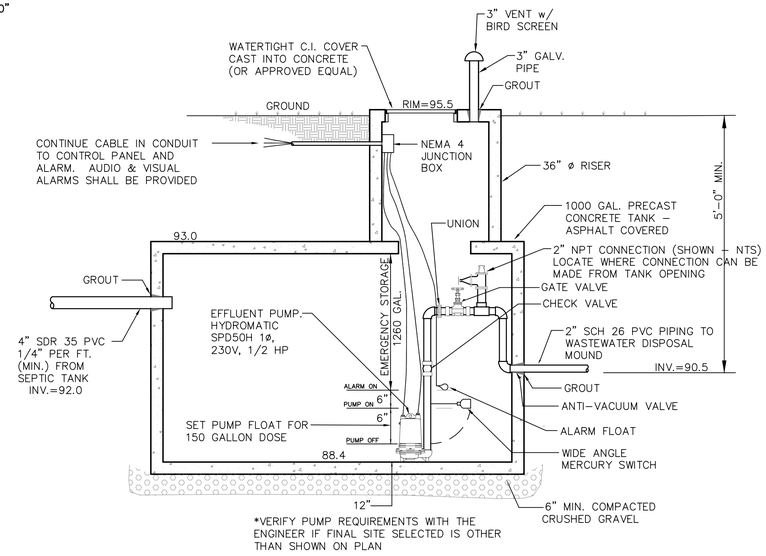

1500 GALLON PUMP STATION DETAIL (lot 2 & lot 3)

N.T.S.

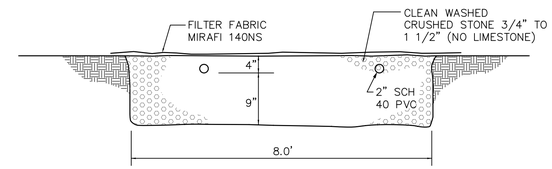

TYPICAL DISPOSAL FIELD TRENCH SECTION

N.T.S.

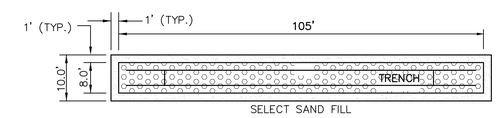

TYPICAL TRENCH PLAN

N.T.S.

Septic Tank Notes

1. Septic tank shall be a precast concrete tank, unless otherwise approved.
2. Maintenance
   - At least once a year, the depth of sludge and scum in the septic tank should be measured. The tank should be pumped if:
     - The sludge is closer than twelve inches to the outlet baffle or;
     - The scum layer is closer than three inches to the outlet baffle.
   - Under no circumstances should anyone enter a septic tank.
3. Recommendations
   - The use of garbage grinders is discouraged as sludge accumulation in the septic tank can be increased by up to 40 %. If used, the septic tank will require more frequent pumping.
   - The septic system is designed to handle human waste and toilet paper, plus water from plumbing fixtures such as toilets, baths and sinks. Moderate use of household cleaners, detergents and bleach should not damage your system; however, indiscriminate use may cause problems. Non–degradable paper products and any other non–biodegradable substances should not be put in your wastewater system.
   - Minimize the amount of water used in the household. Excessive water could flush solids from the septic tank to the disposal field which leads to clogging or plugging of the piping. When dishwashers and washers are used, make sure loads are full and stagger their use to reduce peak flows, i.e. stagger loads of laundry over several days instead of one day.
4. Walkways, patios and decks or other permanent structures should not be constructed over the septic tank.
5. There should be no need to use commercial "starter", "bacterial feeds", or "cleaners", etc. Bacteria in a septic tank system occurs naturally.

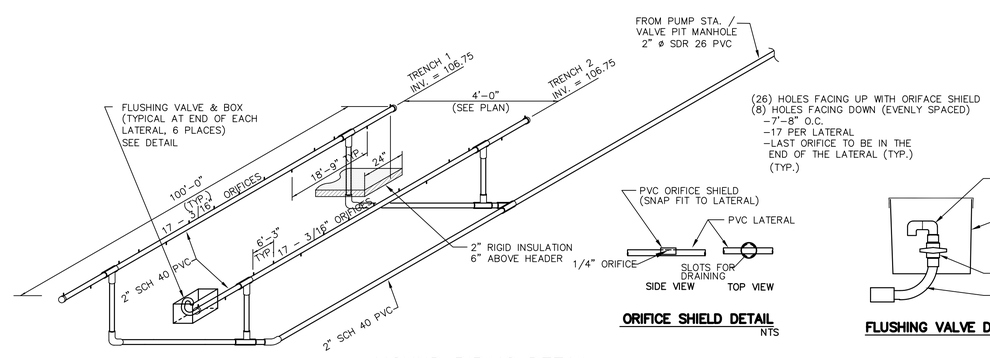

MOUND PIPING DETAIL

N.T.S.

ORIFICE SHIELD DETAIL

NTS

FLUSHING VALVE DETAIL

NTS

SITE ENGINEER:

CIVIL ENGINEERING ASSOCIATES, INC.
P.O. BOX 485 SHELBURNE, VT 05482
802-985-2323 FAX: 802-985-2271 web: www.cea-vt.com

COPYRIGHT © 2007 – ALL RIGHTS RESERVED

DRAWN: ACL

CHECKED: DSM

APPROVED: DSM

OWNER:

TOWN OF CHARLOTTE
P.O. BOX 119
159 FERRY ROAD
CHARLOTTE
VERMONT

PROJECT:

GREEN MOUNTAIN HABITAT FOR HUMANITY

GREENBUSH ROAD

CHARLOTTE
VERMONT

DATE	CHECKED	REVISION
1-22-10	DSM	REVISED FORCE MAIN SIZE

WASTEWATER DISPOSAL SYSTEM DETAILS & SECTIONS

DATE: NOV., 2009

SCALE: AS SHOWN

PROJ. NO.: 09185

DRAWING NUMBER: C-6.0

P:\AutoCADD Projects\2009\09185-SURVEY\09185-TOPO.dwg, 2/12/2010 11:11:14 AM, aloiselle

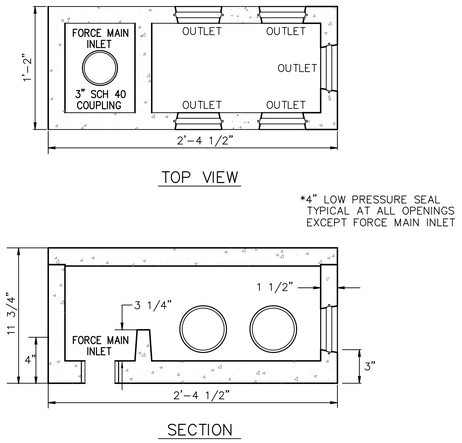

DISTRIBUTION BOX

(FM INLET, 5 OUTLET) NTS

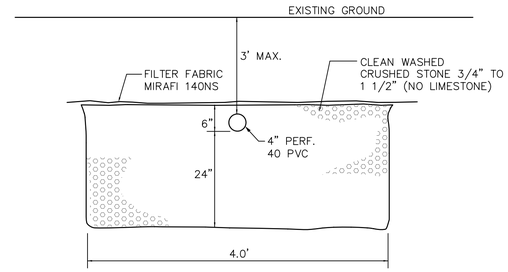

TYPICAL DISPOSAL FIELD TRENCH SECTION

N.T.S.

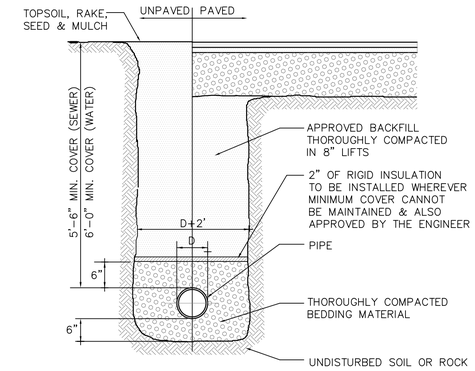

TYPICAL TRENCH DETAIL

N.T.S.

NOTES:

1. Typical trench for water, sewer, and drainage pipe.
2. Compaction of backfill and bedding shall be a minimum of 90% (95% under roadway surfaces) of maximum dry density determined in the standard proctor test (ASTM D698).
3. Bedding material shall not be placed on frozen subgrade.
4. Approved backfill shall not contain any stones more than 6" in largest dimension, 2" maximum diameter within 2' of the outside of the pipe, or any frozen, or organic material.
5. Trenches shall be completely dewatered prior to placing of pipe bedding material and kept dewatered during installation of pipe and backfill.
6. The sides of trenches 4' or more in depth entered by personnel shall be sheeted or sloped to the angle of repose as defined by O.S.H.A. standards.
7. Bedding material for wastewater lines shall consist of crushed stone or gravel with maximum size of 3/4". For water lines bedding material shall be sand. Submit a sample to the Engineer for approval.

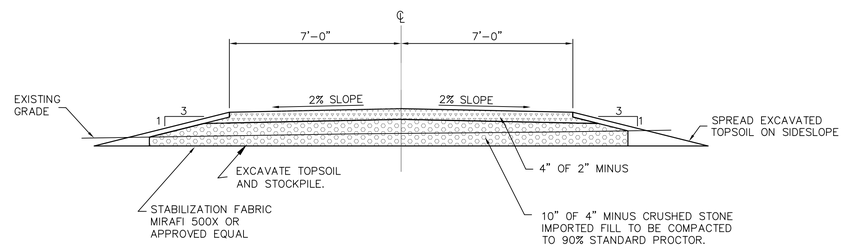

TYPICAL GRAVEL ROADWAY SECTION

NTS

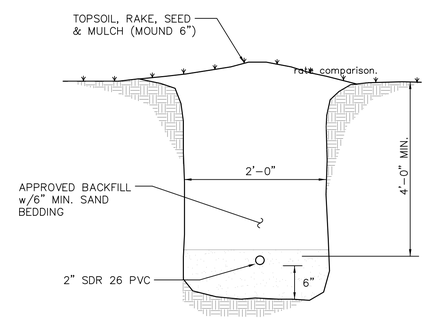

FM TRENCH SECTION

N.T.S.

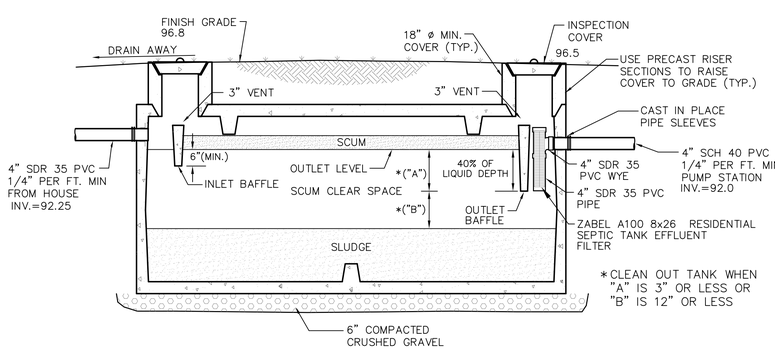

1000 GALLON SEPTIC TANK (lot 1)

N.T.S.

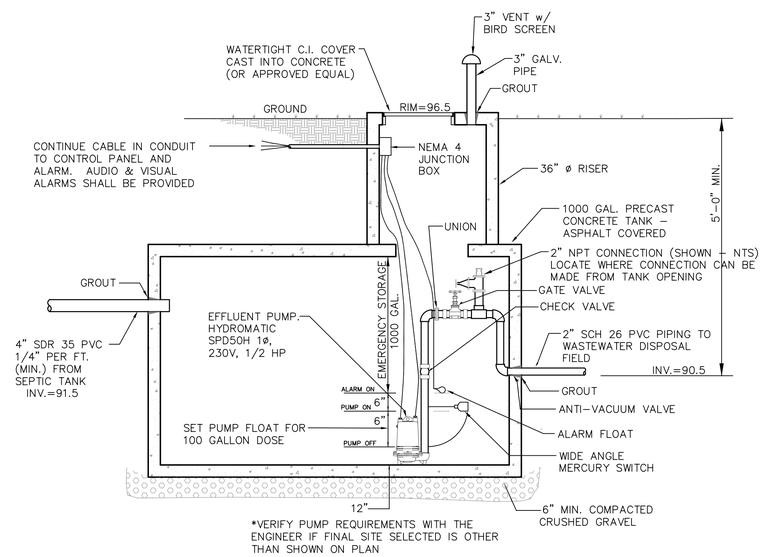

1000 GALLON PUMP STATION DETAIL (lot 1)

N.T.S.

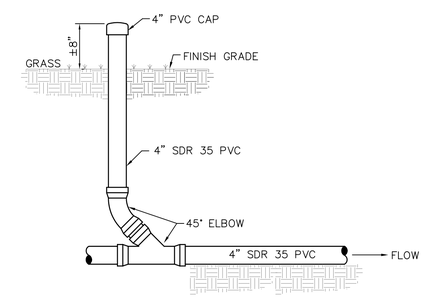

TYPICAL CLEANOUT DETAIL

N.T.S.

SITE ENGINEER:

CIVIL ENGINEERING ASSOCIATES, INC.
P.O. BOX 485 SHELBURNE, VT 05482
802-985-2323 FAX: 802-985-2271 web: www.cea-vt.com

COPYRIGHT © 2007 – ALL RIGHTS RESERVED

DRAWN: ACL
CHECKED: DSM
APPROVED: DSM

OWNER:

TOWN OF CHARLOTTE
P.O. BOX 119
159 FERRY ROAD
CHARLOTTE
VERMONT

PROJECT:

GREEN MOUNTAIN HABITAT FOR HUMANITY
GREENBUSH ROAD
CHARLOTTE
VERMONT

DATE	CHECKED	REVISION

WASTEWATER DISPOSAL SYSTEM DETAILS

DATE: NOV., 2009
SCALE: AS SHOWN
PROJ. NO.: 09185
DRAWING NUMBER: C-6.1

P:\AutoCADD Projects\2009\09185-SURVEY\09185-TOPO.dwg, 2/12/2010 3:19:18 PM, aloiselle

- Reference Plats or Maps -

A. "*Minor Subdivision - Property of Earl & Mary Burns*", dated Sept. 20, 1985, by Civil Engineering Associates. Charlotte Land Records Plat Slide 49 Vol. 7 Pg. 3.

B. "*Final Plat - Major Subdivision - Boundary Adjustments - Property of the Charlotte Land Trust*", revised Jan. 23, 2001, by S. J. Morrow, LS. Charlotte Land Records Plat Slide 123 Clip 5 Pg. 21.

C. "Preliminary *Plat - Major Subdivision - Boundary Adjustments - Property of the Charlotte Land Trust*", revised Oct. 26, 2000, by S.J. Morrow, LS.

D. "*Project No. F-019-4(2)*", Vermont Agency of Transportation.

E. "Wastewater Site Plan - Richard LeBoeuf", last revised Dec., 1992, by Pinkham Engineering Associates. Recorded April 1993, Charlotte Land Records.

- Legend of Symbols -

- SUBJECT PROPERTY LINE
- OTHER PROPERTY LINE
- EXISTING EASEMENT LINE
- PROPOSED EASEMENT LINE
- PROPOSED BUILDING ENVELOPE
- IPF / IRF — IRON PIPE / ROD FOUND
- IRS — IRON ROD SET (NOTE 4)
- CMP — CONC. MARKER (PROPOSED)
- EXIST. UTILITY POLE

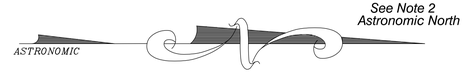

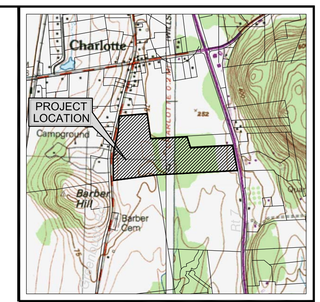

LOCATION MAP

Not to Scale

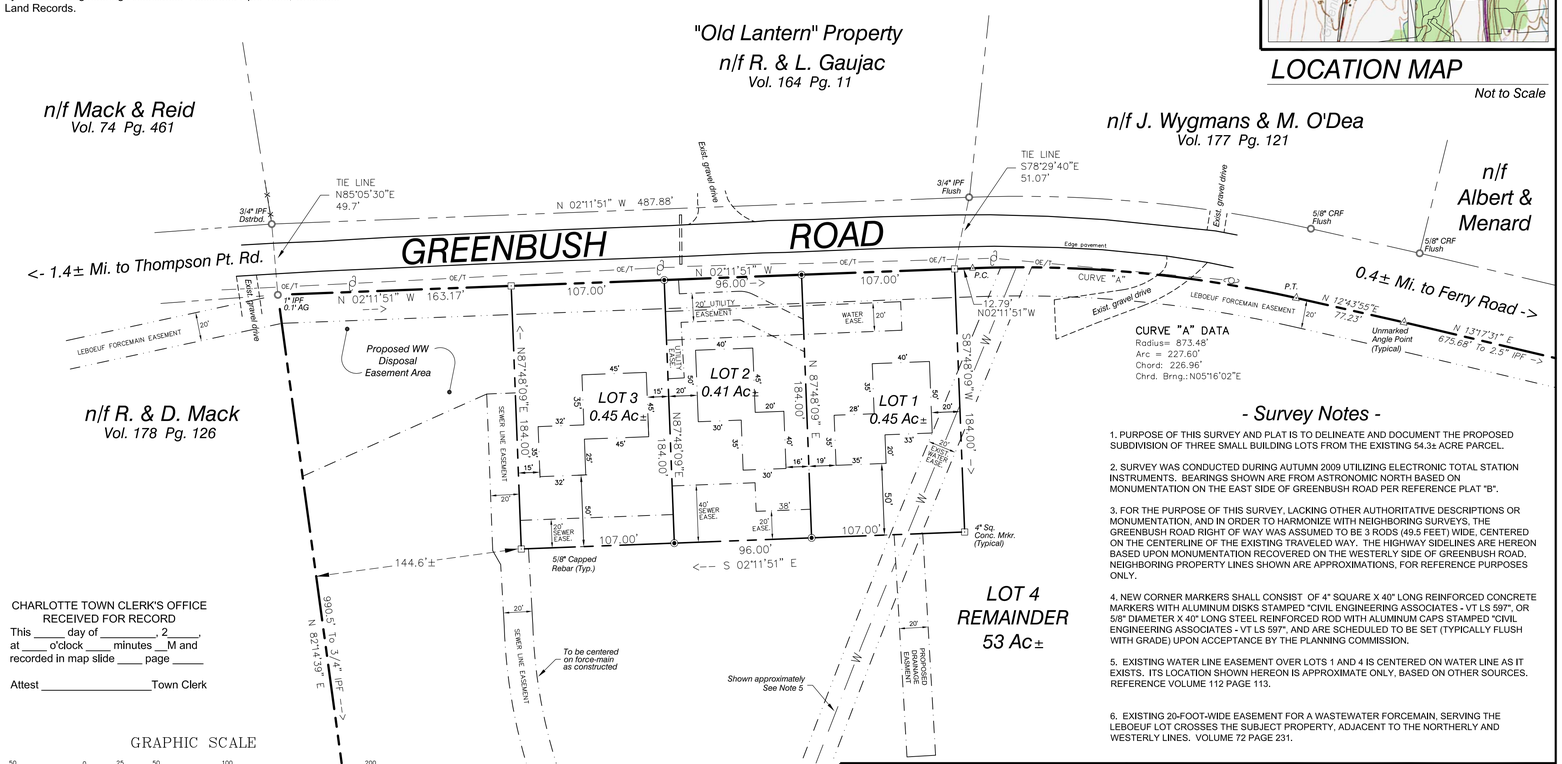

CURVE "A" DATA

Radius= 873.48'
Arc = 227.60'
Chord: 226.96'
Chrd. Brng.:N05°16'02"E

- Survey Notes -

1. PURPOSE OF THIS SURVEY AND PLAT IS TO DELINEATE AND DOCUMENT THE PROPOSED SUBDIVISION OF THREE SMALL BUILDING LOTS FROM THE EXISTING 54.3± ACRE PARCEL.

2. SURVEY WAS CONDUCTED DURING AUTUMN 2009 UTILIZING ELECTRONIC TOTAL STATION INSTRUMENTS. BEARINGS SHOWN ARE FROM ASTRONOMIC NORTH BASED ON MONUMENTATION ON THE EAST SIDE OF GREENBUSH ROAD PER REFERENCE PLAT "B".

3. FOR THE PURPOSE OF THIS SURVEY, LACKING OTHER AUTHORITATIVE DESCRIPTIONS OR MONUMENTATION, AND IN ORDER TO HARMONIZE WITH NEIGHBORING SURVEYS, THE GREENBUSH ROAD RIGHT OF WAY WAS ASSUMED TO BE 3 RODS (49.5 FEET) WIDE, CENTERED ON THE CENTERLINE OF THE EXISTING TRAVELED WAY. THE HIGHWAY SIDELINES ARE HEREON BASED UPON MONUMENTATION RECOVERED ON THE WESTERLY SIDE OF GREENBUSH ROAD, NEIGHBORING PROPERTY LINES SHOWN ARE APPROXIMATIONS, FOR REFERENCE PURPOSES ONLY.

4. NEW CORNER MARKERS SHALL CONSIST OF 4" SQUARE X 40" LONG REINFORCED CONCRETE MARKERS WITH ALUMINUM DISKS STAMPED "CIVIL ENGINEERING ASSOCIATES - VT LS 597", OR 5/8" DIAMETER X 40" LONG STEEL REINFORCED ROD WITH ALUMINUM CAPS STAMPED "CIVIL ENGINEERING ASSOCIATES - VT LS 597", AND ARE SCHEDULED TO BE SET (TYPICALLY FLUSH WITH GRADE) UPON ACCEPTANCE BY THE PLANNING COMMISSION.

5. EXISTING WATER LINE EASEMENT OVER LOTS 1 AND 4 IS CENTERED ON WATER LINE AS IT EXISTS. ITS LOCATION SHOWN HEREON IS APPROXIMATE ONLY, BASED ON OTHER SOURCES. REFERENCE VOLUME 112 PAGE 113.

6. EXISTING 20-FOOT-WIDE EASEMENT FOR A WASTEWATER FORCEMAIN, SERVING THE LEBOEUF LOT CROSSES THE SUBJECT PROPERTY, ADJACENT TO THE NORTHERLY AND WESTERLY LINES. VOLUME 72 PAGE 231.

CHARLOTTE TOWN CLERK'S OFFICE
RECEIVED FOR RECORD
This _____ day of _____, 2_____,
at ____ o'clock ____ minutes __M and
recorded in map slide ____ page _____

Attest _____Town Clerk

GRAPHIC SCALE

50 0 25 50 100 200

(IN FEET)
1 inch = 50 ft.

APPROVED BY RESOLUTION OF THE CHARLOTTE, VERMONT PLANNING COMMISSION, ON THE _____ DAY OF _____, 2_____, SUBJECT TO THE REQUIREMENTS AND CONDITIONS OF SAID RESOLUTION. SIGNED THIS _____ DAY OF _____, 2_____.

BY _____, CHAIRPERSON.

To the best of my knowledge & belief this plat properly depicts the results of a survey conducted under my direct supervision as outlined in notes above, based upon our analysis of record and physical evidence found. Existing parcel boundaries shown are substantially consistent with the record. This plat is in substantial compliance with 27 VSA 1403. This statement valid only when accompanied by my original signature and seal.

Timothy R. Cowan VT LS 597

Date	By	Revision
02.12.10	TRC	Revised Sewer Easement
01.08.09	TRC	Add Exist. Easements, Revise notations

Drawn by	JB/TRC	Date	OCT. 17, 2009
Checked by	_____	Scale	1" = 50'
Approved by	_____	Project No.	09185

DETAIL VIEW

TOWN of CHARLOTTE's "BURNS PROPERTY"

GREENBUSH ROAD *CHARLOTTE, VERMONT*

CIVIL ENGINEERING ASSOCIATES, INC.
10 MANSFIELD VIEW LANE, SOUTH BURLINGTON, VT 05403
802-864-2323 FAX: 802-864-2271 web: www.cea-vt.com

COPYRIGHT © 2010 - ALL RIGHTS RESERVED

SHEET 1 Sheet 1 of 2

P:\AutoCADD Projects\2009\09185-SURVEY\09185-PLAT.dwg, 2/12/2010 1:21:35 PM, aloiselle

- Legend of Symbols -

- SUBJECT PROPERTY LINE
- OTHER PROPERTY LINE
- EXISTING EASEMENT LINE
- PROPOSED EASEMENT LINE
- IPF / IRF — IRON PIPE / ROD FOUND
- IRS — IRON ROD SET (NOTE 4)
- CMS — CONC. MARKER (TO BE) SET
- EXIST. UTILITY POLE
- OPEN SPACE

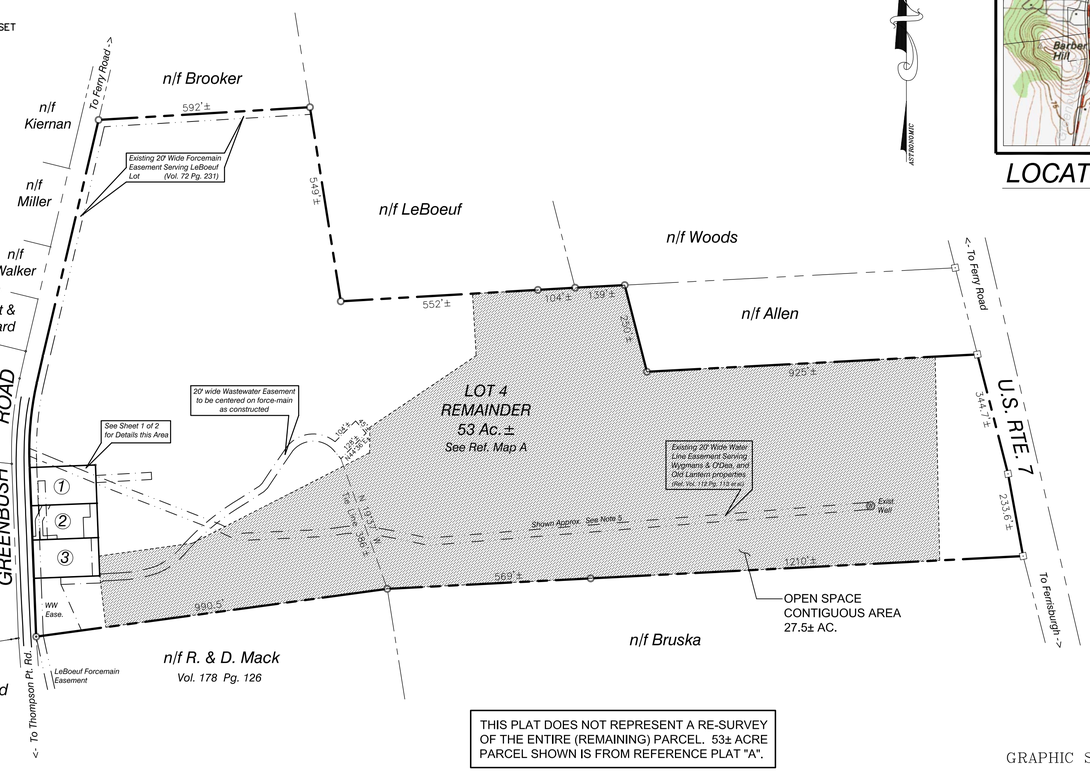

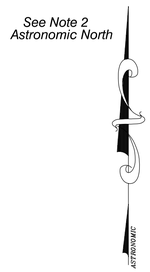

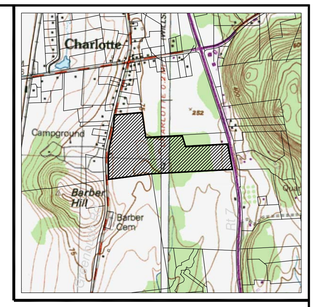

LOCATION MAP

Not to Scale

THIS PLAT DOES NOT REPRESENT A RE-SURVEY OF THE ENTIRE (REMAINING) PARCEL. 53± ACRE PARCEL SHOWN IS FROM REFERENCE PLAT "A".

SEE SHEET 1 OF 2 FOR SURVEY NOTES

GRAPHIC SCALE

200 0 100 200 400 800

(IN FEET)
1 inch = 200 ft.

CHARLOTTE TOWN CLERK'S OFFICE
RECEIVED FOR RECORD
This _____ day of _____, 2_____,
at ____ o'clock ____ minutes __M and
recorded in map slide ____ page _____

Attest _____Town Clerk

APPROVED BY RESOLUTION OF THE CHARLOTTE, VERMONT PLANNING COMMISSION, ON THE _____ DAY OF _____, 2_____, SUBJECT TO THE REQUIREMENTS AND CONDITIONS OF SAID RESOLUTION. SIGNED THIS _____ DAY OF _____, 2_____.

BY _____, CHAIRPERSON.

To the best of my knowledge & belief this plat, consisting of two sheets, properly depicts the results of a survey conducted under my direct supervision as outlined in notes above, based upon our analysis of record and physical evidence found. Existing parcel boundaries shown are substantially consistent with the record. This plat is in substantial compliance with 27 VSA 1403. This statement valid only when accompanied by my original signature and seal.

_____
Timothy R. Cowan VT LS 597

Date	By	Revision
02.12.10	TRC	Revised Sewer Easement
01.08.09	TRC	Add Exist. Easements, Revise notations

Drawn by	JB/TRC	Date	OCT. 17, 2009
Checked by		Scale	1" = 200'
Approved by		Project No.	09185

OVERALL VIEW

TOWN of CHARLOTTE's "BURNS PROPERTY"

GREENBUSH ROAD — CHARLOTTE, VERMONT

CIVIL ENGINEERING ASSOCIATES, INC.
10 MANSFIELD VIEW LANE, SOUTH BURLINGTON, VT 05403
802-864-2323 FAX: 802-864-2271 web: www.cea-vt.com
COPYRIGHT © 2010 - ALL RIGHTS RESERVED

SHEET 2
Sheet 2 of 2

P:\AutoCADD Projects\2009\09185-SURVEY\09185-PLAT.dwg, 2/12/2010 1:30:46 PM, aloiselle