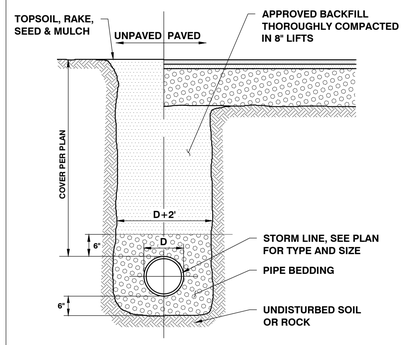

NOTES:

1. COMPACTION OF BACKFILL AND BEDDING SHALL BE A MINIMUM OF 90% (95% UNDER ROADWAY SURFACES) OF MAXIMUM DRY DENSITY DETERMINED IN THE STANDARD PROCTOR TEST (ASTM D698).
2. BEDDING MATERIAL SHALL NOT BE PLACED ON FROZEN SUBGRADE.
3. APPROVED BACKFILL SHALL NOT CONTAIN ANY STONES MORE THAN 12" IN LARGEST DIMENSION (6" IN ROADWAYS, 1 1/2"" MAXIMUM DIAMETER WITHIN 24" OF THE OUTSIDE OF THE PIPE), OR CONTAIN ANY FROZEN, WET, OR ORGANIC MATERIAL.
4. TRENCHES SHALL BE COMPLETELY DEWATERED PRIOR TO PLACING OF PIPE BEDDING MATERIAL AND KEPT DEWATERED DURING INSTALLATION OF PIPE AND BACKFILL.
5. IN TRENCHES WITH UNSTABLE MATERIALS, TRENCH BOTTOM SHALL FIRST BE STABILIZED BY PLACEMENT OF FILTER FABRIC THEN CRUSHED STONE (3/4" MAXIMUM).
6. THE SIDES OF TRENCHES 4' OR MORE IN DEPTH ENTERED BY PERSONNEL SHALL BE SHEETED OR SLOPED TO THE ANGLE OF REPOSE AS DEFINED BY O.S.H.A. STANDARDS.
7. BEDDING MATERIAL SHALL CONSIST OF CRUSHED STONE WITH A MAXIMUM SIZE OF ¾'. SUBMIT A SAMPLE TO THE ENGINEER FOR APPROVAL.

TYPICAL STORM TRENCH

N.T.S.

ST-003 Storm Trench

ST-003 REVISED 08/01/2014

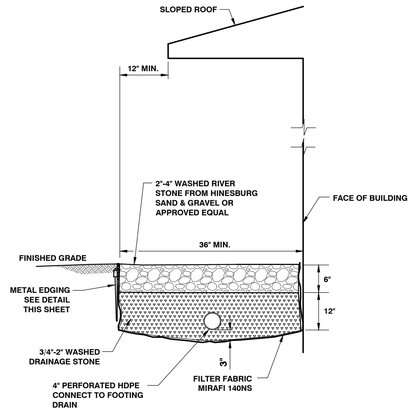

DRIP EDGE TRENCH

N.T.S.

ST-028 Drip Edge Trench

ST-028 REVISED 1/28/2015

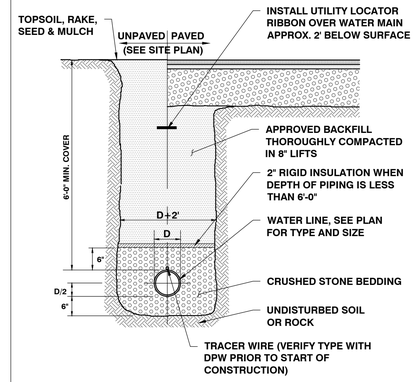

NOTES:

1. COMPACTION OF BACKFILL AND BEDDING SHALL BE A MINIMUM OF 90% (95% UNDER ROADWAY SURFACES) OF MAXIMUM DRY DENSITY DETERMINED IN THE STANDARD PROCTOR TEST (ASTM D698).
2. BEDDING MATERIAL SHALL NOT BE PLACED ON FROZEN SUBGRADE.
3. APPROVED BACKFILL SHALL NOT CONTAIN ANY STONES MORE THAN 12" IN LARGEST DIMENSION (6" IN ROADWAYS, 1 1/2"" MAXIMUM DIAMETER WITHIN 24" OF THE OUTSIDE OF THE PIPE), OR CONTAIN ANY FROZEN, WET, OR ORGANIC MATERIAL.
4. TRENCHES SHALL BE COMPLETELY DEWATERED PRIOR TO PLACING OF PIPE BEDDING MATERIAL AND KEPT DEWATERED DURING INSTALLATION OF PIPE AND BACKFILL.
5. IN TRENCHES WITH UNSTABLE MATERIALS, TRENCH BOTTOM SHALL FIRST BE STABILIZED BY PLACEMENT OF FILTER FABRIC THEN CRUSHED STONE (3/4" MAXIMUM).
6. THE SIDES OF TRENCHES 4' OR MORE IN DEPTH ENTERED BY PERSONNEL SHALL BE SHEETED OR SLOPED TO THE ANGLE OF REPOSE AS DEFINED BY O.S.H.A. STANDARDS.
7. BEDDING MATERIAL SHALL CONSIST OF SAND WITH A MAXIMUM SIZE OF ¾'. SUBMIT A SAMPLE TO THE ENGINEER FOR APPROVAL.
8. CONTRACTOR TO INSTALL TRACER WIRE ALONG ALL SECTIONS OF NEW WATER LINE. TERMINATE TRACER WIRE AT ALL VALVE BOXES AND HYDRANTS. COORDINATE INSTALLATION WITH TOWN AND ENGINEER.

TYPICAL WATER TRENCH DETAIL

N.T.S.

W-001 Trench

W-001 REVISED 12/29/2014

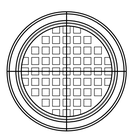

DRAIN AREA = 98.7 SQ. INCH

GRATE HAS H-20 (HEAVY TRAFFIC) DOT RATING

QUALITY: MATERIAL SHALL CONFORM TO ASTM A48 - CLASS 30B

PAINT: CASTINGS ARE FURNISHED WITH A BLACK PAINT

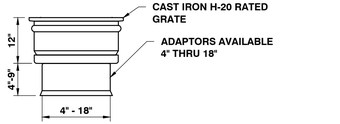

18" INLINE DRAIN

GRATE COVER IS REVERSIBLE; ONE SIDE STICKS OUT AS IS SHOWN ON THE RIGHT. ONE SIDE IS FLUSH AS IS SHOWN ON THE LEFT.

18" CAST IRON GRATE

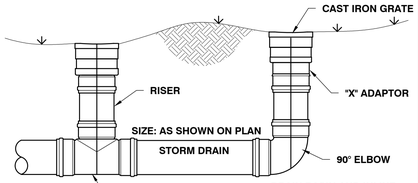

INLINE DRAIN SECTION

YARD DRAIN DETAILS

N.T.S.

ST-008 Yard Drain

ST-008 REVISED 08/01/2014

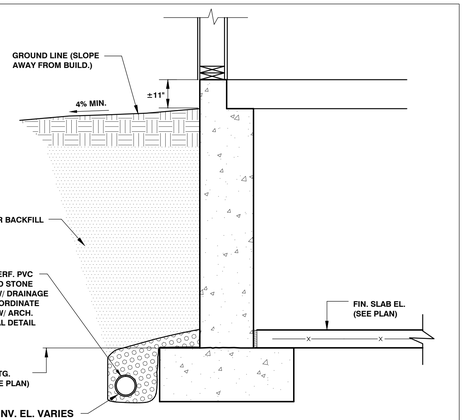

FOUNDATION DRAIN

N.T.S.

ST-020 Foundation Drain

ST-020 REVISED 11/10/2014

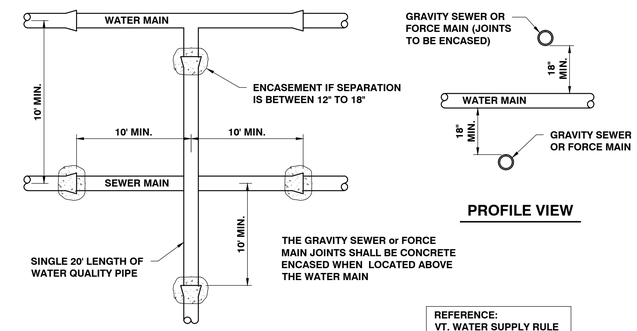

PROFILE VIEW

PLAN VIEW

REFERENCE:
VT. WATER SUPPLY RULE CHAPTER 21, APPENDIX A, SECTION 8.6

WATER/SEWER CROSSING

N.T.S.

W-007 Water-Sewer Crossing

W-007 REVISED 6/15/2015

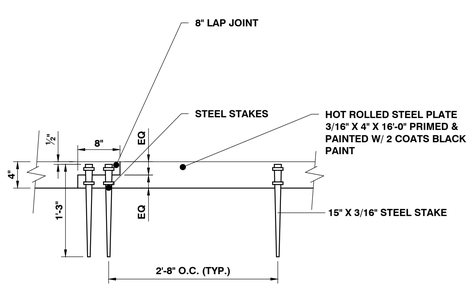

METAL EDGING

N.T.S.

REVISED 03/09/2016

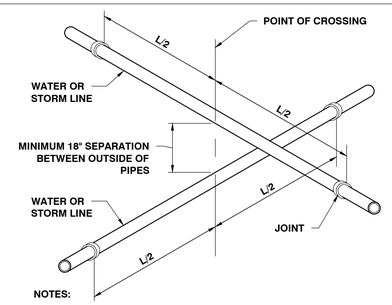

NOTES:

1. AT CROSSINGS, ONE FULL LENGTH OF WATER/STORM PIPE SHALL BE LOCATED SO BOTH JOINTS WILL BE AS FAR FROM THE WATER/STORM AS POSSIBLE.
2. IF THE STORM MAIN IS OVER THE WATER MAIN, THE FIRST STORM PIPE JOINTS ON EACH SIDE OF THE WATER MAIN MUST BE CONCRETE ENCASED. SPECIAL STRUCTURAL SUPPORT FOR THE WATER AND STORM PIPES MAY BE REQUIRED.
3. WHERE IT IS IMPOSSIBLE TO MAINTAIN THE 18" SEPARATION, THE STORM MATERIALS SHALL BE WATER MAIN PIPE OR EQUIVALENT AND SHALL BE PRESSURE TESTED TO WATER MAIN STANDARDS.
4. WATER MAINS AND STORM LINES OR MANHOLES SHALL HAVE AT LEAST 10' HORIZONTAL SEPARATION. THIS DISTANCE SHALL BE MEASURED EDGE TO EDGE.

WATER/STORM CROSSING

N.T.S.

W-007A Water-Storm Crossing

W-007A REVISED 12/23/2014

SITE ENGINEER:

CIVIL ENGINEERING ASSOCIATES, INC.
10 MANSFIELD VIEW LANE, SOUTH BURLINGTON, VT 05403
802-864-2323 FAX: 802-864-2271 web: www.cea-vt.com

COPYRIGHT © 2016 – ALL RIGHTS RESERVED

DRAWN: SAL
CHECKED: DSM
APPROVED: DSM

OWNER:

PHILO RIDGE, L.L.C.

2766 MT. PHILO RD.
CHARLOTTE, VT.

PROJECT:

SITE IMPROVEMENTS

2766 MT. PHILO RD.
CHARLOTTE, VT.

DATE	CHECKED	REVISION

WATER & STORM DETAILS

DATE: OCT., 2016
SCALE: AS SHOWN
PROJ. NO.: 16107

DRAWING NUMBER: C2.1