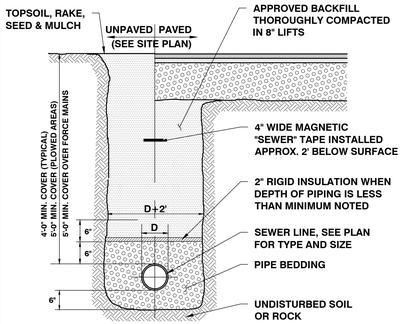

NOTES:

1. COMPACTION OF BACKFILL AND BEDDING SHALL BE A MINIMUM OF 90% (95% UNDER ROADWAY SURFACES) OF MAXIMUM DRY DENSITY DETERMINED IN THE STANDARD PROCTOR TEST (ASTM D698).
2. BEDDING MATERIAL SHALL NOT BE PLACED ON FROZEN SUBGRADE.
3. APPROVED BACKFILL SHALL NOT CONTAIN ANY STONES MORE THAN 12" IN LARGEST DIMENSION (6" IN ROADWAYS, 1 1/2" MAXIMUM DIAMETER WITHIN 24" OF THE OUTSIDE OF THE PIPE), OR CONTAIN ANY FROZEN, WET, OR ORGANIC MATERIAL.
4. TRENCHES SHALL BE COMPLETELY DEWATERED PRIOR TO PLACING OF PIPE BEDDING MATERIAL AND KEPT DEWATERED DURING INSTALLATION OF PIPE AND BACKFILL.
5. IN TRENCHES WITH UNSTABLE MATERIALS, TRENCH BOTTOM SHALL FIRST BE STABILIZED BY PLACEMENT OF FILTER FABRIC THEN CRUSHED STONE (3/4" MAXIMUM).
6. THE SIDES OF TRENCHES 4' OR MORE IN DEPTH ENTERED BY PERSONNEL SHALL BE SHEETED OR SLOPED TO THE ANGLE OF REPOSE AS DEFINED BY O.S.H.A. STANDARDS.
7. BEDDING MATERIAL FOR WASTEWATER LINES SHALL CONSIST OF CRUSHED STONE OR CRUSHED GRAVEL WITH A MAXIMUM SIZE OF ¾". SUBMIT A SAMPLE TO THE ENGINEER FOR APPROVAL.
8. ALL JOINTS TO BE INSPECTED BY OWNER/ENGINEER/TOWN PRIOR TO BACKFILL.

TYPICAL SEWER TRENCH DETAIL

N.T.S.

SWR-001 Trench

SWR-001 REVISED 12/29/2014

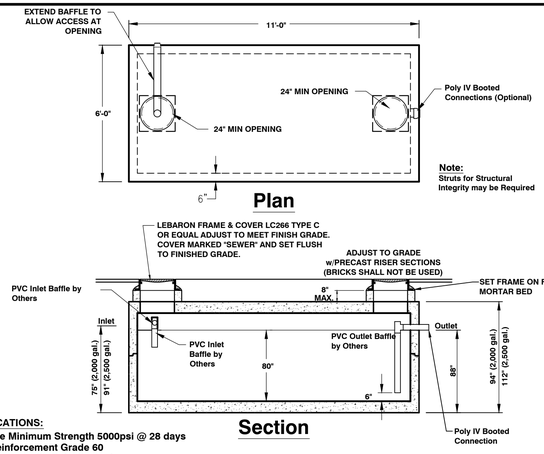

Note: Struts for Structural Integrity may be Required

SPECIFICATIONS:
- Concrete Minimum Strength 5000psi @ 28 days
- Steel Reinforcement Grade 60
- Joints Sealed with Butyl Sealant
- Inlet and Outlet Baffles by Others
- Provide H20 Loading
- (*) Denotes Top Seam
- Weights Subject to Variation

NOTE: SUPPLIER TO PROVIDE STRUCTURAL DESIGN.

5' X 10' HEAVY DUTY GREASE TRAP (2,000 or 2,500 GALLONS)

N.T.S.

	Horizontal Distance (Feet)		
	Leach field	Septic Tank	Sewer
Drilled Well Serving 1 Home - Up Slope of Disposal Field	100 (Min.)[1]	50	50
Drilled Well Serving 1 Home - Down Slope of Disposal Field	200 (Min.)	50	50
Shallow Well or Spring, Up Slope of Disposal Field	150 (Min.)[1]	75	75
Shallow Well or Spring, Down Slope of Disposal Field	500 (Min.)[1]	75	75
Lakes, Ponds and Impoundment	50	25	25
Rivers, Streams	50	25	10
Drainage Swales, Roadway Ditches	25	-	-
Municipal Water Main	50	50	10
Service Water Lines	25	25	10
Roadways, Driveways, Buildings	10	5	5[4]
Top of embankment or slope > 30%	25	10	-
Property Line	10 (25 Downslope)[2]	10	10
Trees	10	10	10
Replacement Area	10	-	-
Foundation, Footing Drains	35 (75 Downslope)[3]	10	-

1. Isolation distances to well locations may vary due to site conditions - contact Engineer for verification with the Vermont Water Supply Rule Regulations.
2. For mound disposal systems, the limit of mound fill must be 25 feet from any downhill property line and 10 feet from side or uphill property lines.
3. If a curtain or foundation drain is downslope of the leach field, the leach field cannot be closer than 75 feet to the drain. If the drain is upslope of the leach field, it shall be 35' if possible and 20' minimum.
4. Sewers under roads, driveways or parking lots may require protective conduits or sleeves.

MINIMUM ISOLATION DISTANCES

(CONTACT ENGINEER FOR ANY CLARIFICATIONS OR CONFLICTS)

WR-100 Sewer Iso

SWR-100 REVISED 08/01/2014

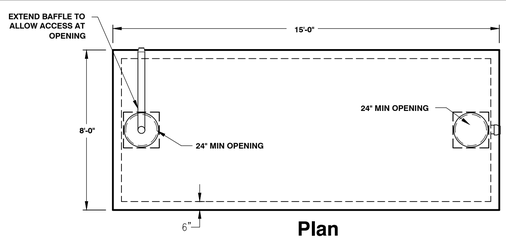

Note: Struts for Structural Integrity may be Required

GENERAL NOTES:
- ALL TANKS TO BE WATER-PROOF w/ BOOTED CONNECTIONS
- INLET & OUTLET RISERS REQUIRED

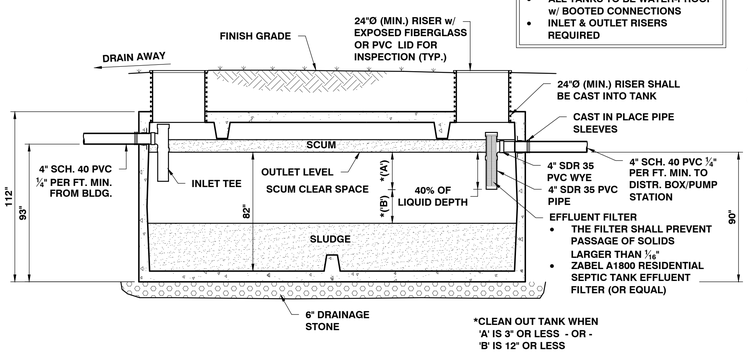

5,000 gal. SEPTIC TANK

N.T.S.

SWR-015 1000 Septic

SWR-015 REVISED 10/17/2014

Septic Tank Notes

1. Septic tank shall be a precast concrete tank, unless otherwise approved.
2. Maintenance
   - At least once a year, the depth of sludge and scum in the septic tank should be measured. The tank should be pumped if
   - The sludge is closer than twelve inches to the outlet baffle or;
   - The scum layer is closer than three inches to the outlet baffle.
   - Under no circumstances should anyone enter a septic tank.
3. Recommendations
   - The use of garbage grinders is discouraged as sludge accumulation in the septic tank can be increased by up to 40%. If used, the septic tank will require more frequent pumping.
   - The septic system is designed to handle human waste and toilet paper, plus water from plumbing fixtures such as toilets, baths and sinks. Moderate use of household cleaners, detergents and bleach should not damage your system; however, indiscriminate use may cause problems. Non-degradable paper products and any other non-biodegradable substances should not be put in your wastewater system.
   - Minimize the amount of water used in the household. Excessive water could flush solids from the septic tank to the disposal field which leads to clogging or plugging of the piping. When dishwashers and washers are used, make sure loads are full and stagger their use to reduce peak flows, i.e. stagger loads of laundry over several days instead of one day.
4. Walkways, patios and decks or other permanent structures should not be constructed over the septic tank.
5. There should be no need to use commercial "starter", "bacterial feeds", or "cleaners", etc. Bacteria in a septic tank system occurs naturally.

PUMP STATION / SEPTIC TANK TESTING

The tanks shall be tested by the following procedure and in conformance with the State of Vermont - Environmental Protection Rules:

1. Exfiltration Leakage Test: All pipes and other openings into the tank shall be suitably plugged and the plugs braced to prevent blowout. The tank shall then be filled with water to the top of the riser section. A period of time may be permitted, if the Contractor so wishes, to allow for absorption. At the end of this period, the tank shall be refilled to the top of the riser, if necessary, and the measuring time of at least four hours begun. At the end of the test period, the tank shall be refilled to the top of the riser, measuring the volume of water added. This amount shall be converted to gallons per vertical foot depth for 24 hours. The leakage for each tank shall not exceed four gallon/vertical foot/day. If leakage exceeds the allowable rate, repairs shall be made as approved by the Engineer and the tank retested. If the Contractor elects to backfill prior to testing, the testing shall be at his own risk, and it shall be incumbent upon the Contractor to determine the reason for any failure of the test. No adjustment in the leakage allowance will be made for unknown causes such as leaking plugs, absorption, etc. It will be assumed that all loss of water during the test is a result of leaks through the joints or through the concrete. Furthermore, the Contractor shall take any steps necessary to assure the Engineer that the water table is below the bottom of the tank throughout the test.

OR

2. Vacuum test in accordance with ASTM C1227-03, Standard Specification for Precast Concrete Septic Tanks, except as noted below:
   - seal the empty tank and apply a vacuum to 5 inches (100mm) of mercury. The tank is approved if 90% of vacuum is held for 5 minutes.

SWR-103-Tank Testing Notes

SWR-103 REVISED 10/17/2014

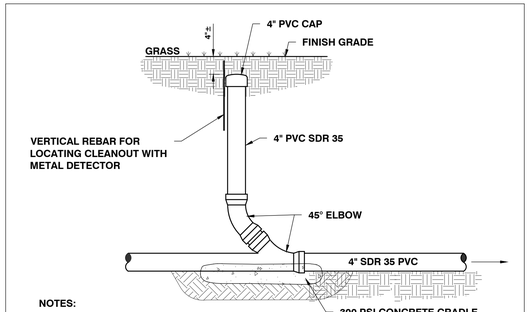

NOTES:

1. CONTRACTOR SHALL PROVIDE TWO TIES TO ALL BURIED C.O.'s ON THE AS-BUILT PLANS SUBMITTED TO THE OWNER.
2. CLEANOUT TO BE INSTALLED AT INTERVALS OF NOT MORE THAN 100 FEET, AND UPSTREAM OF BEND(S) IN BUILDING SEWER(S) WHEN CHANGE IN PIPE DIRECTION EXCEEDS 45° (USE LONG SWEEP FITTINGS WHEN EXCEEDING 45°)

TYPICAL CLEANOUT DETAIL

N.T.S.

SWR-009 CO Pvc/Rebar

SWR-009 REVISED 10/07/2015

SITE ENGINEER:

CIVIL ENGINEERING ASSOCIATES, INC.
10 MANSFIELD VIEW LANE, SOUTH BURLINGTON, VT 05403
802-864-2323 FAX: 802-864-2271 web: www.cea-vt.com

COPYRIGHT © 2016 – ALL RIGHTS RESERVED

DRAWN: SAL
CHECKED: DSM
APPROVED: DSM

OWNER:

PHILO RIDGE, L.L.C.

2766 MT. PHILO RD.
CHARLOTTE, VT.

PROJECT:

SITE IMPROVEMENTS

2766 MT. PHILO RD.
CHARLOTTE, VT.

DATE	CHECKED	REVISION

SEWER DETAILS

DATE: OCT., 2016
SCALE: AS SHOWN
PROJ. NO.: 16107

DRAWING NUMBER: C2.2