Precast Pumpstation

Standard 1000 Gallon (1000PSB)

Total Weight : 10170 lbs

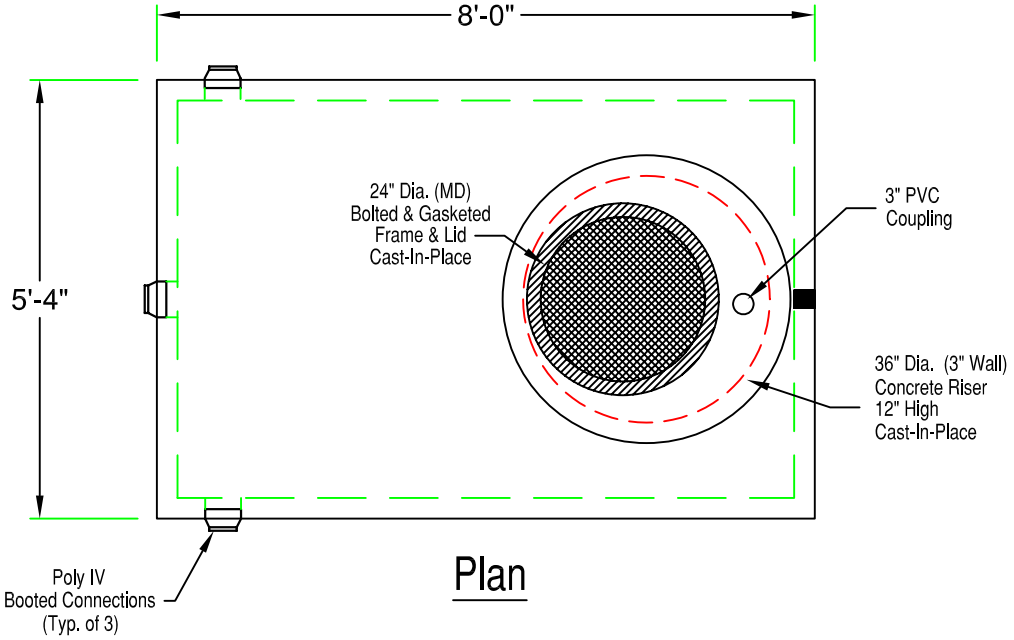

Plan

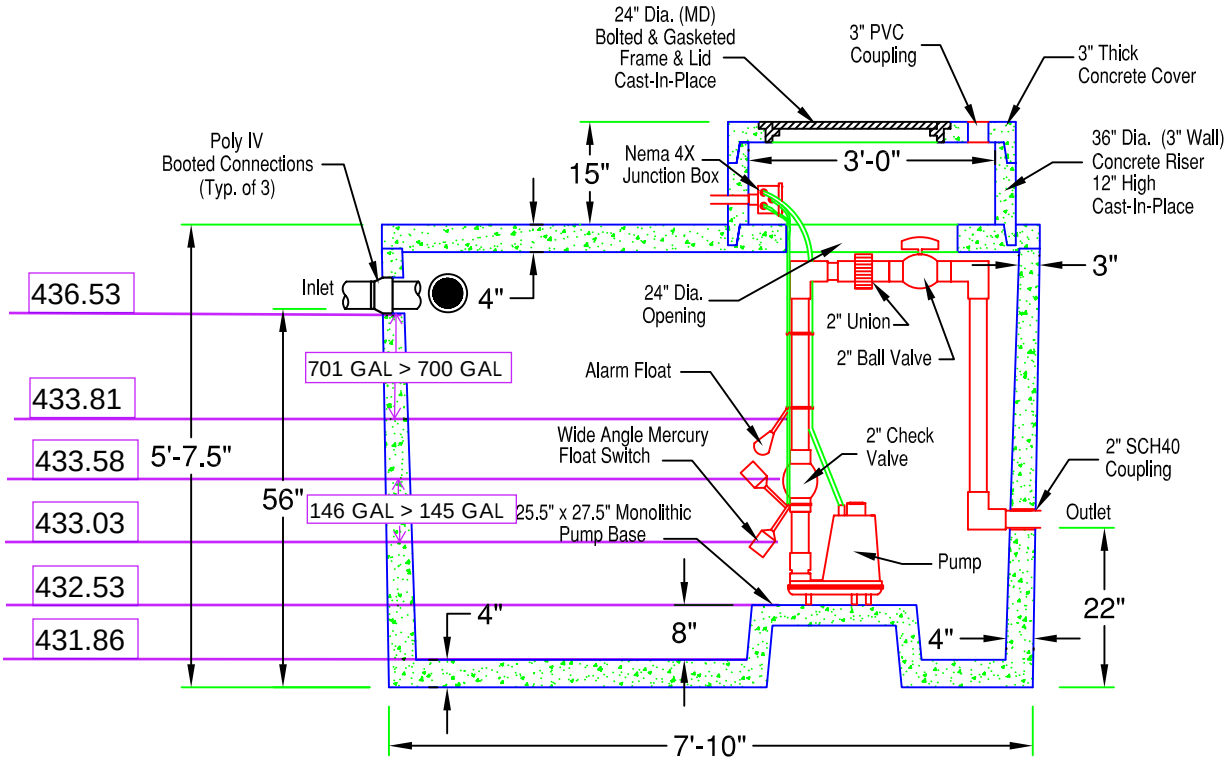

Section

SPECIFICATIONS:

- Concrete Minimum Strength 5000psi @ 28 days
- Steel Reinforcement Grade 60
- Poly IV Booted Connections
- Top Seam Construction
- Weights Subject to Variation

PRECAST CONCRETE PRODUCTS
78 PRECAST ROAD MILTON, VT 05468 •802.893.2401
TOLL FREE 1.888.299.2401 FAX 802.893.1542