LINCOLN
APPLIED GEOLOGY, INC.
Environmental Consultants

1984 - 2009
25
YEARS OF
EXCELLENCE
LINCOLN APPLIED
GEOLOGY, INC.

May 3, 2010

Mrs. Nancy Barnes
1508 Ethan Allen Highway
Charlotte, VT 05445

RE: Replacement Wastewater Disposal System Permit Application

Dear Mrs. Barnes:

Enclosed, you will find the completed wastewater disposal system plans and the Town of Charlotte wastewater permit application for your review. Please sign and date the permit application where indicated, attach a check for $250.00 made payable to the Town of Charlotte, and then forward the application package to the Town Office in the enclosed envelope. The additional two copies are for your records and for your contractors use.

If you have any questions, or if we can provide further assistance, please contact me directly at (800) 477-4384.

Respectfully,
Lincoln Applied Geology, Inc.

Elias J. Erwin
Licensed Class B Designer #503

EE/SR/hr

Enclosures

F:\CLIENTS\2010\10021\WW System Design\Client Cover Ltr.doc

163 Revell Road • Lincoln, VT 05443 • (802) 453-4384 • FAX (802) 453-5399

LINCOLN
APPLIED GEOLOGY, INC.
Environmental Consultants

1984 - 2009
25
YEARS OF
EXCELLENCE
LINCOLN APPLIED
GEOLOGY, INC.

May 3, 2009

Mr. Thomas Mansfield, Zoning Administrator
Mr. Spencer Harris, Septic Consultant
Town of Charlotte
P.O. Box 119
Charlotte, VT 05455

RE: Barnes Property –Replacement Wastewater Disposal System – 1508 Ethan Allen Highway, Charlotte, Vermont

Dear Mr. Mansfield and Mr. Harris:

Enclosed you will find a design summary along with associated attachments for the above referenced property together with a complete permit application, and 2 copies of the Site Plan and Wastewater Disposal System Details.

If you have any questions regarding the content of this letter or if we can provide additional information regarding this permit application, please contact me at (800) 477-4384.

Respectfully,
Lincoln Applied Geology, Inc.

Elias Erwin
Licensed Class B Designer #503

EE/hr
Enclosures

F:\CLIENTS\2009\09067\WW PERMIT APPLICATION\STATE COVER LTR.DOC

163 Revell Road • Lincoln, VT 05443 • (802) 453-4384 • FAX (802) 453-5399

LINCOLN
APPLIED GEOLOGY, INC.
Environmental Consultants

1984 - 2009
25
YEARS OF
EXCELLENCE
LINCOLN APPLIED
GEOLOGY, INC.

May 3, 2010

Mr. Thomas Mansfield, Zoning Administrator
Mr. Spencer Harris, Septic Consultant
Town of Charlotte
P.O. Box 119
Charlotte, VT 05445

RE: Barnes Property - Replacement Wastewater Disposal System - 1508 Ethan Allen Highway, Charlotte, Vermont

Dear Mr. Mansfield and Mr. Harris:

On April 13, 2010, I performed a site and soil evaluation at the abovementioned address to locate an area suitable for a complying replacement wastewater disposal system. The subject property is a ±2.2 acre lot owned by John and Nancy Barnes. The parcel is developed with a five (5) bedroom year-round single family residence (SFR) served by an on-site drilled bedrock water supply well and on-site septic. Currently the wastewater disposal system consists of a 1,000 gallon capacity concrete septic tank that discharges to a failing in-ground stone absorption bed. The proposed replacement mound-type wastewater disposal system is described below in greater detail.

The initial result of the site and soil evaluation performed on April 13, 2010 indicates that the ±2.2 acre parcel is elevated with site topography gently sloping toward the west. Fortunately, the backyard provides a uniform slope of 6%-8% with adequate area available to potentially site a complying replacement system. Therefore, this area was targeted for evaluation.

A total of seven (7) test pits were installed on the subject property and the location of each test pit is shown on Plan Sheet 1. A detailed description of the soils observed is included as Attachment A. Review of the test pit log indicates that 21”-28” of a well drained dark brown stony sandy loam and brown stony fine sandy loam overlies grey clays and silt. Evidence of seasonal high water table in the form of mottles was observed at 14” below ground surface (BGS). No ledge was encountered during our soil evaluation to a maximum depth of 52” BGS; however, ground water was encountered in each test pit at a minimum depth of 32” BGS. Two percolation tests were conducted, one in Test Pit 2 (TP-2) and the other in TP-6. Both tests were conducted at a depth of 14”-16” BGS. The observed percolation rates equal 13.5 minutes/inch (min/in) and 15.0 min/in, respectively. An application rate of 1.0 gpd/ft^2 and a basal application rate of 0.74 gpd/ft^2 will be used for the basis of our design. The percolation test results are presented as Attachment B. Based on the results of our site and soil evaluation, a fully complying performance based mound type disposal system was defined to adequately address the site and soil conditions. The site location, property dimensions, test pit and percolation test locations, disposal system layout, and wastewater design details are shown on Plan Sheets 1 and 2.

163 Revell Road • Lincoln, VT 05443 • (802) 453-4384 • FAX (802) 453-5399

The proposed replacement wastewater disposal system will require wastewater to continue to flow by gravity from the house to the existing 1,000 gallon concrete septic tank (to be retrofit with an effluent filter) and then to gravity flow to the proposed 1,000 gallon pump station. A submersible effluent pump capable of discharging wastewater at 21.31 gallons per minute (gpm) against 11.5' of total dynamic head (TDH) is required in order to provide equal distribution through the proposed 5.6' x 100' mound type disposal system. The proposed mound dimension details, an acceptable submersible effluent pump model and the results of the site-specific mounding analysis are included in Attachment C. The proposed mound system provides 560 ft^2 of application area which satisfies the application area requirement. The basal application rate of 0.74 gpd/ft^2 requires 757 ft^2. Our design satisfies this with a proposed basal area of 1833 ft2.

Accompanying this letter is a signed Wastewater Permit Application with a permit fee of $250.00, 2 full scale copies of the Plan Sheets 1 and 2, 1 reduced (11" x 17") copy of Plan Sheet 1 and 2, one copy of this letter and the attachments, and 1 CD of the complete package. We look forward to your expeditious review as Mr. and Mrs. Barnes would like to proceed with the installation of the subject replacement wastewater disposal system as soon as possible.

If you have any questions or if we can provide additional information regarding the content of this permit application, please contact me directly at (800) 477-4384.

Respectfully,
Lincoln Applied Geology, Inc.

Elias J. Erwin
Licensed Class B Designer #503

EE/SR/SK:lm

cc: Mr. and Mrs. Barnes

Enclosures

F:\CLIENTS\2010\10021\WW System Design\State Summary Letter.doc

ATTACHMENT A

Test Pit Results

Barnes Property
Test Pits
By Elias J. Erwin, Licensed Class B Designer #503
April 13, 2010

Test Pit #1 (TP-1)

0-14" Dark brown stony sandy loam, loose, strong crumb structure, many medium to fine roots, well drained.

14-28" Brown stony fine sandy loam, loose to friable, moderate crumb structure, many fine roots, mottles present below 14”.

28-52” Grey silt loam, friable to firm, weak blocky structure, poorly drained and heavily mottled. Ground water at 51” no ledge to depth.

Test Pit #2 (TP-2)

0-13" Dark brown stony sandy loam, loose, strong crumb structure, many medium to fine roots, well drained.

13-21" Brown stony fine sandy loam, loose to friable, moderate crumb structure, many fine roots, mottles present below 14”.

21-36" Grey silt loam, friable to firm, weak blocky structure, poorly drained and heavily mottled. Ground water at 32” no ledge to depth.

Test Pit #3 (TP-3)

0-14" Dark brown stony sandy loam, loose, strong crumb structure, many medium to fine roots, well drained.

14-25" Brown stony fine sandy loam, loose to friable, moderate crumb structure, many fine roots, mottles present below 14”.

24-36" Grey silt loam, friable to firm, weak blocky structure, poorly drained and heavily mottled. Ground water at 34” no ledge to depth.

Test Pit #4 (TP-4)

0-14" Dark brown stony sandy loam, loose, strong crumb structure, many medium to fine roots, well drained.

14-28" Brown stony fine sandy loam, loose to friable, moderate crumb structure, many fine roots, mottles present below 14”.

28-49" Grey silt loam, friable to firm, weak blocky structure, poorly drained and heavily mottled. Ground water at 45” no ledge to depth.

Test Pit #5 (TP-5)

0-13" Dark brown stony sandy loam, loose, strong crumb structure, many medium to fine roots, well drained.

13-22" Brown stony fine sandy loam, loose to friable, moderate crumb structure, many fine roots, mottles present below 14”.

22-34" Grey silt loam, friable to firm, weak blocky structure, poorly drained and heavily mottled. Ground water at 32” no ledge to depth.

Test Pit #6 (TP-6)

0-13" Dark brown stony sandy loam, loose, strong crumb structure, many medium to fine roots, well drained.

13-23" Brown stony fine sandy loam, loose to friable, moderate crumb structure, many fine roots, mottles present below 14”.

23-35" Grey silt loam, friable to firm, weak blocky structure, poorly drained and heavily mottled. Ground water at 32” no ledge to depth.

Test Pit #7 (TP-7)

0-13" Dark brown stony sandy loam, loose, strong crumb structure, many medium to fine roots, well drained.

13-22" Brown stony fine sandy loam, loose to friable, moderate crumb structure, many fine roots, mottles present below 14”.

22-34" Grey clay loam, friable to firm, weak blocky structure, poorly drained and heavily mottled. Ground water at 32” no ledge to depth.

ATTACHMENT B

Percolation Test Results

Barnes Property
1508 Ethan Allen Highway
Charlotte, Vermont
Percolation Test Results
All tests were performed on April 13, 2010 at a depth of 14"-16"

PT-1	Drop Time (min)	Total Drop Time (min)	Total Drop (inches)	Drop Rate (min/inch)
	3.6	3.6	1	3.6
	6.5	10.1	2	5.1
	7.6	17.8	3	5.9
	8.4	26.2	4	6.5
	8.9	35.1	5	7.0
	9.3	44.4	6	7.4
	9.7	54.1	7	7.7
	---	**1440.0**	---	**13.5**

PT-2	Drop Time (min)	Total Drop Time (min)	Total Drop (inches)	Drop Rate (min/inch)
	4.2	4.2	1	4.2
	7.5	11.7	2	5.8
	8.7	20.4	3	6.8
	9.5	29.9	4	7.5
	10.1	40.0	5	8.0
	10.6	50.6	6	8.4
	11.0	61.6	7	8.8
	---	**1440.0**	---	**15.0**

*NOTE:
Drop time includes fill time for each of the seven runs.

Table 1

Barnes Property

1508 Ethan Allen Highway
Charlotte, Vermont
Percolation Test Results

All tests were performed on April 13, 2010 at a depth of 14" - 16"

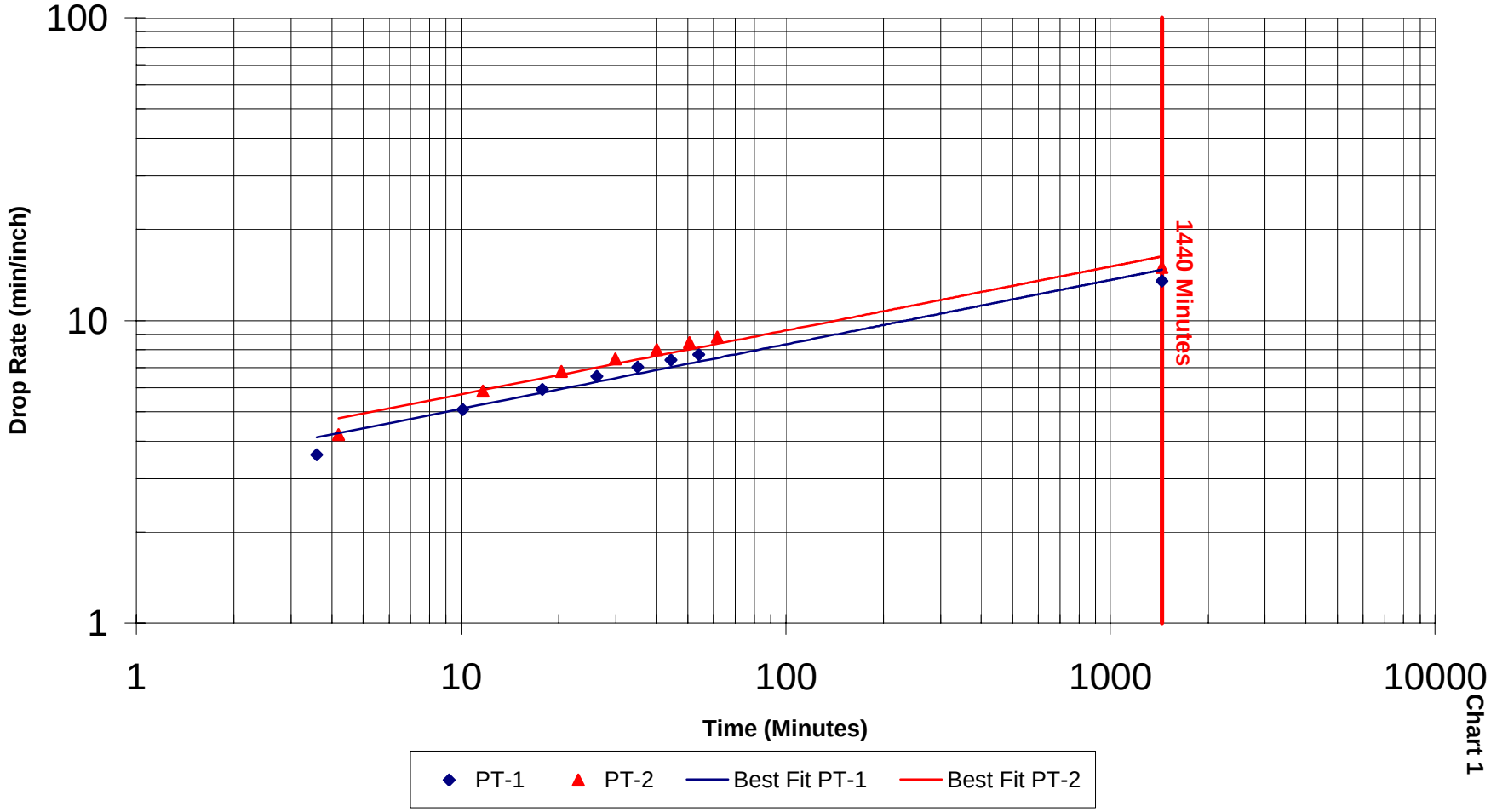

Chart 1

ATTACHMENT C

Site Specific Disposal System Design Calculations
with
Pressure Distribution and Mound Dimension Details
and
Hydromatic Submersible Effluent Pump

Site Specific Disposal System Design Calculations
Barnes Property
1508 Ethan Allen Highway
Charlotte, Vermont 05445

In order to support the proposed mound-type system design and show that the soils can accommodate the design flow rate associated with a year-round five-bedroom residence; LAG conducted a site specific hydraulic analysis using Darcy's Law. The following formula was used to determine the ability of the soil to accept the proposed amount of wastewater and its potential impact on the shallow ground water system in addition to calculating the required height of mound sand.

Using the equation:

$Q = k \cdot i \cdot h \cdot l$ Where: Q= Volume= 560 gallons/ day = 74.9.2 $ft.^3$/ day;
k= Permeability= 40 ft./ day (for sandy loam with weak to moderate crumb structure);
i= Gradient = 6% = 0.06 ft./ ft.;
h= Height of effluent mound in feet;
l= Length of application area = 100 ft.

When solving this equation for h, we calculate a mound height of 0.31'. Evidence of seasonal high ground water was observed at 14" below ground surface (BGS) or alternatively expressed in feet as 1.17' BGS. Therefore, using Darcy's Law, we are able to determine the height of sand fill required below the stone bed. The required vertical separation from ground water is 3.0', minus 1.17' (the depth to seasonal high ground water), equals 1.83', subtract the induced hydraulic mounding (0.31') and the result equals 1.52' of vertical separation. Therefore, 1.48' of State approved mound sand is required for the proposed replacement wastewater disposal system in order to maintain 3' of vertical separation from the induced water table.

PRESSURE DISTRIBUTION & MOUND DIMENSION DETAILS

CLIENT'S NAME: Barnes
DATE: 4/29/2010

PERFORMED BY: Elias J. Erwin, LCBD #503
LAG Project # 10021

Design Flow Rate	560	GPD
Width of Distribution Stone Bed/Trench	5.6	FEET
Length of Distribution Stone Bed/Trench	100	FEET
Thickness of Sand Beneath Distribution Stone Bed/Trench	1.48	FEET
Thickness of Stone Beneath Laterals	6	INCHES
Soil Cover Thickness at Edge of Level Area	12	INCHES
Front Slope of Finished Mound	33	PERCENT
Side and Rear Slope of Finished Mound	33	PERCENT
Percolation Rate	15	MPI
Natural Ground Slope	6	PERCENT
Thickness of Sand on Upper Side of Level Area	2.17	FEET
Thickness of Sand on Lower Side of Level Area	2.63	FEET
Width of Level Area	7.6	FEET
Length of Level Area	102	FEET
Area of Distribution Stone Bed/Trench	560	SQUARE FT
Volume of Stone Required	13	CUBIC YARDS
Proposed Basal Area	1833	SQUARE FEET
Volume of Mound Sand Required	218.2	CUBIC YARDS
Number of Laterals .	2	
Length of Each Lateral	46	FEET
Number of Orifices in the Manifold	0	
Number of Orifices in Each Lateral	12	
Distance Between Manifold and First Orifice	2	FEET
Distance Between Orifices (on center)	4	FEET
Distribution Area per Orifice	23.33	SQ. FT.
Design Pressure Head	5	FEET
Diameter of Orifices (enter as fraction)	0.188	INCHES
Elevation From Pump Intake to Laterals (0 if siphon)	4	FEET
Diameter of Force Main	1.5	INCHES
Length of Force Main	52	FEET
Length of Manifold to Lateral	0	FEET
Diameter of Manifold Pipe	1.5	INCH
Diameter of Lateral Pipe	1.5	INCH
Friction Loss in Force Main	2.21	FEET
Friction Loss in Manifold	0.00	FEET
Friction Loss in Section 1	0.02	FEET
Friction Loss in Entire Lateral	0.17	FEET
Discharge Rate at First Orifice	0.93	GPM
Discharge Rate at Last Orifice	0.91	GPM
Percent Difference in Flow Rate First to Last Orifice	1.51	PERCENT

PRESSURE DISTRIBUTION & MOUND DIMENSION DETAILS

CLIENT'S NAME: Barnes
DATE: 4/29/2010

PERFORMED BY: Elias J. Erwin, LCBD #503
LAG Project # 10021

DIMENSIONS OF MOUND SYSTEM

Dimensions of Mound Sand

5.6 feet from level area to uphill sand toe

7.9 ft corner of level area to upper toe corner

7.6 ft wide level area

6.6 ft to side toe from upper edge of level area

5.6 ft wide stone bed/trench
100 ft long stone bed/trench

8.0 ft to side toe from lower edge of level area

102 ft long level area

13.8 ft corner of level area to lower toe corner

9.7 feet from level area to downhill sand toe

Dimensions of Final Cover

8.1 feet from level area to uphill toe

11.5 ft corner of level area to upper fill toe

9.6 ft to side toe from upper edge of level area

7.6 ft wide level area

102 ft long level area

11.0 ft to side toe from lower edge of level area

19.0 ft corner of level area to lower fill toe

13.4 feet from level area to downhill toe

PLOW AREA LAYOUT MEASUREMENTS

Center of Bed/Trench to Downslope Toe	66.7	feet
End of Level Area @ Midpoint to Downslope Toe	21.8	feet
Center of Bed/Trench to Upslope Toe	60.3	feet
End of Level Area @ Midpoint to Upslope Toe	14.4	feet

HYDROMATIC®

SHEF30

Submersible Effluent Pump

- Effluent Septic Tank

  Automatic operation features easily adjustable, wide-angle float switch with a piggyback plug-in arrangement that allows for simple conversion to manual operation. Special inlet design allows pump to handle 3/4” solids. Cast iron body and an oil-filled motor provide superior cooling characteristics for longer pump life. Motor windings contain automatic thermal overload protection. Energy efficient .3 HP motor pumps up to 35 GPM at 10' total dynamic head. Discharge is 1-1/2" N.P.T.

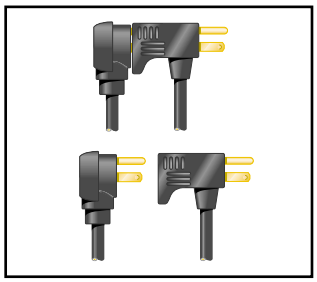

May be operated manually or automatically with a piggyback switch.

HYDROMATIC®
Pentair Pump Group

SHEF30 - Submersible Effluent Pump

Details

Pump Characteristics

Pump/Motor Unit	Submersible
Automatic Model	SHEF30A1
Horsepower	.30
Full Load Amps	8.0
Motor Type	Shaded Pole (4 pole)
R.P.M.	1550
Phase Ø	1
Voltage	115
Hertz	60
Temperature	120°F Ambient
NEMA Design	A
Insulation	Class A
Discharge Size	1-1/2" NPT (38mm)
Solids Handling	3/4" (19mm)
Unit Weight	30 lbs.
Power Cord	18/3, SJTW, 20' std.

Materials of Construction

Handle	Stainless Steel
Lubricating Oil	Dielectric Oil
Motor Housing	Cast Iron
Pump Volute	Cast Iron
Shaft	Steel
Mechanical Shaft Seal	Seal Faces: Carbon/Ceramic Seal Body: Anodized Steel Spring: Stainless Steel Bellows: Buna-N
Impeller	Engineered Thermoplastic
Upper Bearing	Cast Iron Sleeve
Lower Bearing	Single Row Ball Bearing
Legs	Engineered Thermoplastic
Fastener	Stainless Steel

Performance Data

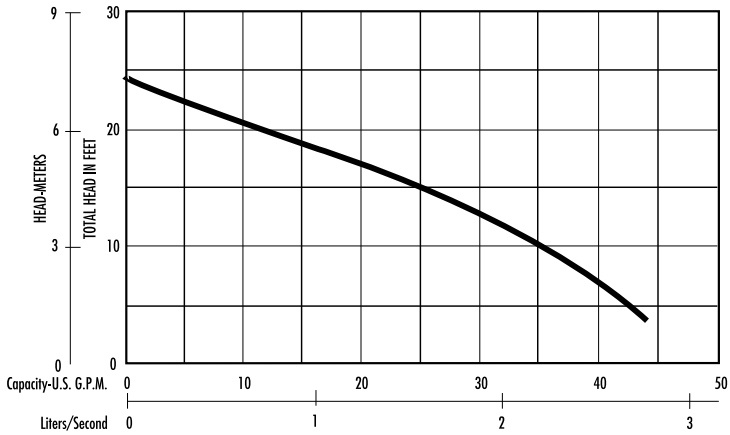

Dimensional Data

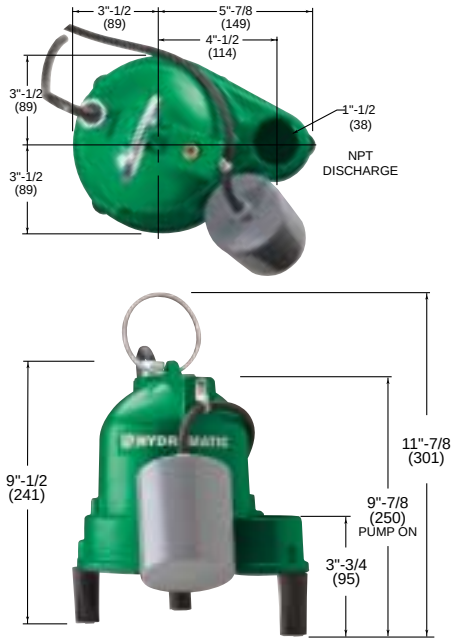

All dimensions in inches. Metric for international use. Component dimensions may vary ± 1/8 inch. Dimensional data not for construction purpose unless certified. Dimensions and weights are approximate. On/Off level adjustable. We reserve the right to make revisions to our product and their specifications without notice.

HYDROMATIC®
Pentair Pump Group

—Your Authorized Local Distributor —

USA
1840 Baney Road Ashland, Ohio 44805
Tel: 419-289-3042 Fax: 419-281-4087

www.hydromatic.com

CANADA
269 Trillium Drive Kitchener, Ontario, Canada N2G 4W5
Tel: 519-896-2163 Fax: 519-896-6337

© 2000 Hydromatic® Ashland, Ohio. All Rights Reserved.

Item #: W-02-6350 7/00 8M

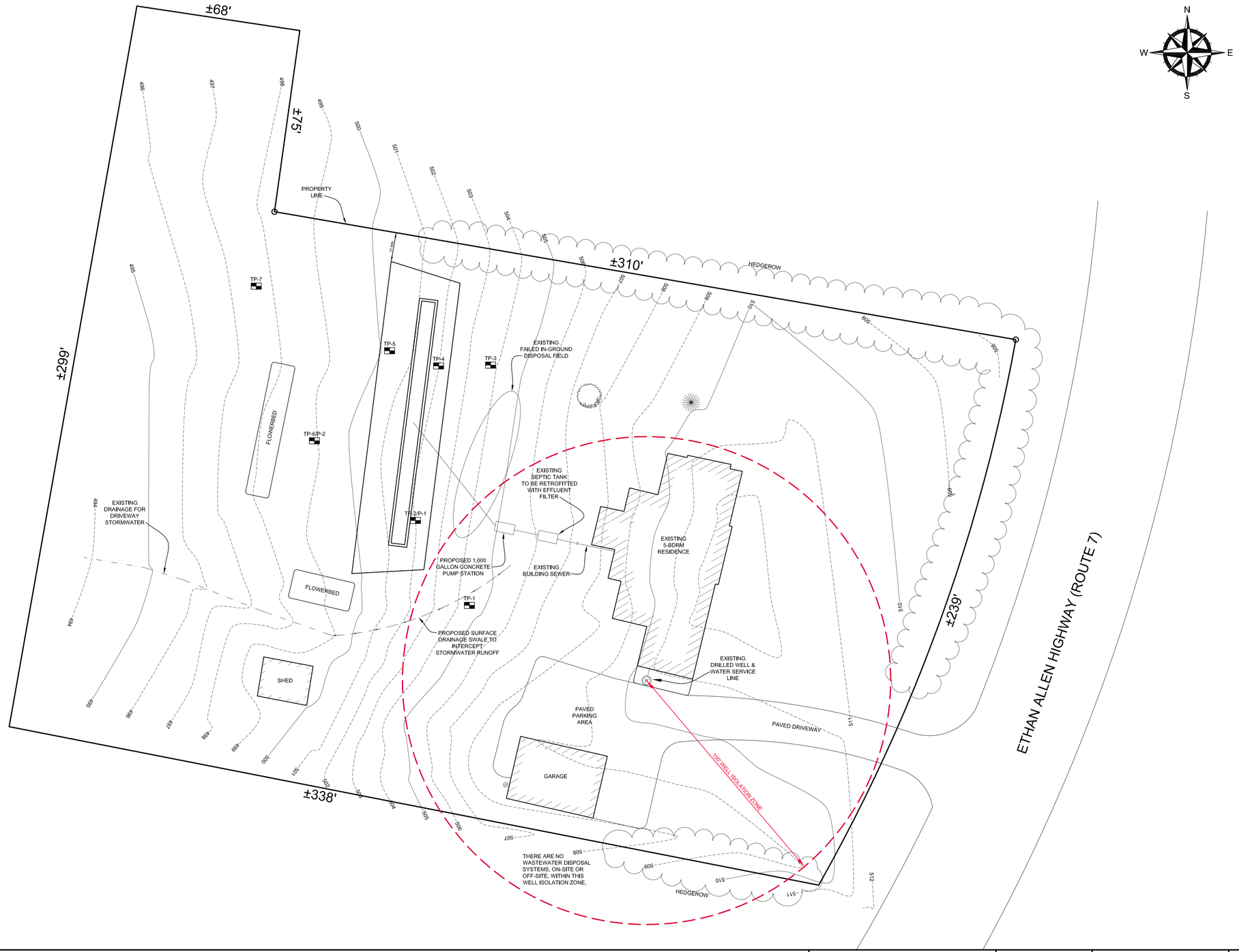

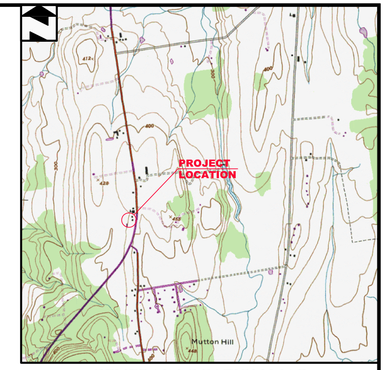

GENERAL LOCATION MAP

SCALE: 1"=2,000'±

LEGEND

- EXISTING GROUND CONTOUR
- EXISTING SANITARY SEWER
- EDGE OF PAVEMENT
- EXISTING PROPERTY LINE
- EXISTING HEDGEROW/TREELINE
- EXISTING SWALE/STREAM
- CONIFEROUS TREE
- DECIDUOUS TREE
- IRON PIPE FOUND
- WELL - DRILLED
- TEST PIT

GRAPHIC SCALE
(IN FEET)
20 0 10 20 40 80
(1"=20')

THE CONTRACTOR SHALL NOTIFY "DIGSAFE" AT 1-888-DIG-SAFE PRIOR TO ANY EXCAVATION.

"I hereby certify that in the exercise of my reasonable professional judgment the design-related information submitted with this application is true and correct, and that the design included in this application for a permit complies with the Vermont Wastewater System and Potable Water Supply Rules and the Vermont Water Supply Rules."

Elias J. Erwin — Date
Licensed Class B Designer #503

STATE OF VERMONT — ELIAS J. ERWIN NO. 503-B — LICENSED DESIGNER

LINCOLN APPLIED GEOLOGY, INC.
Environmental Consultants
163 Revell Drive, Lincoln, Vermont 05443
(802) 453-4384 (802) 453-5399 (fax)
Web : www.jagvt.com E-Mail: lagvt@lagvt.com

Barnes Property

1508 Ethan Allen Highway
Charlotte, Vermont

Site Plan with Proposed Replacement Wastewater Disposal System Layout

LAG PROJECT #	10021
DATE	April 2010
SURVEYORS	EE/TAM
DRAWN	TAM
PLAN SHEET #	1 of 2

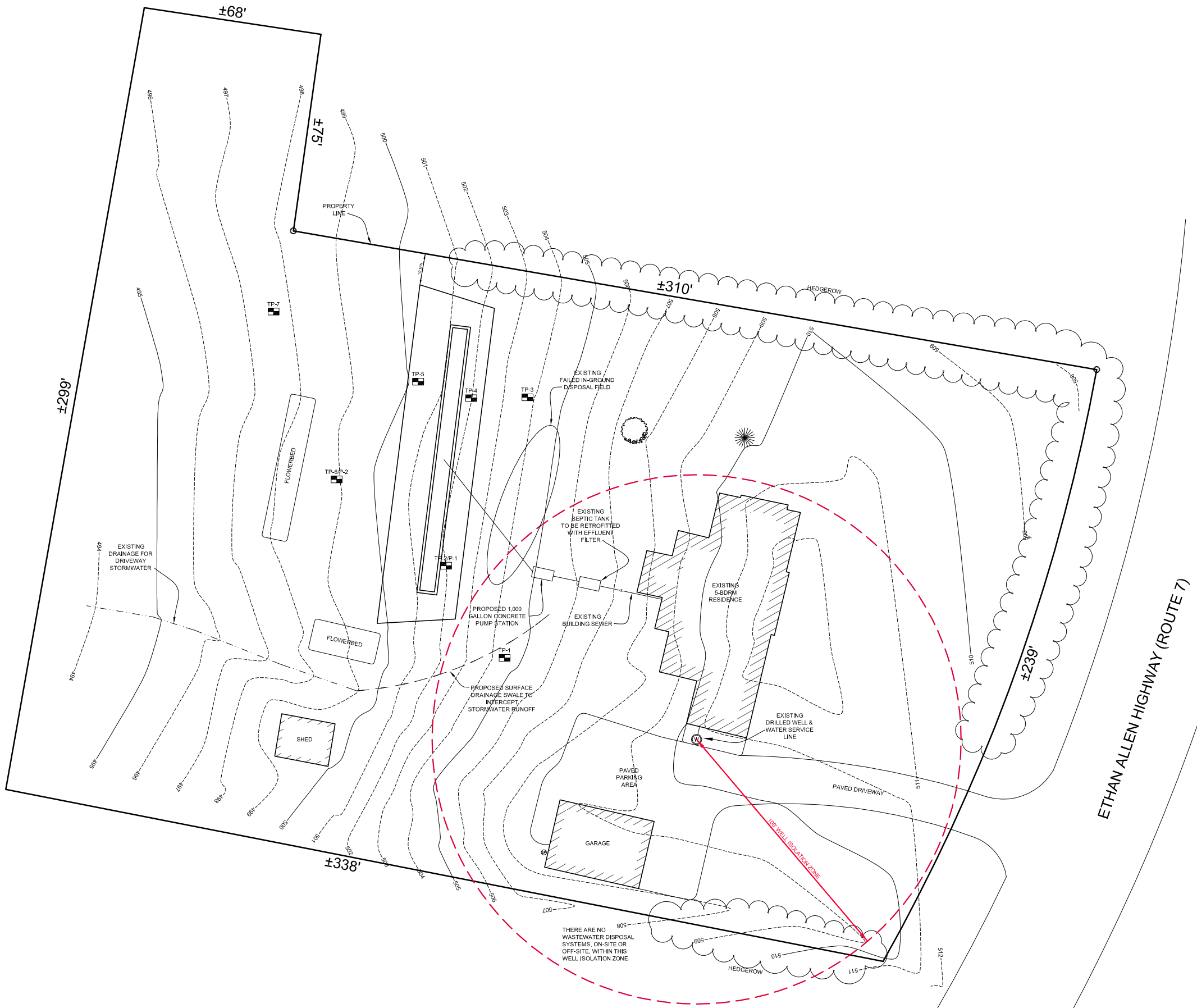

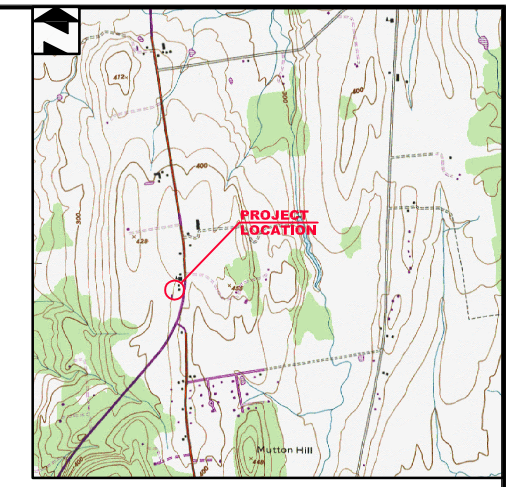

GENERAL LOCATION MAP

SCALE: 1"=2,000'±

LEGEND

498	EXISTING GROUND CONTOUR
S	EXISTING SANITARY SEWER
	EDGE OF PAVEMENT
	EXISTING PROPERTY LINE
	EXISTING HEDGEROW/TREELINE
	EXISTING SWALE/STREAM
	CONIFEROUS TREE
	DECIDUOUS TREE
	IRON PIPE FOUND
W	WELL - DRILLED
TP-1	TEST PIT

GRAPHIC SCALE
(IN FEET)
20 0 10 20 40 80
(1"=20')

THE CONTRACTOR SHALL NOTIFY "DIGSAFE" AT 1-888-DIG-SAFE PRIOR TO ANY EXCAVATION.

"I hereby certify that in the exercise of my reasonable professional judgment the design-related information submitted with this application is true and correct, and that the design included in this application for a permit complies with the Vermont Wastewater System and Potable Water Supply Rules and the Vermont Water Supply Rules."

Elias J. Erwin — Date
Licensed Class B Designer #503

STATE OF VERMONT
ELIAS J. ERWIN
NO. 503-B
LICENSED DESIGNER

LINCOLN APPLIED GEOLOGY, INC.
Environmental Consultants
163 Revell Drive, Lincoln, Vermont 05443
(802) 453-4384 (802) 453-3309 (fax)
Web: www.lagvt.com Email: lagvt@lagvt.com

Barnes Property
1508 Ethan Allen Highway
Charlotte, Vermont

Site Plan with Proposed Replacement Wastewater Disposal System Layout

LAG PROJECT #	10021
DATE	April 2010
SURVEYORS	EE/TAM
DRAWN	TAM
PLAN SHEET #	1 of 2

CONSTRUCTION SPECIFICATIONS - MOUND

1. MOUND CONSTRUCTION PROCEDURES ARE JUST AS IMPORTANT AS THE MOUND DESIGN. GOOD DESIGN WITH POOR CONSTRUCTION WILL RESULT IN THE MOUND OPERATING POORLY AND MAY RESULT IN FAILURE. PROPER EQUIPMENT IS ESSENTIAL. SMALL TRACK TYPE EXCAVATORS WORK BEST. WHEEL TYPE TRACTORS ARE TOO DIFFICULT TO MANEUVER IN THE FILL. THE FOLLOWING IS A STEP-BY-STEP PROCEDURE FOR MOUND CONSTRUCTION, WHICH HAS BEEN TRIED AND PROVEN. OTHER TECHNIQUES COULD BE USED AS LONG AS THE BASIC PRINCIPLES OF MOUND DESIGN, OPERATION, AND CONSTRUCTION ARE NOT VIOLATED.

2. SUBMIT A REPRESENTATIVE SAMPLE (ENOUGH TO FILL A 5 GALLON BUCKET) OF MOUND SAND FROM THE INTENDED SOURCE FOR TESTING ACCORDING TO ASTM D 422 (KNIGHT CONSULTING ENGINEERS, PHELPS ENGINEERING, OTTER CREEK ENGINEERING, AND VERMONT TESTING CAN ALL PERFORM THIS TEST). SUBMIT A COPY OF THE RESULTS TO THE DESIGNER PRIOR TO INITIATING CONSTRUCTION.

3. STAKE OUT THE MOUND ON THIS SITE SO THAT THE TRENCHES OR BED RUN PERPENDICULAR TO THE DIRECTION OF THE SLOPE. REFERENCE STAKES ARE RECOMMENDED IN CASE CORNER STAKES ARE DISTURBED. LINCOLN APPLIED GEOLOGY, INC., MUST STAKEOUT OR VERIFY THIS TASK.

4. STAKE OUT CORNERS OF THE BED AND DETERMINE THE BOTTOM ELEVATION OF THE BED.

5. DETERMINE WHERE THE FORCE MAIN FROM THE PUMP CHAMBER CONNECTS TO THE DISTRIBUTION SYSTEM IN THE MOUND.

6. TRENCH AND LAY THE FORCE MAIN FROM THE PUMP CHAMBER TO THE MOUND. LAY THE PIPE 5' BELOW THE GROUND SURFACE FOR FROST PROTECTION. WHERE THERE IS LESS THAN 5' OF COVER, INSULATE WITH 2" OF RIGID POLYSTYRENE INSULATION 4' WIDE 2' EITHER SIDE OF PIPE. PLACED IN TWO 1" LAYERS WITH STAGGERED JOINTS). CUT AND CAP THE PIPE 1' BENEATH THE GROUND SURFACE. BACKFILL AND COMPACT SOIL AROUND PIPE TO PREVENT BACK SEEPAGE OF EFFLUENT ALONG PIPE. THIS STEP MUST BE DONE BEFORE PLOWING TO AVOID COMPACTING AND DISTURBANCE OF SURFACE.

7. INSTALL THE CURTAIN DRAIN (IF SHOWN ON PLANS).

8. CHECK THE MOISTURE CONTENT OF THE SOIL AT 7 - 8" DEEP. IF IT IS TOO WET, SMEARING AND COMPACTION WILL RESULT, THUS REDUCING THE INFILTRATION CAPACITY OF THE SOIL. SOIL MOISTURE CAN BE DETERMINED BY ROLLING A SOIL SAMPLE BETWEEN THE HANDS. IF IT ROLLS INTO A RIBBON, THE SITE IS TOO WET TO PREPARE. IF IT CRUMBLES, SOIL PREPARATION CAN PROCEED.

9. CUT TREES TO GROUND LEVEL. REMOVE EXCESS VEGETATION BY MOWING. DO NOT REMOVE STUMPS. PREPARE THE SITE BY USING A MOLDBOARD PLOW TO CREATE 8 - 10" DEEP FURROWS PERPENDICULAR TO THE SLOPE. FURROWS MUST BE THROWN UP HILL. CHISEL PLOWING MAY BE USED IF A MOLDBOARD PLOW IS NOT AVAILABLE. ROTOTILLING MUST NOT BE DONE ON HEAVY SOILS BUT CAN BE USED ON NON-STRUCTURAL SOIL SUCH AS SANDS. ALTERNATIVELY, PLOWING CAN BE DONE BY USING AN EXCAVATOR BUCKET TO PULL THE SOIL INTO FURROWS PARALLEL WITH THE GROUND CONTOURS (THE RESULTING SURFACE MUST LOOK AS THOUGH IT HAD BEEN PLOWED WITH A MOLDBOARD PLOW, AS OUTLINED ABOVE). IMMEDIATE CONSTRUCTION AFTER PLOWING IS NECESSARY. AVOID RUTTING OF PLOWED AREA WITH VEHICULAR TRAFFIC. DESIGNER INSPECTION REQUIRED AT THIS POINT.

10. EXTEND THE EFFLUENT PIPE TO SEVERAL FEET ABOVE THE GROUND SURFACE.

11. PLACE THE APPROVED FILL MATERIAL AROUND THE EDGE OF THE PLOWED AREA. KEEP WHEELS OF TRUCK OFF PLOWED AREAS. MINIMIZE TRAFFIC ON THE DOWNSLOPE SIDE OF THE MOUND. WORK FROM THE END AND UPSLOPE SIDE.

12. MOVE THE FILL MATERIAL INTO PLACE USING A SMALL TRACK TYPE TRACTOR WITH A BLADE. ALWAYS KEEP A MINIMUM OF 6 INCHES OF SAND BENEATH TRACKS TO PREVENT COMPACTION OF THE NATURAL SOIL.

13. PLACE THE FILL MATERIAL TO THE REQUIRED DEPTH, WHICH IS THE TOP OF THE TRENCHES OR BED. SHAPE SIDES TO THE DESIRED SLOPE. INSPECTION REQUIRED AT THIS POINT.

14. WITH THE BLADE OF THE TRACTOR FORM THE BED OR TRENCHES. HAND LEVEL THE BOTTOM OF THE BED. MAKE SURE BOTTOM IS AT THE SAME ELEVATION AND LEVEL.

15. PLACE THE COARSE AGGREGATE IN THE TRENCHES OR BED. IT SHOULD BE ½ TO 1½", WASHED, DURABLE AGGREGATE (I.E. NOT LIMESTONE OR MARBLE). LEVEL AGGREGATE TO THE DESIGN DEPTH.

16. PLACE THE DISTRIBUTION SYSTEM ON THE AGGREGATE. CONNECT THE MANIFOLD TO THE FORCE MAIN FROM THE PUMP CHAMBER OR SIPHON CHAMBER. SLOPE MANIFOLD SLIGHTLY TOWARD DISTRIBUTION LATERALS. LAY LATERALS LEVEL, REMOVING RISES AND DIPS. PLACE ORIFICES UPWARDS. INSPECTION REQUIRED AT THIS POINT (TO OBSERVE DISCHARGE RATE AND PRESSURE TESTING).

17. PLACE SHIELDS ON ORIFICES AND PROPERLY CEMENT ALL COMPONENTS. PLACE 2" OF AGGREGATE OVER THE DISTRIBUTION PIPE.

18. PLACE A SYNTHETIC NON-WOVEN FILTER FABRIC (MIRAFI 140N OR EQUIVALENT) OVER THE ENTIRE STONE BED. OVERLAP JOINTS BY 12" MINIMUM. PLACE AN 8' X 8' MAT OF RIGID POLYSTYRENE INSULATION, 2" THICK, CENTERED OVER FORCE MAIN RISER. PLACE INSULATION IN TWO LAYERS (1" EACH) AND STAGGER THE JOINT PATTERN.

19. PLACE SOIL ON TOP OF THE BED OR TRENCH TO A DEPTH OF 1' IN CENTER AND 6" AT OUTER EDGE OF BED OR TRENCHES. THIS MAY BE A SUBSOIL OR TOPSOIL.

20. PLACE 6" OF GOOD QUALITY TOPSOIL OVER THE ENTIRE MOUND SURFACE. THIS WILL RAISE THE ELEVATION AT THE CENTER OF THE MOUND TO A MINIMUM OF 1.5' AND THE OUTSIDE EDGES OF BED OR TRENCHES 1'. INSPECTION REQUIRED AT THIS POINT.

21. LANDSCAPE THE MOUND BY PLANTING GRASS, USING THE BEST VEGETATION ADAPTABLE TO THE AREA. A MIXTURE OF 90% BIRDSFOOT TREEFOIL AND 10% TIMOTHY MAY BE DESIRABLE IF THE MOUND IS NOT MANICURED. IF MANICURING IS DESIRED, A COMBINATION OF 60% BLUEGRASS, 30% CREEPING RED FESCUE AND 10% ANNUAL RYE GRASS MAY BE THE DESIRED VEGETATIVE COVER. SHRUBS CAN BE PLANTED AROUND THE BASE AND UP THE SIDESLOPES. THEY SHOULD BE SOMEWHAT MOISTURE TOLERANT SINCE THE TOE OF THE MOUND MAY BE SOMEWHAT MOIST DURING VARIOUS TIMES OF THE YEAR. KEEP ALL TREES AND SHRUBS AWAY FROM THE TOP OF THE MOUND, AS ROOT SYSTEMS CAN DESTROY THE DISTRIBUTION NETWORK.

22. MOUND MAINTENANCE INVOLVES PUMPING THE SEPTIC TANK AND PUMP CHAMBER EVERY 1 TO 3 YEARS TO AVOID CARRYOVER OF SOLIDS INTO THE MOUND. A GOOD WATER CONSERVATION PLAN WITHIN THE HOUSE ASSURES THAT THE MOUND WILL NOT BE OVERLOADED. AVOID EXCESS TRAFFIC ON THE MOUND AREA. WINTER TRAFFIC ON MOUND SHOULD BE AVOIDED TO MINIMIZE FROST PENETRATION. INSPECT PUMP CHAMBER AND SEPTIC TANK EACH YEAR TO DETERMINE THE LEVEL OF SLUDGE ACCUMULATION. MOW TWICE A YEAR.

23. UTILITIES INFORMATION SHOWN ON THIS PLAN WAS OBTAINED FROM AVAILABLE SOURCES AND MAY OR MAY NOT BE EITHER ACCURATE OR COMPLETE. THE CONTRACTORS SHALL VERIFY EXACT LOCATION OF EXISTING UTILITIES AND SHALL BE RESPONSIBLE FOR ANY DAMAGE TO ANY UTILITY, PUBLIC OR PRIVATE, SHOWN OR NOT SHOWN ON THIS PLAN.

24. ALL FILL AROUND THE STRUCTURES SHALL BE PLACED IN 12" LIFTS AND THOROUGHLY COMPACTED TO 95% OF MAXIMUM DENSITY AT OPTIMUM MOISTURE CONTENT.

25. THIS DESIGN MUST BE INSPECTED BY LINCOLN APPLIED GEOLOGY, INC., LINCOLN, VERMONT, TO ENSURE COMPLIANCE WITH THESE PLANS. LINCOLN APPLIED GEOLOGY, INC., WAIVES ANY AND ALL RESPONSIBILITY AND LIABILITY FOR PROBLEMS THAT ARISE FROM FAILURE TO FOLLOW SPECIFICATIONS, AND THE DESIGN INTENT THAT THE PLANS CONVEY, AND FROM FAILURE TO HAVE BEEN NOTIFIED BY THE CONTRACTOR FOR INSPECTIONS.

SEPTIC TANK OPERATION & MAINTENANCE RECOMMENDATIONS

1. THE SEPTIC TANK'S PURPOSE IS TO SETTLE OUT SOLIDS, CONTAIN THE SCUM AND PASS TREATED EFFLUENT. BACTERIA WITHIN THE SEPTIC TANK HELPS DECOMPOSE THE SOLIDS. SHOULD ANY SOLIDS PASS THROUGH THE SEPTIC TANK INTO THE SYSTEM, PREMATURE CLOGGING OF THE PIPING, STONE OR NATIVE SOIL BENEATH THE SYSTEM IS LIKELY TO OCCUR. ONLY HUMAN WASTES SHOULD ENTER THE SEWAGE SYSTEM, WATER USE SHOULD BE CONSERVATIVE AND CLEANING AGENTS CANNOT ENTER THE SYSTEM, AS THEY KILL BACTERIA.

2. THE STATE FLOW FIGURES OF 140 GAL/DAY/BEDROOM ARE BASED ON SHORT TERM PEAK USE PERIODS (I.E., DAILY EVENTS). ACTUAL FLOWS SHOULD AVERAGE 75-100 GALLONS PER DAY, PER BEDROOMS.

3. ONCE PER YEAR, THE DEPTH OF SCUM AND SLUDGE IN THE SEPTIC TANK SHOULD BE MEASURED AND THE TANK SHALL BE PUMPED IF:

A. THE SLUDGE LEVEL IS WITHIN 12 INCHES OF THE BOTTOM OF THE OUTLET.

B. THE SCUM LAYER IS WITHIN 3 INCHES OF THE TOP OF THE OUTLET.

C. IF A OR B IS ANTICIPATED TO OCCUR PRIOR TO THE NEXT INSPECTION.

D. IN ANY CASE, THE TANK SHALL BE PUMPED AT A MAXIMUM 5 YEAR INTERVAL.

4. ONCE A YEAR, THE DISTRIBUTION BOX AND/OR PUMP STATION SHOULD BE INSPECTED AND ANY SETTLED SOLIDS REMOVED.

5. THE EFFLUENT FILTER SHOULD BE INSPECTED AND CLEANED ANNUALLY.

6. ABOVE ITEMS 1-5 ARE INTENDED TO PROLONG THE LIFE OF THE SYSTEM, NOT GUARANTEE IT.

SEWAGE DESIGN INFORMATION

1. THE SEWAGE DISPOSAL SYSTEM SHALL BE CONSTRUCTED IN ACCORDANCE WITH APPLICABLE TOWN REGULATIONS AND THE VERMONT ENVIRONMENTAL PROTECTION RULES.

2. THE FOLLOWING MINIMUM ISOLATION DISTANCES SHALL BE MAINTAINED FROM THE DISPOSAL AREA TO:

PROPERTY LINE	25 FEET
BUILDING (WITH FOOTING DRAIN) UPSLOPE OR SIDESLOPE	35 FEET
BUILDING (WITH FOOTING DRAIN) DOWNSLOPE	75 FEET
DRIVEWAYS & PARKING LOTS	10 FEET
TREES	10 FEET

3. BASIS OF DESIGN:

NO. OF BEDROOMS	5
DESIGN FLOW	560
PERCOLATION RATE	< 60 MIN/INCH
LOADING RATE, Q (TRENCHES)	1.0 GAL/SF/DAY (6" STONE)

4. SEPTIC TANK

A. A 1,000 GALLON PRECAST CONCRETE SEPTIC TANK, CAMP PRECAST OR APPROVED EQUAL SHALL BE USED, WITH THREE ACCESS COVERS: 4,000 PSI CONCRETE; WATERPROOF JOINTS AND SET ON THOROUGHLY COMPACTED SUBBASE. THE OUTLET BAFFLE SHALL HAVE AN EFFLUENT FILTER & A TWO (2) FOOT DIAMETER RISER TO GRADE WITH STEEL COVER.

B. THE USE OF GARBAGE DISPOSALS IS NOT RECOMMENDED.

5. MISC.:

A. IF A WATER TREATMENT SYSTEM IS GOING TO BE USED, THE BACKWASH WATER MAY NOT BE DISCHARGED INTO THE DISPOSAL SYSTEM.

STATE OF VERMONT MOUND SAND SPECIFICATIONS

Fill Material: The fill material from the natural soil plowed surface to the top of the trench or bed shall be sand texture with one of the following sieve analyses;

1.

Sieve Number	Opening (mm)	Percent Passing, by Weight
3/8	9.500	85 - 100
40	0.420	25 - 75
60	0.240	0 - 30
100	0.149	0 - 10
200	0.074	0 - 5

2.

Sieve Number	Opening (mm)	Percent Passing, by Weight
4	4.750	95 - 100
8	2.380	80 - 100
16	1.190	50 - 85
30	0.590	25 - 60
50	0.297	10 - 30
100	0.149	2 - 10

3.

Sieve Number	Opening (mm)	Percent Passing, by Weight
3/8	9.500	85 - 100
40	0.420	30 - 50
200	0.074	0 - 10

The material must meet specifications 1, 2, or 3. Interpolation of analyses is not permitted. Fill material 2 is ASTM Specification C-33 and is intended for manufactured material.

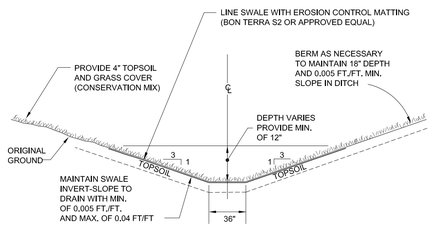

DRAINAGE SWALE DETAIL

NOT TO SCALE

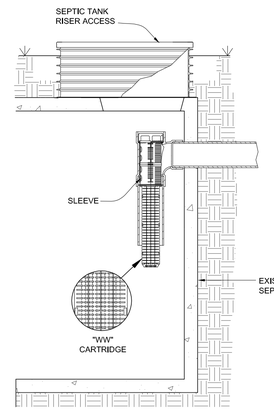

RETRO-FIT FILTER DETAIL

NOT TO SCALE

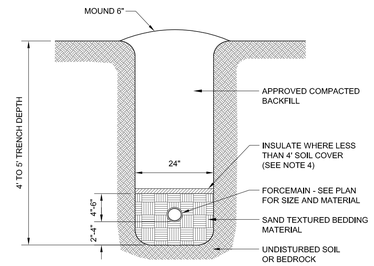

FORCEMAIN TRENCH NOTES:

1. BACKFILL AND BEDDING SHALL BE PROPERLY COMPACTED.
2. BEDDING MATERIAL SHALL NORMALLY CONSIST OF WELL-GRADED SANDS AND GRAVELS WITH A MAXIMUM SIZE OF 3/4".
3. BACKFILL SHALL NOT CONTAIN:
   -ANY STONES MORE THAN 12" (1 1/2" MAXIMUM DIAMETER WITHIN 2' OF THE OUTSIDE OF THE PIPE) IN THE LARGEST DIMENSION.
   -BE GREATER THAN 50 POUNDS.
   -CONTAIN ANY FROZEN, WET OR ORGANIC MATERIAL.
4. USE RIGID INSULATION AT THE RATE OF 1" FOR EVERY FOOT LESS THAN 4'.
5. FORCEMAIN MUST BE TESTED FOR LEAKAGE.
6. AT ANY CROSSING UNDER A ROAD OR DRIVE, FORCEMAIN IS TO BE ENCASED IN A 4" PVC SLEEVE. SAID SLEEVE IS TO EXTEND 8' IN EITHER DIRECTION FROM EDGE OF TRAVELED WAY.
7. THE SIDES OF THE TRENCHES 4' OR MORE IN DEPTH ENTERED BY PERSONNEL SHALL BE SHEETED OR SLOPED TO THE ANGLE OF REPOSE AS DEFINED BY O.S.H.A. STANDARDS.

FORCEMAIN TRENCH DETAIL

NOT TO SCALE

ITEM	LEACHFIELD	SEPTIC TANK	SEWER
DRILLED WELL	(b)	50	50
GRAVEL PACK WELL, SHALLOW WELL OR SPRING	(b)	75	75
LAKES, PONDS AND IMPOUNDMENTS	50	25	25
RIVER, STREAM	50	25	10
DRAINAGE SWALES, ROADWAY DITCHES	25	--	--
MAIN OR MUNICIPAL WATER LINES	50	50	(d)
SEWER SERVICE LINES	25	25	(d)
ROADWAYS, DRIVEWAYS, PARKING LOTS	10	5	(c)
TOP OF EMBANKMENT, OR SLOPE > 30%	25	10	--
PROPERTY LINE	25[1]	10	10
TREES	10	10	10
OTHER DISPOSAL FIELD OR REPLACEMENT AREA	10[2]	--	--
FOUNDATION, FOOTING DRAINS, CURTAIN DRAINS	35[3]	10	--
PUBLIC COMMUNITY WATER SUPPLY (e)	(f)	(f)	(f)
SUCTION WATER LINE	100	50	50

THESE DISTANCES MAY BE REDUCED WHEN EVIDENT THAT THE DISTANCE IN UNNECESSARY TO PROTECT AN ITEM OR INCREASED IF NECESSARY TO PROVIDE ADEQUATE PROTECTION.

(a) ISOLATION DISTANCES APPLY REGARDLESS OF PROPERTY LINE AND OWNERSHIP.
(b) SEPARATION BETWEEN POTABLE WATER SUPPLIES AND LEACHFIELD'S SHALL BE DETERMINED BY METHODS IN THE VERMONT WATER AND SUPPLY RULE, APPENDIX 21-A, PART 11, 11.4.
(c) SEWERS UNDER ROADS, DRIVEWAYS OR PARKING LOTS MAY REQUIRE PROTECTIVE CONDUITS OR SLEEVES.
(d) SEPARATION OF PRESSURE WATER LINES CONSIDERED AS "SERVICE CONNECTIONS" AND SEWER LINES SHALL ADHERE TO THE VERMONT PLUMBING RULES. SEPARATION OF PRESSURE WATER LINES (CONSIDERED TO BE PART OF A PUBLIC WATER SYSTEM AS DEFINED BY THE VERMONT WATER SUPPLY RULE) AND SEWER LINES SHALL ADHERE TO THE REQUIREMENTS OF THE VERMONT WATER SUPPLY RULE.
(e) THIS REFERS TO PUBLIC COMMUNITY WATER SYSTEMS, AS DEFINED IN THE VERMONT WATER SUPPLY RULE.
(f) CONTACT DEPARTMENT OF ENVIRONMENTAL CONSERVATION'S WATER SUPPLY DIVISION, 103 SOUTH MAIN STREET, WATERBURY, VERMONT FOR ISOLATION DISTANCES RELATIVE TO PUBLIC COMMUNITY WATER SUPPLY.

WASTEWATER SYSTEM ISOLATION DISTANCES

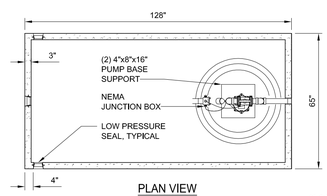

PLAN VIEW

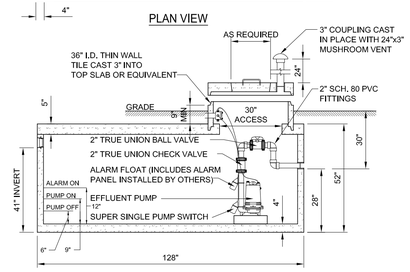

CROSS SECTION

DESIGN NOTES:

1. 4000 PSI CONCRETE, 28 DAY STRENGTH.
2. LOW PRESSURE SEALS DESIGNED TO ACCEPT 4" C.I. OR PVC PIPE.
3. REQUIRES EFFLUENT PUMP CAPABLE OF PUMPING A MINIMUM OF 21.31 GPM VERSUS 11.553' TDH, AND A SUPER SINGLE PUMP SWITCH WITH A 3" SWING SETTING (+/- 70 GALLONS) SET 6" ABOVE THE BASE OF THE PUMP WITH HIGH LEVEL ALARM SET 6" ABOVE THE PUMP ON SETTING.
4. IT SHOULD BE NOTED THAT ANY DEVIATION IN THE LOCATION OR ELEVATION OF THE SEPTIC TANK, PUMP STATION, OR THE DISPOSAL SYSTEM FROM THE DESIGNED LOCATION MAY REQUIRE A DIFFERENT SIZE PUMP.

1,000 GALLON PRECAST CONCRETE PUMP STATION

NOT TO SCALE

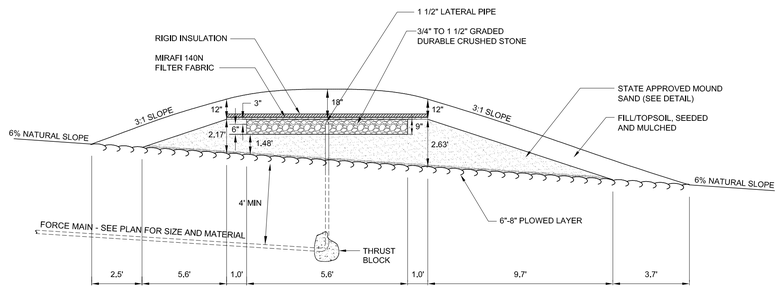

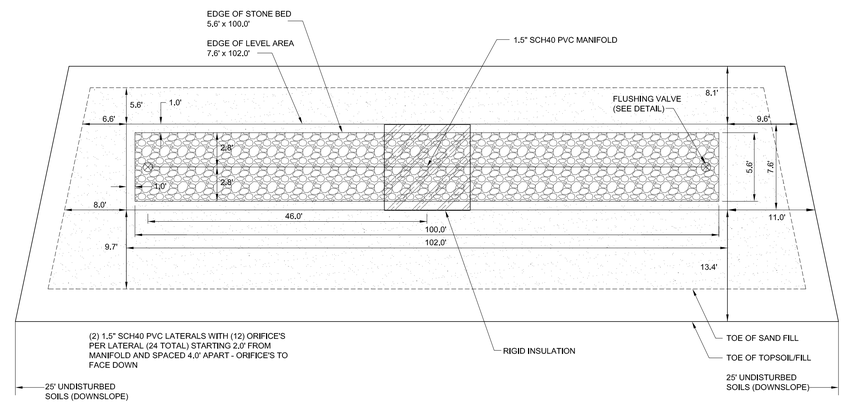

NOT TO SCALE

THE CONTRACTOR SHALL NOTIFY "DIGSAFE" AT 1-888-DIG-SAFE PRIOR TO ANY EXCAVATION.

"I hereby certify that in the exercise of my reasonable professional judgment the design-related information submitted with this application is true and correct, and that the design included in this application for a permit complies with the Vermont Wastewater System and Potable Water Supply Rules and the Vermont Water Supply Rules."

Elias J. Erwin — Date
Licensed Class B Designer #503

STATE OF VERMONT — ELIAS J. ERWIN NO. 503-B — LICENSED DESIGNER

LINCOLN APPLIED GEOLOGY, INC. — Environmental Consultants
163 Revell Drive, Lincoln, Vermont 05443
(802) 453-4384 (802) 453-5399 (fax)
Web: www.lagvt.com E-Mail: lag@lagvt.com

Barnes Property
1508 Ethan Allen Highway
Charlotte, Vermont

Proposed Wastewater System Design Details

LAG PROJECT #	10021
DATE	April 2010
SURVEYORS	EE/TAM
DRAWN	TAM
PLAN SHEET #	2 of 2

CONSTRUCTION SPECIFICATIONS - MOUND

1. MOUND CONSTRUCTION PROCEDURES ARE JUST AS IMPORTANT AS THE MOUND DESIGN. GOOD DESIGN WITH POOR CONSTRUCTION WILL RESULT IN THE MOUND OPERATING POORLY AND MAY RESULT IN FAILURE. PROPER EQUIPMENT IS ESSENTIAL. SMALL TRACK TYPE EXCAVATORS WORK BEST. WHEEL TYPE TRACTORS ARE TOO DIFFICULT TO MANEUVER IN THE FILL. THE FOLLOWING IS A STEP-BY-STEP PROCEDURE FOR MOUND CONSTRUCTION, WHICH HAS BEEN TRIED AND PROVEN. OTHER TECHNIQUES COULD BE USED AS LONG AS THE BASIC PRINCIPLES OF MOUND DESIGN, OPERATION, AND CONSTRUCTION ARE NOT VIOLATED.

2. SUBMIT A REPRESENTATIVE SAMPLE (ENOUGH TO FILL A 5 GALLON BUCKET) OF MOUND SAND FROM THE INTENDED SOURCE FOR TESTING ACCORDING TO ASTM D 422 (KNIGHT CONSULTING ENGINEERS, PHELPS ENGINEERING, OTTER CREEK ENGINEERING, AND VERMONT TESTING CAN ALL PERFORM THIS TEST). SUBMIT A COPY OF THE RESULTS TO THE DESIGNER PRIOR TO INITIATING CONSTRUCTION.

3. STAKE OUT THE MOUND ON THIS SITE SO THAT THE TRENCHES OR BED RUN PERPENDICULAR TO THE DIRECTION OF THE SLOPE. REFERENCE STAKES ARE RECOMMENDED IN CASE CORNER STAKES ARE DISTURBED. LINCOLN APPLIED GEOLOGY, INC., MUST STAKEOUT OR VERIFY THIS TASK.

4. STAKE OUT CORNERS OF THE BED AND DETERMINE THE BOTTOM ELEVATION OF THE BED.

5. DETERMINE WHERE THE FORCE MAIN FROM THE PUMP CHAMBER CONNECTS TO THE DISTRIBUTION SYSTEM IN THE MOUND.

6. TRENCH AND LAY THE FORCE MAIN FROM THE PUMP CHAMBER TO THE MOUND. LAY THE PIPE 5' BELOW THE GROUND SURFACE FOR FROST PROTECTION. WHERE THERE IS LESS THAN 5' OF COVER, INSULATE WITH 2" OF RIGID POLYSTYRENE INSULATION 4' WIDE (2' EITHER SIDE OF PIPE, PLACED IN TWO 1" LAYERS WITH STAGGERED JOINTS). CUT AND CAP THE PIPE 1' BENEATH THE GROUND SURFACE. BACKFILL AND COMPACT SOIL AROUND PIPE TO PREVENT BACK SEEPAGE OF EFFLUENT ALONG PIPE. THIS STEP MUST BE DONE BEFORE PLOWING TO AVOID COMPACTING AND DISTURBANCE OF SURFACE.

7. INSTALL THE CURTAIN DRAIN (IF SHOWN ON PLANS).

8. CHECK THE MOISTURE CONTENT OF THE SOIL AT 7 - 8" DEEP. IF IT IS TOO WET, SMEARING AND COMPACTION WILL RESULT, THUS REDUCING THE INFILTRATION CAPACITY OF THE SOIL. SOIL MOISTURE CAN BE DETERMINED BY ROLLING A SOIL SAMPLE BETWEEN THE HANDS. IF IT ROLLS INTO A RIBBON, THE SITE IS TOO WET TO PREPARE. IF IT CRUMBLES, SOIL PREPARATION CAN PROCEED.

9. CUT TREES TO GROUND LEVEL. REMOVE EXCESS VEGETATION BY MOWING. DO NOT REMOVE STUMPS. PREPARE THE SITE BY USING A MOLDBOARD PLOW TO CREATE 8 - 10" DEEP FURROWS PERPENDICULAR TO THE SLOPE. FURROWS MUST BE THROWN UP HILL. CHISEL PLOWING MAY BE USED IF A MOLDBOARD PLOW IS NOT AVAILABLE. ROTOTILLING MUST NOT BE DONE ON HEAVY SOILS BUT CAN BE USED ON NON-STRUCTURAL SOIL SUCH AS SANDS. ALTERNATIVELY, PLOWING CAN BE DONE BY USING AN EXCAVATOR BUCKET TO PULL THE SOIL INTO FURROWS PARALLEL WITH THE GROUND CONTOURS (THE RESULTING SURFACE MUST LOOK AS THOUGH IT HAD BEEN PLOWED WITH A MOLDBOARD PLOW, AS OUTLINED ABOVE). IMMEDIATE CONSTRUCTION AFTER PLOWING IS NECESSARY. AVOID RUTTING OF PLOWED AREA WITH VEHICULAR TRAFFIC. DESIGNER INSPECTION REQUIRED AT THIS POINT.

10. EXTEND THE EFFLUENT PIPE TO SEVERAL FEET ABOVE THE GROUND SURFACE.

11. PLACE THE APPROVED FILL MATERIAL AROUND THE EDGE OF THE PLOWED AREA. KEEP WHEELS OF TRUCK OFF PLOWED AREAS. MINIMIZE TRAFFIC ON THE DOWNSLOPE SIDE OF THE MOUND. WORK FROM THE END AND UPSLOPE SIDE.

12. MOVE THE FILL MATERIAL INTO PLACE USING A SMALL TRACK TYPE TRACTOR WITH A BLADE. ALWAYS KEEP A MINIMUM OF 6 INCHES OF SAND BENEATH TRACKS TO PREVENT COMPACTION OF THE NATURAL SOIL.

13. PLACE THE FILL MATERIAL TO THE REQUIRED DEPTH, WHICH IS THE TOP OF THE TRENCHES OR BED. SHAPE SIDES TO THE DESIRED SLOPE. INSPECTION REQUIRED AT THIS POINT.

14. WITH THE BLADE OF THE TRACTOR FORM THE BED OR TRENCHES. HAND LEVEL THE BOTTOM OF THE BED. MAKE SURE BOTTOM IS AT THE SAME ELEVATION AND LEVEL.

15. PLACE THE COARSE AGGREGATE IN THE TRENCHES OR BED. IT SHOULD BE ¾ TO 1½", WASHED, DURABLE AGGREGATE (I.E. NOT LIMESTONE OR MARBLE). LEVEL AGGREGATE TO THE DESIGN DEPTH.

16. PLACE THE DISTRIBUTION SYSTEM ON THE AGGREGATE. CONNECT THE MANIFOLD TO THE FORCE MAIN FROM THE PUMP CHAMBER OR SIPHON CHAMBER. SLOPE MANIFOLD SLIGHTLY TOWARD DISTRIBUTION LATERALS. LAY LATERALS LEVEL, REMOVING RISES AND DIPS. PLACE ORIFICES UPWARDS. INSPECTION REQUIRED AT THIS POINT (TO OBSERVE DISCHARGE RATE AND PRESSURE TESTING).

17. PLACE SHIELDS ON ORIFICES AND PROPERLY CEMENT ALL COMPONENTS. PLACE 2" OF AGGREGATE OVER THE DISTRIBUTION PIPE.

18. PLACE A SYNTHETIC NON-WOVEN FILTER FABRIC (MIRAFI 140N OR EQUIVALENT) OVER THE ENTIRE STONE BED. OVERLAP JOINTS BY 12" MINIMUM. PLACE AN 8' X 8' MAT OF RIGID POLYSTYRENE INSULATION, 2" THICK, CENTERED OVER FORCE MAIN RISER. PLACE INSULATION IN TWO LAYERS (1" EACH) AND STAGGER THE JOINT PATTERN.

19. PLACE SOIL ON TOP OF THE BED OR TRENCH TO A DEPTH OF 1" IN CENTER AND 6" AT OUTER EDGE OF BED OR TRENCHES. THIS MAY BE A SUBSOIL OR TOPSOIL.

20. PLACE 6" OF GOOD QUALITY TOPSOIL OVER THE ENTIRE MOUND SURFACE. THIS WILL RAISE THE ELEVATION AT THE CENTER OF THE MOUND TO A MINIMUM OF 1.5' AND THE OUTSIDE EDGES OF BED OR TRENCHES 1'. INSPECTION REQUIRED AT THIS POINT.

21. LANDSCAPE THE MOUND BY PLANTING GRASS, USING THE BEST VEGETATION ADAPTABLE TO THE AREA. A MIXTURE OF 90% BIRDSFOOT TREEFOIL AND 10% TIMOTHY MAY BE DESIRABLE IF THE MOUND IS NOT MANICURED. IF MANICURING IS DESIRED, A COMBINATION OF 60% BLUEGRASS, 30% CREEPING RED FESCUE AND 10% ANNUAL RYE GRASS MAY BE THE DESIRED VEGETATIVE COVER. SHRUBS CAN BE PLANTED AROUND THE BASE AND UP THE SIDESLOPES, THEY SHOULD BE SOMEWHAT MOISTURE TOLERANT SINCE THE TOE OF THE MOUND MAY BE SOMEWHAT MOIST DURING VARIOUS TIMES OF THE YEAR. KEEP ALL TREES AND SHRUBS AWAY FROM THE TOP OF THE MOUND, AS ROOT SYSTEMS CAN DESTROY THE DISTRIBUTION NETWORK.

22. MOUND MAINTENANCE INVOLVES PUMPING THE SEPTIC TANK AND PUMP CHAMBER EVERY 1 TO 3 YEARS TO AVOID CARRYOVER OF SOLIDS INTO THE MOUND. A GOOD WATER CONSERVATION PLAN WITHIN THE HOUSE ASSURES THAT THE MOUND WILL NOT BE OVERLOADED. AVOID EXCESS TRAFFIC ON THE MOUND AREA. WINTER TRAFFIC ON MOUND SHOULD BE AVOIDED TO MINIMIZE FROST PENETRATION. INSPECT PUMP CHAMBER AND SEPTIC TANK EACH YEAR TO DETERMINE THE LEVEL OF SLUDGE ACCUMULATION. MOW TWICE A YEAR.

23. UTILITIES INFORMATION SHOWN ON THIS PLAN WAS OBTAINED FROM AVAILABLE SOURCES AND MAY OR MAY NOT BE EITHER ACCURATE OR COMPLETE. THE CONTRACTORS SHALL VERIFY EXACT LOCATION OF EXISTING UTILITIES AND SHALL BE RESPONSIBLE FOR ANY DAMAGE TO ANY UTILITY, PUBLIC OR PRIVATE, SHOWN OR NOT SHOWN ON THIS PLAN.

24. ALL FILL AROUND THE STRUCTURES SHALL BE PLACED IN 12" LIFTS AND THOROUGHLY COMPACTED TO 95% OF MAXIMUM DENSITY AT OPTIMUM MOISTURE CONTENT.

25. THIS DESIGN MUST BE INSPECTED BY LINCOLN APPLIED GEOLOGY, INC., LINCOLN, VERMONT, TO ENSURE COMPLIANCE WITH THESE PLANS. LINCOLN APPLIED GEOLOGY, INC., WAIVES ANY AND ALL RESPONSIBILITY AND LIABILITY FOR PROBLEMS THAT ARISE FROM FAILURE TO FOLLOW SPECIFICATIONS, AND THE DESIGN INTENT THAT THE PLANS CONVEY, AND FROM FAILURE TO HAVE BEEN NOTIFIED BY THE CONTRACTOR FOR INSPECTIONS.

SEPTIC TANK OPERATION & MAINTENANCE RECOMMENDATIONS

1. THE SEPTIC TANK'S PURPOSE IS TO SETTLE OUT SOLIDS, CONTAIN THE SCUM AND PASS TREATED EFFLUENT. BACTERIA WITHIN THE SEPTIC TANK HELPS DECOMPOSE THE SOLIDS. SHOULD ANY SOLIDS PASS THROUGH THE SEPTIC TANK INTO THE SYSTEM, PREMATURE CLOGGING OF THE PIPING, STONE OR NATIVE SOIL BENEATH THE SYSTEM IS LIKELY TO OCCUR. ONLY HUMAN WASTES SHOULD ENTER THE SEWAGE SYSTEM, WATER USE SHOULD BE CONSERVATIVE AND CLEANING AGENTS CANNOT ENTER THE SYSTEM, AS THEY KILL BACTERIA.

2. THE STATE FLOW FIGURES OF 140 GAL/DAY/BEDROOM ARE BASED ON SHORT TERM PEAK USE PERIODS (I.E., DAILY EVENTS). ACTUAL FLOWS SHOULD AVERAGE 75-100 GALLONS PER DAY, PER BEDROOMS.

3. ONCE PER YEAR, THE DEPTH OF SCUM AND SLUDGE IN THE SEPTIC TANK SHOULD BE MEASURED AND THE TANK SHALL BE PUMPED IF:

A. THE SLUDGE LEVEL IS WITHIN 12 INCHES OF THE BOTTOM OF THE OUTLET.

B. THE SCUM LAYER IS WITHIN 3 INCHES OF THE TOP OF THE OUTLET.

C. IF A OR B IS ANTICIPATED TO OCCUR PRIOR TO THE NEXT INSPECTION.

D. IN ANY CASE, THE TANK SHALL BE PUMPED AT A MAXIMUM 5 YEAR INTERVAL.

4. ONCE A YEAR, THE DISTRIBUTION BOX AND/OR PUMP STATION SHOULD BE INSPECTED AND ANY SETTLED SOLIDS REMOVED.

5. THE EFFLUENT FILTER SHOULD BE INSPECTED AND CLEANED ANNUALLY.

6. ABOVE ITEMS 1-5 ARE INTENDED TO PROLONG THE LIFE OF THE SYSTEM, NOT GUARANTEE IT.

SEWAGE DESIGN INFORMATION

1. THE SEWAGE DISPOSAL SYSTEM SHALL BE CONSTRUCTED IN ACCORDANCE WITH APPLICABLE TOWN REGULATIONS AND THE VERMONT ENVIRONMENTAL PROTECTION RULES.

2. THE FOLLOWING MINIMUM ISOLATION DISTANCES SHALL BE MAINTAINED FROM THE DISPOSAL AREA TO:

PROPERTY LINE	25 FEET
BUILDING (WITH FOOTING DRAIN) UPSLOPE OR SIDESLOPE	35 FEET
BUILDING (WITH FOOTING DRAIN) DOWNSLOPE	75 FEET
DRIVEWAYS & PARKING LOTS	10 FEET
TREES	10 FEET

3. BASIS OF DESIGN:

NO. OF BEDROOMS	5
DESIGN FLOW	560
PERCOLATION RATE	< 60 MIN/INCH
LOADING RATE, Q (TRENCHES)	1.0 GAL/SF/DAY (6" STONE)

4. SEPTIC TANK

A. A 1,000 GALLON PRECAST CONCRETE SEPTIC TANK, CAMP PRECAST OR APPROVED EQUAL SHALL BE USED, WITH THREE ACCESS COVERS; 4,000 PSI CONCRETE; WATERPROOF JOINTS AND SET ON THOROUGHLY COMPACTED SUBBASE. THE OUTLET BAFFLE SHALL HAVE AN EFFLUENT FILTER & A TWO (2) FOOT DIAMETER RISER TO GRADE WITH STEEL COVER.

B. THE USE OF GARBAGE DISPOSALS IS NOT RECOMMENDED.

5. MISC.:

A. IF A WATER TREATMENT SYSTEM IS GOING TO BE USED, THE BACKWASH WATER MAY NOT BE DISCHARGED INTO THE DISPOSAL SYSTEM.

STATE OF VERMONT MOUND SAND SPECIFICATIONS

Fill Material: The fill material from the natural soil plowed surface to the top of the trench or bed shall be sand texture with one of the following sieve analyses:

1.

Sieve Number	Opening (mm)	Percent Passing, by Weight
3/8	9.500	85 - 100
40	0.420	25 - 75
60	0.240	0 - 30
100	0.149	0 - 10
200	0.074	0 - 5

2.

Sieve Number	Opening (mm)	Percent Passing, by Weight
4	4.750	95 - 100
8	2.380	80 - 100
16	1.190	50 - 85
30	0.590	25 - 60
50	0.297	10 - 30
100	0.149	2 - 10

3.

Sieve Number	Opening (mm)	Percent Passing, by Weight
3/8	9.500	85 - 100
40	0.420	30 - 50
200	0.074	0 - 10

The material must meet specifications 1, 2, or 3. Interpolation of analyses is not permitted. Fill material 2 is ASTM Specification C-33 and is intended for manufactured material.

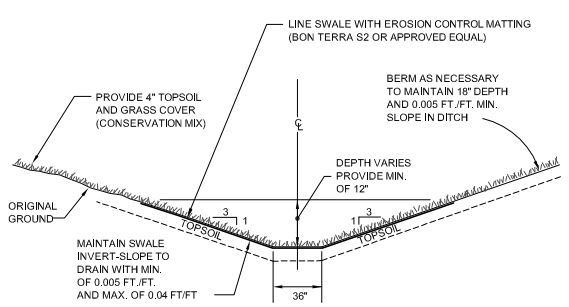

DRAINAGE SWALE DETAIL

NOT TO SCALE

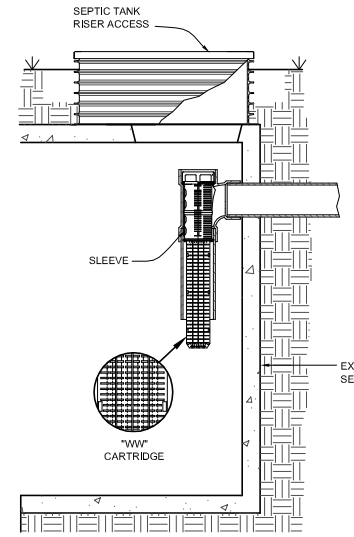

RETRO-FIT FILTER DETAIL

NOT TO SCALE

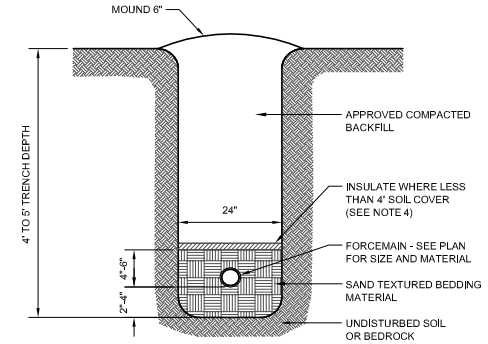

FORCEMAIN TRENCH NOTES:

1. BACKFILL AND BEDDING SHALL BE PROPERLY COMPACTED.
2. BEDDING MATERIAL SHALL NORMALLY CONSIST OF WELL-GRADED SANDS AND GRAVELS WITH A MAXIMUM SIZE OF 3/4".
3. BACKFILL SHALL NOT CONTAIN:
   - ANY STONES MORE THAN 12" (1 1/2" MAXIMUM DIAMETER WITHIN 2' OF THE OUTSIDE OF THE PIPE) IN THE LARGEST DIMENSION.
   - BE GREATER THAN 50 POUNDS.
   - CONTAIN ANY FROZEN, WET OR ORGANIC MATERIAL.
4. USE RIGID INSULATION AT THE RATE OF 1" FOR EVERY FOOT LESS THAN 4'.
5. FORCEMAIN MUST BE TESTED FOR LEAKAGE.
6. AT ANY CROSSING UNDER A ROAD OR DRIVE, FORCEMAIN IS TO BE ENCASED IN A 4" PVC SLEEVE, SAID SLEEVE IS TO EXTEND 8' IN EITHER DIRECTION FROM EDGE OF TRAVELED WAY.
7. THE SIDES OF THE TRENCHES 4' OR MORE IN DEPTH ENTERED BY PERSONNEL SHALL BE SHEETED OR SLOPED TO THE ANGLE OF REPOSE AS DEFINED BY O.S.H.A. STANDARDS.

FORCEMAIN TRENCH DETAIL

NOT TO SCALE

ITEM	LEACHFIELD	SEPTIC TANK	SEWER
DRILLED WELL	(b)	50	50
GRAVEL PACK WELL, SHALLOW WELL OR SPRING	(b)	75	75
LAKES, PONDS AND IMPOUNDMENT'S	50	25	25
RIVER, STREAM	50	25	10
DRAINAGE SWALES, ROADWAY DITCHES	25	--	--
MAIN OR MUNICIPAL WATER LINES	50	50	(d)
SEWER SERVICE LINES	25	25	(d)
ROADWAYS, DRIVEWAYS, PARKING LOTS	10	5	(c)
TOP OF EMBANKMENT, OR SLOPE > 30%	25	10	--
PROPERTY LINE	25[1]	10	10
TREES	10	10	10
OTHER DISPOSAL FIELD OR REPLACEMENT AREA	10[2]	--	--
FOUNDATION, FOOTING DRAINS, CURTAIN DRAINS	35[3]	10	--
PUBLIC COMMUNITY WATER SUPPLY (e)	(f)	(f)	(f)
SUCTION WATER LINE	100	50	50

THESE DISTANCES MAY BE REDUCED WHEN EVIDENT THAT THE DISTANCE IN UNNECESSARY TO PROTECT AN ITEM OR INCREASED IF NECESSARY TO PROVIDE ADEQUATE PROTECTION.

(a) ISOLATION DISTANCES APPLY REGARDLESS OF PROPERTY LINE AND OWNERSHIP.
(b) SEPARATION BETWEEN POTABLE WATER SUPPLIES AND LEACHFIELD'S SHALL BE DETERMINED BY METHODS IN THE VERMONT WATER AND SUPPLY RULE, APPENDIX 21-A, PART 11, 11.4.
(c) SEWERS UNDER ROADS, DRIVEWAYS OR PARKING LOTS MAY REQUIRE PROTECTIVE CONDUITS OR SLEEVES.
(d) SEPARATION OF PRESSURE WATER LINES CONSIDERED AS "SERVICE CONNECTIONS" AND SEWER LINES SHALL ADHERE TO THE VERMONT PLUMBING RULES. SEPARATION OF PRESSURE WATER LINES (CONSIDERED TO BE PART OF A PUBLIC WATER SYSTEM AS DEFINED BY THE VERMONT WATER SUPPLY RULE) AND SEWER LINES SHALL ADHERE TO THE REQUIREMENTS OF THE VERMONT WATER SUPPLY RULE.
(e) THIS REFERS TO PUBLIC COMMUNITY WATER SYSTEMS, AS DEFINED IN THE VERMONT WATER SUPPLY RULE.
(f) CONTACT DEPARTMENT OF ENVIRONMENTAL CONSERVATION'S WATER SUPPLY DIVISION, 103 SOUTH MAIN STREET, WATERBURY, VERMONT FOR ISOLATION DISTANCES RELATIVE TO PUBLIC COMMUNITY WATER SUPPLY.

WASTEWATER SYSTEM ISOLATION DISTANCES

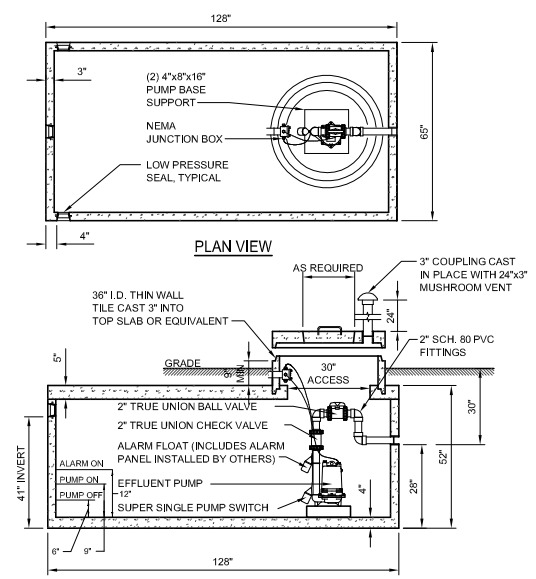

CROSS SECTION

DESIGN NOTES:

1. 4000 PSI CONCRETE, 28 DAY STRENGTH.
2. LOW PRESSURE SEALS DESIGNED TO ACCEPT 4" C.I. OR PVC PIPE.
3. REQUIRES EFFLUENT PUMP CAPABLE OF PUMPING A MINIMUM OF 21.31 GPM VERSUS 11.553' TDH, AND A SUPER SINGLE PUMP SWITCH WITH A 3" SWING SETTING (+/- 70 GALLONS) SET 6" ABOVE THE BASE OF THE PUMP WITH HIGH LEVEL ALARM SET 6" ABOVE THE PUMP ON SETTING.
4. IT SHOULD BE NOTED THAT ANY DEVIATION IN THE LOCATION OR ELEVATION OF THE SEPTIC TANK, PUMP STATION, OR THE DISPOSAL SYSTEM FROM THE DESIGNED LOCATION MAY REQUIRE A DIFFERENT SIZE PUMP.

1,000 GALLON PRECAST CONCRETE PUMP STATION

NOT TO SCALE

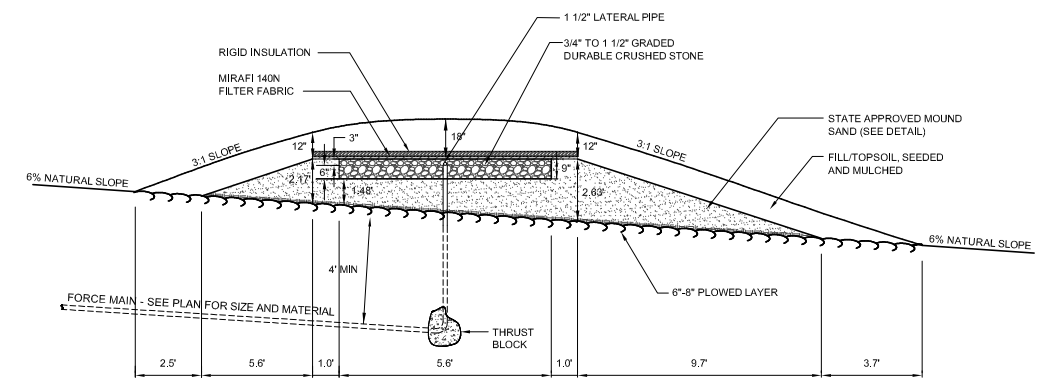

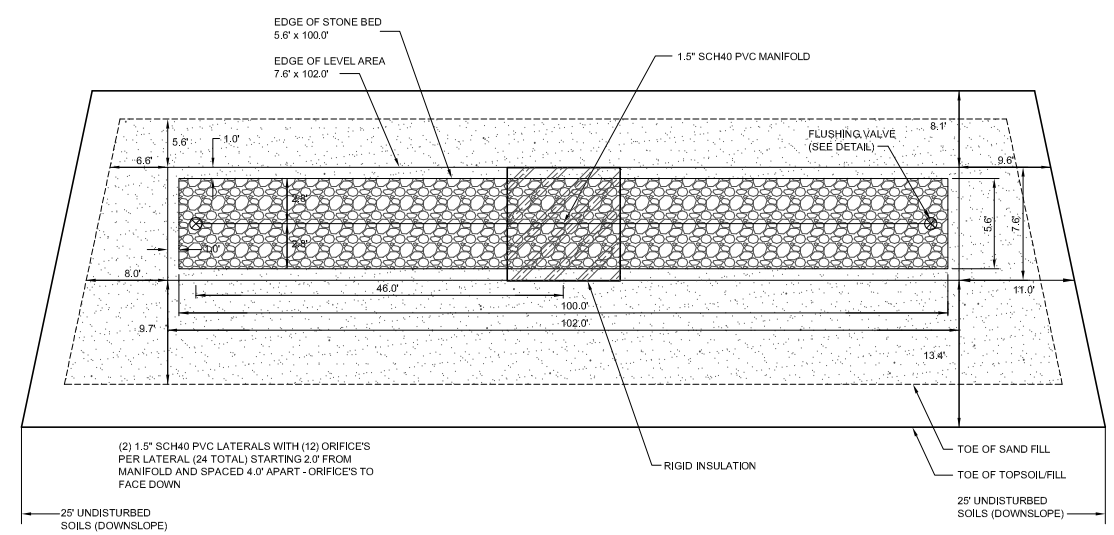

NOT TO SCALE

THE CONTRACTOR SHALL NOTIFY "DIGSAFE" AT 1-888-DIG-SAFE PRIOR TO ANY EXCAVATION.

"I hereby certify that in the exercise of my reasonable professional judgment the design-related information submitted with this application is true and correct, and that the design included in this application for a permit complies with the Vermont Wastewater System and Potable Water Supply Rules and the Vermont Water Supply Rules."

Elias J. Erwin — Date
Licensed Class B Designer #503

STATE OF VERMONT — ELIAS J. ERWIN NO. 503-B — LICENSED DESIGNER

LINCOLN APPLIED GEOLOGY, INC.
Environmental Consultants
103 Revell Drive, Lincoln, Vermont 05443
(802) 453-4384 (802) 453-3399 (fax)
Web : www.lagvt.com E-Mail: lagvt@lagvt.com

Barnes Property
1508 Ethan Allen Highway
Charlotte, Vermont

Proposed Wastewater System Design Details

LAG PROJECT #	10021
DATE	April 2010
SURVEYORS	EE/TAM
DRAWN	TAM
PLAN SHEET #	2 of 2