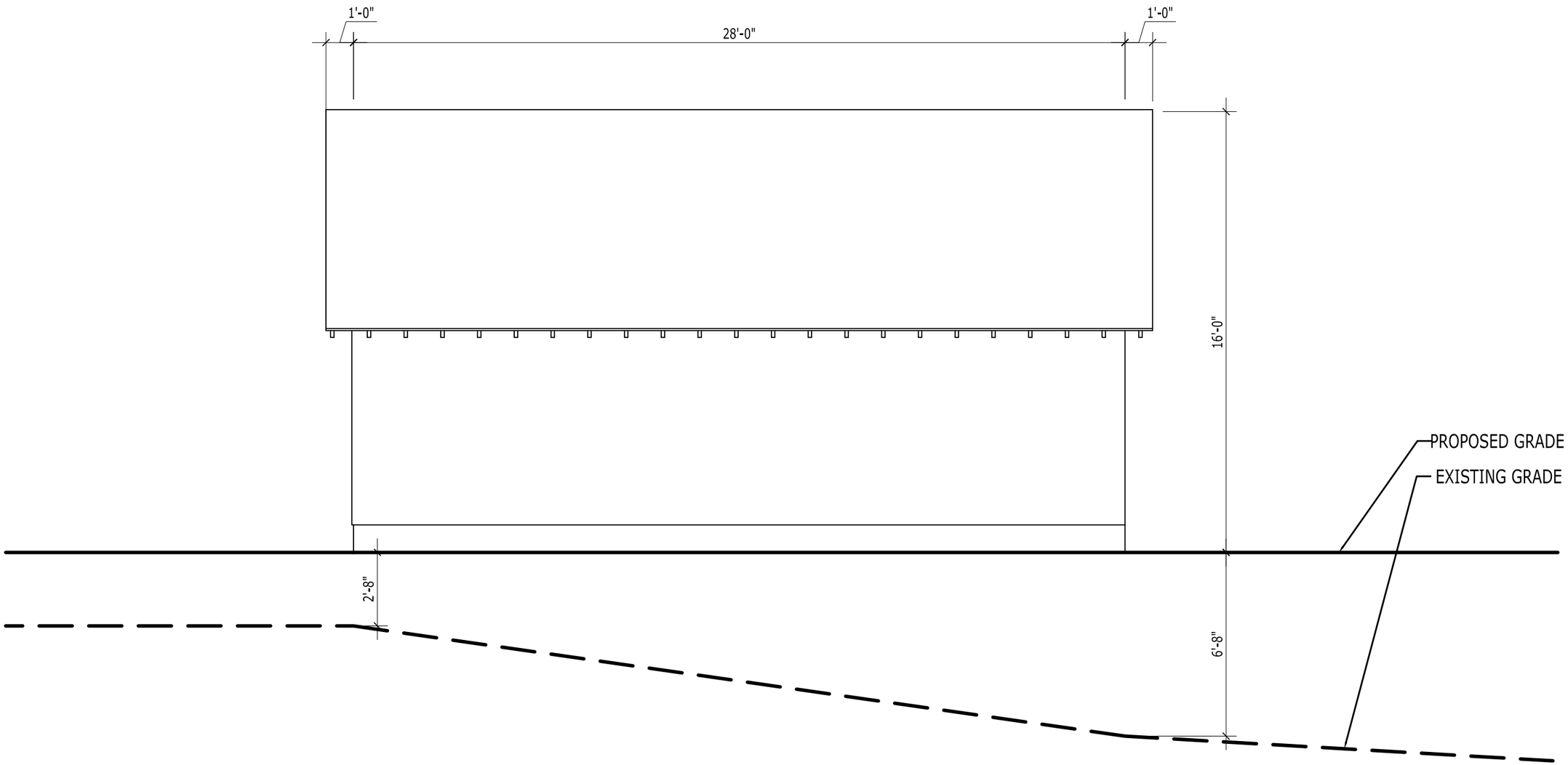

EXTERIOR ELEVATIONS

1/4"=1'-0"

BEAL RESIDENCE