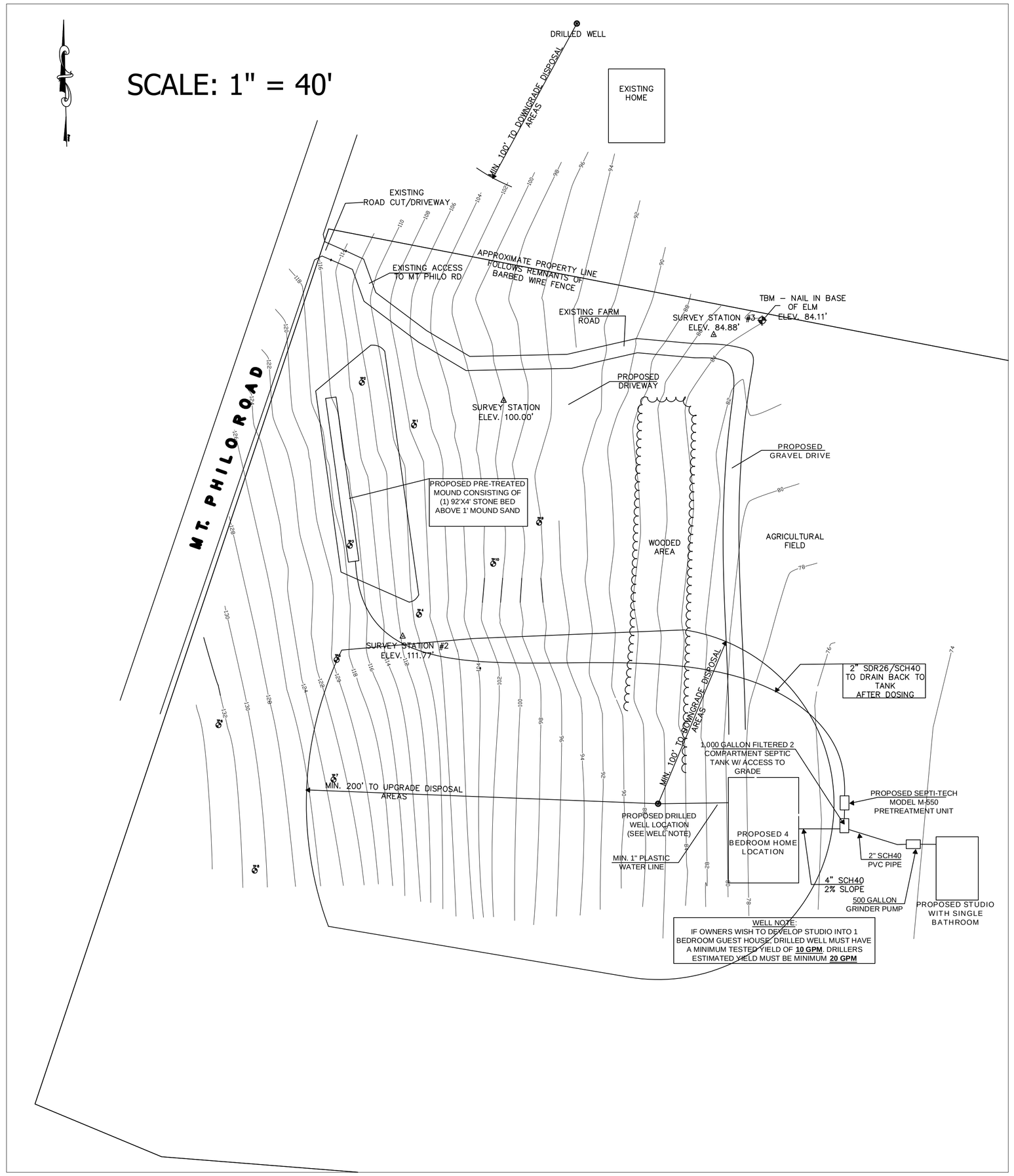

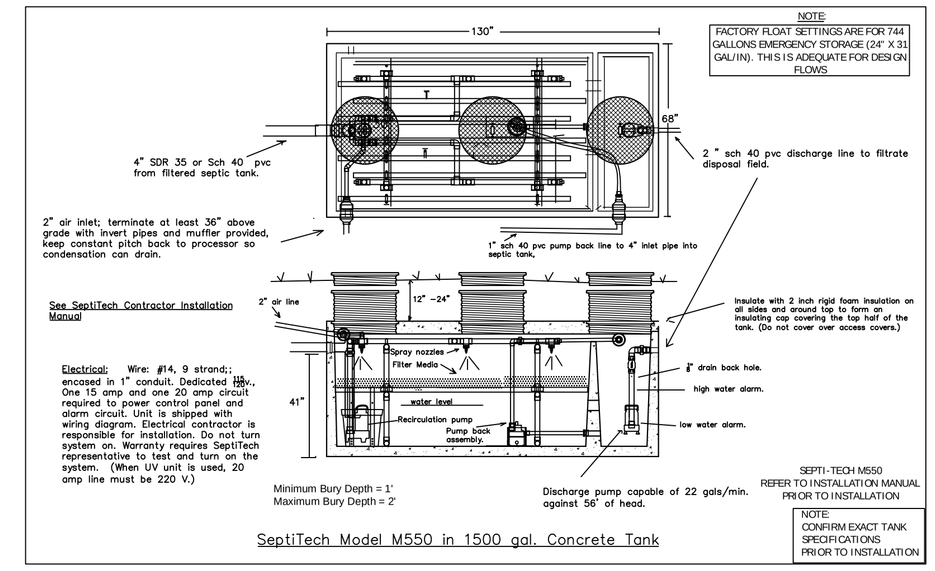

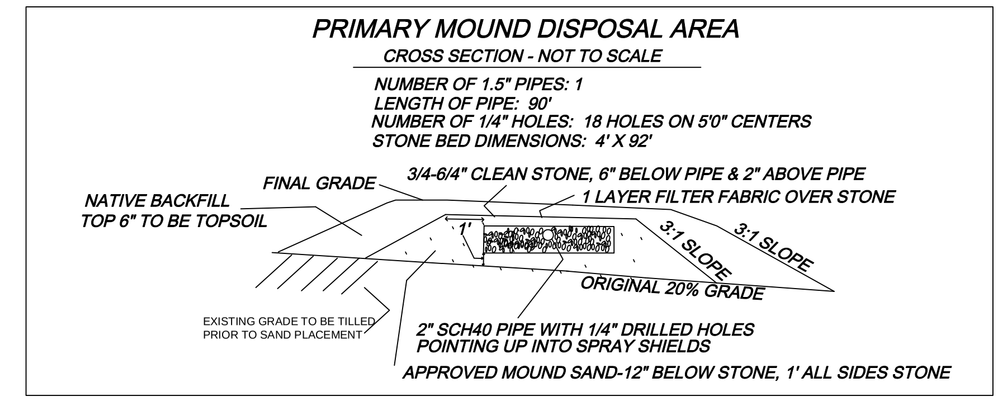

MOUND DESIGN PROGRAM

TOWN	CHARLOTTE
APPLICANT'S NAME	FOOTE
DATE: 5/20/08 SPECIALIST	Jeff Kelley
SAND HEIGHT AT UPPER END OF LEVEL AREA	1.8 FEET
MOUND WIDTH (short dimension of level area)	6 FEET
MOUND LENGTH (long dimension of level area)	94 FEET
NATURAL GROUND SLOPE	20 PERCENT
MOUND FRONT SLOPE	33 PERCENT
MOUND SIDE AND BACK SLOPE (IF DIFFERENT)	33 PERCENT
DEPTH OF STONE	6 INCHES
AREA OF THE DISPOSAL FIELD	358 SQUARE FT
SOIL COVER AT END OF LEVEL AREA (IF NOT 12")	12 INCHES

3 feet sand depth at lower end of level area
23.1 feet from level area to downhill sand toe
9 yards of stone (with safety factor)
312.2 yards of sand (with safety factor)

PRESSURE DISTRIBUTION SYSTEM with symetrical laterals

NUMBER OF LATERALS	1
LENGTH OF EACH LATERAL	90 FEET
NUMBER OF ORIFICES PER LATERAL	18
NUMBER OF ORIFICES IN MANIFOLD	1
DISTANCE BETWEEN ORIFICES (ON CENTER)	5 FEET
DISTANCE BETWEEN MANIFOLD AND FIRST ORIFICE	5 FEET
DESIGN PRESSURE HEAD (IF NOT 2.31)	2.5 FEET
DIAMETER OF ORIFICES (ENTER AS A FRACTION)	0.2500 INCHES
ELEVATION FROM PUMP TO LATERALS (0 IF SIPHON)	50 FEET
DIAMETER OF DELIVERY PIPE	2 INCHES
LENGTH OF DELIVERY PIPE	300 FEET
MANIFOLD LENGTH FROM DELIVERY PIPE TO LATERAL	5 FEET
DIAMETER OF MANIFOLD PIPE	2 INCH
DIAMETER OF LATERAL PIPES	2 INCH
22.12982829	
FRICTION LOSS THROUGH SEGMENT 1	0.044850586
FRICTION LOSS ENTIRE LATERAL	0.291944092
DISCHARGE RATE FIRST ORIFICE	1.164727805
DISCHARGE RATE LAST ORIFICE	1.105671263
PERCENT DIFFERENCE FIRST TO LAST ORIFICE	5.0704%
TOTAL HEAD LOSS (EL+DELIV+MANIFOLD+LATERALS)	55.803
ADD ELEVATION IF NOT ENTERED ABOVE)	
TOTAL DELIVERY PIPE FLOW	22.121 GALLONS PER MINUTE
VOID VOLUME OF DELIVERY PIPE	48.96 GALLONS

PUMP MUST BE CAPABLE OF 22.12 G.P.M. AGAINST 55.8 FEET OF HEAD

DIMENSIONS OF SAND BED
TOP BASE= 100.8 ft BOTTOM BASE= 140.2 ft
/---------- - - - - ----\
|
3.4 feet from level area to uphill sand toe \
| 5.5 \
|---------- - - - --------| upper to side toe
| 6 ft wide level area | \
| | \
|---------- 94 ft long level area -------| 9.1 \
| lower to side toe
23.1 feet from level area to downhill sand toe \
| \
- - - - - - -
DIMENSIONS OF FINAL GRADED MOUND
TOP BASE= 104.6 ft BOTTOM BASE= 155.5 ft
/---------- - - - - ----\
|
5.3 feet from level area to uphill sand toe \
| 8.5 \
|---------- - - - --------| upper to side toe
| 6 ft wide level area | \
| | \
|---------- 94 ft long level area -------| 12.1 \
| lower to side toe
30.8 feet from level area to downhill sand toe \
| \

Septic Disposal Area Calculations:
4 Bedroom Single Family Residence: 490 gpd
POTENTIAL 1 Bedroom Studio: 140 gpd
TOTAL FLOWS: 630 gpd
FINE SANDY LOAM SOIL, SHWT @ 14"
20% SLOPE
(F) = 26.2
(H) = 0.6'
LLR = 26.2 * 0.6 = 15.7GAL/LIN.FT
630 / 15.7 gal/lin.ft = 40' min. system length
Pre-Treated mound loading rate: 2 gal/sqft/day
Therefore, min. 365 sqft of stone bed is needed
Proposed system size: 92'x4' stone bed over 1' mound sand
Proposed system area: 92 x 4 = 368 sqft

MINIMUM DRILLED WELL WATER SUPPLY ISOLATION DISTANCES

POTENTIAL SOURCE OF CONTAMINATION	SEPARATION DISTANCE (FEET)
Roadway, Parking Lot (Outer Edge of Shoulder)	25
Driveway (<3 Residences)	15
Sewage System Disposal Fields	A.
Subsurface Wastewater Piping and Related Tanks	50
Property Line	10 B.
Limit of Herbicide Application on Utility ROW	100 C.
Surface Water	10 D.
Flood Ways	E.
	10
Concentrated Livestock Holding Area & Manure Storage	200
Hazardous Waste Disposal Site	F.
Non-Sewage Wastewater Disposal Field	F.

A. The drilled well water supply for this project must be installed in the approved location depicted on this plan. The location of this drilled well site may not be altered without prior approval from the Design Engineer

B. Increase to 50 Ft. when adjacent to agricultural land.

C. Applies to ROW where herbicides have been applied in the past 12 months or may be applied in the future. This distance may be increased to 200 Ft. depending on the active ingredient in the herbicide according to Vermont Regulations for Control of Pesticides.

D. For Public water sources see Water Supply Rule, Appendix A, Part 3, Subpart 338

E. Water sources shall not be located in a floodway.

F. If a water source is potentially downgradient of a source of contamination, then the Agency shall apply the criteria listed in Water Supply Rule Subpart 3142E.

TEST PIT LOGS, APRIL 2006
JEFF KELLEY, SPENCER HARRIS
NOTE: TP'S 1, 2, 3, 4, 9, AND 10 ARE USED FOR SEPTIC SYSTEM DESIGN

TP-1:
0 - 4" FINE SANDY LOAM TOPSOIL
4 - 18" FRIABLE FINE SANDY LOAM, YELLOW BROWN FAINT MOTTLES @14"
18 - 38" CLAY LOAM, MOTTLED
28 - 42" CLAY LOAM, MOTTLED

TP-2:
0 - 4" FINE SANDY LOAM TOPSOIL
4 - 18" FRIABLE FINE SANDY LOAM, YELLOW BROWN FAINT MOTTLES @14"
18 - 38" CLAY LOAM, MOTTLED

TP-3:
0 - 4" FINE SANDY LOAM TOPSOIL
4 - 18" FRIABLE FINE SANDY LOAM, YELLOW BROWN FAINT MOTTLES @14"
18 - 38" CLAY LOAM, MOTTLED

TP-4:
0 - 4" FINE SANDY LOAM TOPSOIL
4 - 26" FRIABLE FINE SANDY LOAM, YELLOW BROWN FAINT MOTTLES @20"
26 - 38" CLAY LOAM, MOTTLED

TP-5:
0 - 4" FINE SANDY LOAM TOPSOIL
4 - 26" FRIABLE FINE SANDY LOAM, YELLOW BROWN DISTINCT MOTTLES @16"
26 - 40" CLAY LOAM, MOTTLED

TP-6:
0 - 4" FINE SANDY LOAM TOPSOIL
4 - 26" FRIABLE FINE SANDY LOAM, YELLOW BROWN FAINT MOTTLES @14"
26 - 38" CLAY LOAM, MOTTLED

TP-7:
0 - 4" FINE SANDY LOAM TOPSOIL
4 - 26" FRIABLE FINE SANDY LOAM, YELLOW BROWN FAINT MOTTLES @15"
26 - 38" CLAY LOAM, MOTTLED

TP-8:
0 - 4" FINE SANDY LOAM TOPSOIL
4 - 16" SILT LOAM, WET
16 - 30" CLAY LOAM, FIRM

TP-9:
0 - 4" FINE SANDY LOAM TOPSOIL
4 - 26" FRIABLE FINE SANDY LOAM, YELLOW BROWN FAINT MOTTLES @17"
26 - 38" CLAY LOAM, MOTTLED

TP-10:
0 - 4" FINE SANDY LOAM TOPSOIL
4 - 20" FRIABLE FINE SANDY LOAM, YELLOW BROWN FAINT MOTTLES @14"
20 - 38" CLAY LOAM, MOTTLED

MINIMUM SEPTIC SYSTEM ISOLATION DISTANCES

ITEM	HORIZONTAL DISTANCE (FT) LEACHFIELD	SEPTIC TANK
RIVER, STREAM	50	25
DRAINAGE SWALE, ROAD DITCH	25	– –
TOWN WATER PIPE	50	50
HOUSE WATER SERVICE	25	25
ROADWAYS, DRIVEWAYS	10	5
TOP OF SLOPE > 30%	25	10
PROPERTY LINE	25	10
TREES	10	10
OTHER DISPOSAL FIELD	10	– –
FOUNDATIONS, FOOTING DRAINS	a.	10

A. If foundation drain is upslope from leachfield, Minimum 25'
If foundation drain is directly downslope from leachfield, Minimum 75'

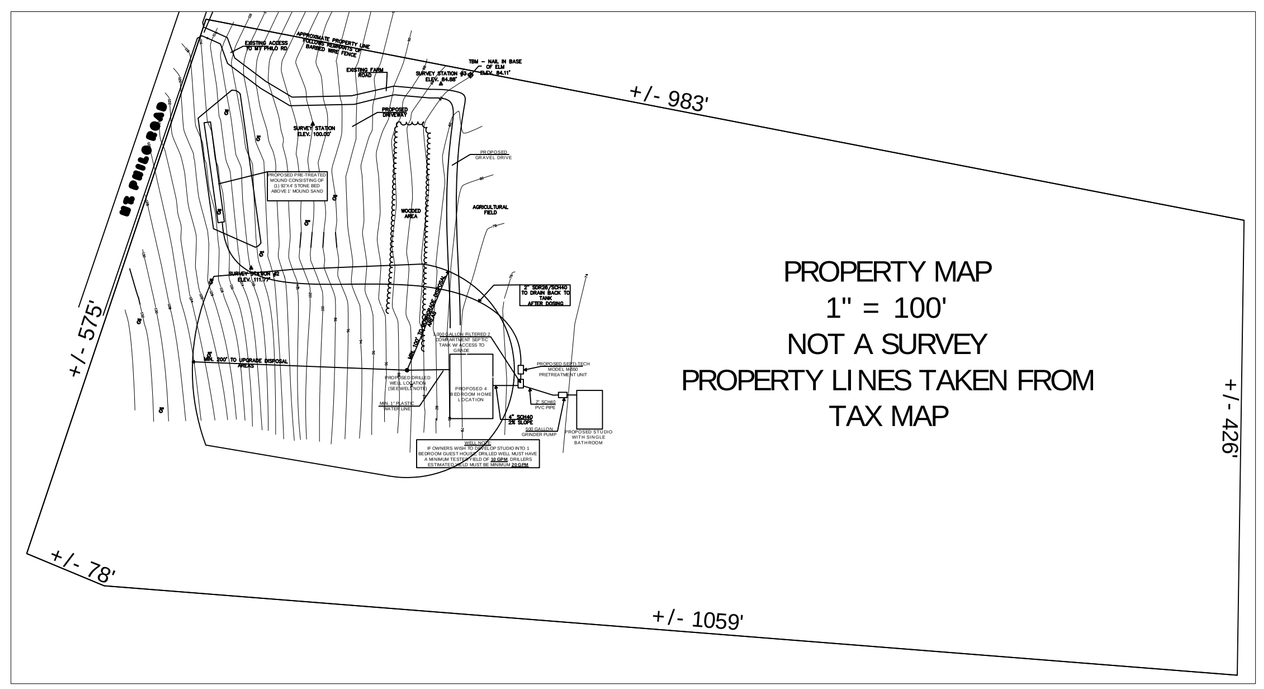

PROPERTY MAP
1" = 100'
NOT A SURVEY
PROPERTY LINES TAKEN FROM TAX MAP

PROPOSED SEPTIC DISPOSAL PLAN
FOOTE PROPERTY, +/- 13 ACRES
MOUNT PHILO ROAD, CHARLOTTE

JEFF KELLEY
VT SITE TECH #425-B
MIDDLEBURY, VT (802)-349-5463

SCALE: AS NOTED

PAGE 1/1

DATE: 02 JUNE 2008

This document was created with Win2PDF available at http://www.win2pdf.com.
The unregistered version of Win2PDF is for evaluation or non-commercial use only.
This page will not be added after purchasing Win2PDF.