CONSTRUCTION SPECIFICATIONS - MOUND

1. MOUND CONSTRUCTION PROCEDURES ARE JUST AS IMPORTANT AS THE MOUND DESIGN. GOOD DESIGN WITH POOR CONSTRUCTION WILL RESULT IN THE MOUND OPERATING POORLY AND MAY RESULT IN FAILURE. PROPER EQUIPMENT IS ESSENTIAL. SMALL TRACK TYPE EXCAVATORS WORK BEST. WHEEL TYPE TRACTORS ARE TOO DIFFICULT TO MANEUVER IN THE FILL. THE FOLLOWING IS A STEP-BY-STEP PROCEDURE FOR MOUND CONSTRUCTION, WHICH HAS BEEN TRIED AND PROVEN. OTHER TECHNIQUES COULD BE USED AS LONG AS THE BASIC PRINCIPLES OF MOUND DESIGN, OPERATION, AND CONSTRUCTION ARE NOT VIOLATED.

2. SUBMIT A REPRESENTATIVE SAMPLE (ENOUGH TO FILL A 5 GALLON BUCKET) OF MOUND SAND FROM THE INTENDED SOURCE FOR TESTING ACCORDING TO ASTM D 422 (KNIGHT CONSULTING ENGINEERS, PHELPS ENGINEERING, OTTER CREEK ENGINEERING, AND VERMONT TESTING CAN ALL PERFORM THIS TEST). SUBMIT A COPY OF THE RESULTS TO THE DESIGNER PRIOR TO INITIATING CONSTRUCTION.

3. STAKE OUT THE MOUND ON THIS SITE SO THAT THE TRENCHES OR BED RUN PERPENDICULAR TO THE DIRECTION OF THE SLOPE. REFERENCE STAKES ARE RECOMMENDED IN CASE CORNER STAKES ARE DISTURBED. LINCOLN APPLIED GEOLOGY, INC., MUST STAKEOUT OR VERIFY THIS TASK.

4. STAKE OUT CORNERS OF THE BED AND DETERMINE THE BOTTOM ELEVATION OF THE BED.

5. DETERMINE WHERE THE FORCE MAIN FROM THE PUMP CHAMBER CONNECTS TO THE DISTRIBUTION SYSTEM IN THE MOUND.

6. TRENCH AND LAY THE FORCE MAIN FROM THE PUMP CHAMBER TO THE MOUND. LAY THE PIPE 5' BELOW THE GROUND SURFACE FOR FROST PROTECTION. WHERE THERE IS LESS THAN 5' OF COVER, INSULATE WITH 2" OF RIGID POLYSTYRENE INSULATION 4' WIDE (2' EITHER SIDE OF PIPE, PLACED IN TWO 1" LAYERS WITH STAGGERED JOINTS). CUT AND CAP THE PIPE 1' BENEATH THE GROUND SURFACE. BACKFILL AND COMPACT SOIL AROUND PIPE TO PREVENT BACK SEEPAGE OF EFFLUENT ALONG PIPE. THIS STEP MUST BE DONE BEFORE PLOWING TO AVOID COMPACTING AND DISTURBANCE OF SURFACE.

7. INSTALL THE CURTAIN DRAIN (IF SHOWN ON PLANS).

8. CHECK THE MOISTURE CONTENT OF THE SOIL AT 7 - 8" DEEP. IF IT IS TOO WET, SMEARING AND COMPACTION WILL RESULT, THUS REDUCING THE INFILTRATION CAPACITY OF THE SOIL. SOIL MOISTURE CAN BE DETERMINED BY ROLLING A SOIL SAMPLE BETWEEN THE HANDS. IF IT ROLLS INTO A RIBBON, THE SITE IS TOO WET TO PREPARE. IF IT CRUMBLES, SOIL PREPARATION CAN PROCEED.

9. CUT TREES TO GROUND LEVEL. REMOVE EXCESS VEGETATION BY MOWING. DO NOT REMOVE STUMPS. PREPARE THE SITE BY USING A MOLDBOARD PLOW TO CREATE 8 - 10" DEEP FURROWS PERPENDICULAR TO THE SLOPE. FURROWS MUST BE THROWN UP HILL. CHISEL PLOWING MAY BE USED IF A MOLDBOARD PLOW IS NOT AVAILABLE. ROTOTILLING MUST NOT BE DONE ON HEAVY SOILS BUT CAN BE USED ON NON-STRUCTURAL SOIL SUCH AS SANDS. ALTERNATIVELY, PLOWING CAN BE DONE BY USING AN EXCAVATOR BUCKET TO PULL THE SOIL INTO FURROWS PARALLEL WITH THE GROUND CONTOURS (THE RESULTING SURFACE MUST LOOK AS THOUGH IT HAD BEEN PLOWED WITH A MOLDBOARD PLOW, AS OUTLINED ABOVE). IMMEDIATE CONSTRUCTION AFTER PLOWING IS NECESSARY. AVOID RUTTING OF PLOWED AREA WITH VEHICULAR TRAFFIC. DESIGNER INSPECTION REQUIRED AT THIS POINT.

10. EXTEND THE EFFLUENT PIPE TO SEVERAL FEET ABOVE THE GROUND SURFACE.

11. PLACE THE APPROVED FILL MATERIAL AROUND THE EDGE OF THE PLOWED AREA. KEEP WHEELS OF TRUCK OFF PLOWED AREAS. MINIMIZE TRAFFIC ON THE DOWNSLOPE SIDE OF THE MOUND. WORK FROM THE END AND UPSLOPE SIDE.

12. MOVE THE FILL MATERIAL INTO PLACE USING A SMALL TRACK TYPE TRACTOR WITH A BLADE. ALWAYS KEEP A MINIMUM OF 6 INCHES OF SAND BENEATH TRACKS TO PREVENT COMPACTION OF THE NATURAL SOIL.

13. PLACE THE FILL MATERIAL TO THE REQUIRED DEPTH, WHICH IS THE TOP OF THE TRENCHES OR BED. SHAPE SIDES TO THE DESIRED SLOPE. INSPECTION REQUIRED AT THIS POINT.

14. WITH THE BLADE OF THE TRACTOR FORM THE BED OR TRENCHES. HAND LEVEL THE BOTTOM OF THE BED. MAKE SURE BOTTOM IS AT THE SAME ELEVATION AND LEVEL.

15. PLACE THE COARSE AGGREGATE IN THE TRENCHES OR BED. IT SHOULD BE ¾ TO 1½", WASHED, DURABLE AGGREGATE (I.E. NOT LIMESTONE OR MARBLE). LEVEL AGGREGATE TO THE DESIGN DEPTH.

16. PLACE THE DISTRIBUTION SYSTEM ON THE AGGREGATE. CONNECT THE MANIFOLD TO THE FORCE MAIN FROM THE PUMP CHAMBER OR SIPHON CHAMBER. SLOPE MANIFOLD SLIGHTLY TOWARD DISTRIBUTION LATERALS. LAY LATERALS LEVEL, REMOVING RISES AND DIPS. PLACE ORIFICES UPWARDS. INSPECTION REQUIRED AT THIS POINT (TO OBSERVE DISCHARGE RATE AND PRESSURE TESTING).

17. PLACE SHIELDS ON ORIFICES AND PROPERLY CEMENT ALL COMPONENTS. PLACE 2" OF AGGREGATE OVER THE DISTRIBUTION PIPE.

18. PLACE A SYNTHETIC NON-WOVEN FILTER FABRIC (MIRAFI 140N OR EQUIVALENT) OVER THE ENTIRE STONE BED. OVERLAP JOINTS BY 12" MINIMUM. PLACE AN 8' X 8' MAT OF RIGID POLYSTYRENE INSULATION, 2" THICK, CENTERED OVER FORCE MAIN RISER. PLACE INSULATION IN TWO LAYERS (1" EACH) AND STAGGER THE JOINT PATTERN.

19. PLACE SOIL ON TOP OF THE BED OR TRENCH TO A DEPTH OF 1' IN CENTER AND 6" AT OUTER EDGE OF BED OR TRENCHES. THIS MAY BE A SUBSOIL OR TOPSOIL.

20. PLACE 6" OF GOOD QUALITY TOPSOIL OVER THE ENTIRE MOUND SURFACE. THIS WILL RAISE THE ELEVATION AT THE CENTER OF THE MOUND TO A MINIMUM OF 1.5' AND THE OUTSIDE EDGES OF BED OR TRENCHES 1'. INSPECTION REQUIRED AT THIS POINT.

21. LANDSCAPE THE MOUND BY PLANTING GRASS, USING THE BEST VEGETATION ADAPTABLE TO THE AREA. A MIXTURE OF 90% BIRDSFOOT TREEFOIL AND 10% TIMOTHY MAY BE DESIRABLE IF THE MOUND IS NOT MANICURED. IF MANICURING IS DESIRED, A COMBINATION OF 60% BLUEGRASS, 30% CREEPING RED FESCUE AND 10% ANNUAL RYE GRASS MAY BE THE DESIRED VEGETATIVE COVER. SHRUBS CAN BE PLANTED AROUND THE BASE AND UP THE SIDESLOPES. THEY SHOULD BE SOMEWHAT MOISTURE TOLERANT SINCE THE TOE OF THE MOUND MAY BE SOMEWHAT MOIST DURING VARIOUS TIMES OF THE YEAR. KEEP ALL TREES AND SHRUBS AWAY FROM THE TOP OF THE MOUND, AS ROOT SYSTEMS CAN DESTROY THE DISTRIBUTION NETWORK.

22. MOUND MAINTENANCE INVOLVES PUMPING THE SEPTIC TANK AND PUMP CHAMBER EVERY 1 TO 3 YEARS TO AVOID CARRYOVER OF SOLIDS INTO THE MOUND. A GOOD WATER CONSERVATION PLAN WITHIN THE HOUSE ASSURES THAT THE MOUND WILL NOT BE OVERLOADED. AVOID EXCESS TRAFFIC ON THE MOUND AREA. WINTER TRAFFIC ON MOUND SHOULD BE AVOIDED TO MINIMIZE FROST PENETRATION. INSPECT PUMP CHAMBER AND SEPTIC TANK EACH YEAR TO DETERMINE THE LEVEL OF SLUDGE ACCUMULATION. MOW TWICE A YEAR.

23. UTILITIES INFORMATION SHOWN ON THIS PLAN WAS OBTAINED FROM AVAILABLE SOURCES AND MAY OR MAY NOT BE EITHER ACCURATE OR COMPLETE. THE CONTRACTORS SHALL VERIFY EXACT LOCATION OF EXISTING UTILITIES AND SHALL BE RESPONSIBLE FOR ANY DAMAGE TO ANY UTILITY, PUBLIC OR PRIVATE, SHOWN OR NOT SHOWN ON THIS PLAN.

24. ALL FILL AROUND THE STRUCTURES SHALL BE PLACED IN 12" LIFTS AND THOROUGHLY COMPACTED TO 95% OF MAXIMUM DENSITY AT OPTIMUM MOISTURE CONTENT.

25. THIS DESIGN MUST BE INSPECTED BY LINCOLN APPLIED GEOLOGY, INC., LINCOLN, VERMONT, TO ENSURE COMPLIANCE WITH THESE PLANS. LINCOLN APPLIED GEOLOGY, INC., WAIVES ANY AND ALL RESPONSIBILITY AND LIABILITY FOR PROBLEMS THAT ARISE FROM FAILURE TO FOLLOW SPECIFICATIONS, AND THE DESIGN INTENT THAT THE PLANS CONVEY, AND FROM FAILURE TO HAVE BEEN NOTIFIED BY THE CONTRACTOR FOR INSPECTIONS.

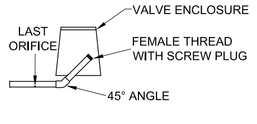

FLUSHING VALVE DETAIL

NOT TO SCALE

SEPTIC TANK OPERATION & MAINTENANCE RECOMMENDATIONS

1. THE SEPTIC TANK'S PURPOSE IS TO SETTLE OUT SOLIDS, CONTAIN THE SCUM AND PASS TREATED EFFLUENT. BACTERIA WITHIN THE SEPTIC TANK HELPS DECOMPOSE THE SOLIDS. SHOULD ANY SOLIDS PASS THROUGH THE SEPTIC TANK INTO THE SYSTEM, PREMATURE CLOGGING OF THE PIPING, STONE OR NATIVE SOIL BENEATH THE SYSTEM IS LIKELY TO OCCUR. ONLY HUMAN WASTES SHOULD ENTER THE SEWAGE SYSTEM. WATER USE SHOULD BE CONSERVATIVE AND CLEANING AGENTS CANNOT ENTER THE SYSTEM, AS THEY KILL BACTERIA.

2. THE STATE FLOW FIGURES OF 140 GAL/DAY/BEDROOM ARE BASED ON SHORT TERM PEAK USE PERIODS (I.E., DAILY EVENTS). ACTUAL FLOWS SHOULD AVERAGE 75-100 GALLONS PER DAY, PER BEDROOM.

3. ONCE PER YEAR, THE DEPTH OF SCUM AND SLUDGE IN THE SEPTIC TANK SHOULD BE MEASURED AND THE TANK SHALL BE PUMPED IF:

A. THE SLUDGE LEVEL IS WITHIN 12 INCHES OF THE BOTTOM OF THE OUTLET.

B. THE SCUM LAYER IS WITHIN 3 INCHES OF THE TOP OF THE OUTLET.

C. IF A OR B IS ANTICIPATED TO OCCUR PRIOR TO THE NEXT INSPECTION.

D. IN ANY CASE, THE TANK SHALL BE PUMPED AT A MAXIMUM 5 YEAR INTERVAL.

4. ONCE A YEAR, THE DISTRIBUTION BOX AND/OR PUMP STATION SHOULD BE INSPECTED AND ANY SETTLED SOLIDS REMOVED.

5. THE EFFLUENT FILTER SHOULD BE INSPECTED AND CLEANED ANNUALLY.

6. ABOVE ITEMS 1-5 ARE INTENDED TO PROLONG THE LIFE OF THE SYSTEM, NOT GUARANTEE IT.

SEWAGE DESIGN INFORMATION

1. THE SEWAGE DISPOSAL SYSTEM SHALL BE CONSTRUCTED IN ACCORDANCE WITH APPLICABLE TOWN REGULATIONS AND THE VERMONT ENVIRONMENTAL PROTECTION RULES.

2. THE FOLLOWING MINIMUM ISOLATION DISTANCES SHALL BE MAINTAINED FROM THE DISPOSAL AREA TO:

PROPERTY LINE	25 FEET
BUILDING (WITH FOOTING DRAIN) UPSLOPE OR SIDESLOPE	35 FEET
BUILDING (WITH FOOTING DRAIN) DOWNSLOPE	75 FEET
DRIVEWAYS & PARKING LOTS	10 FEET
TREES	10 FEET

3. BASIS OF DESIGN:

NO. OF BEDROOMS	4
DESIGN FLOW	490
PERCOLATION RATE	<60 MIN/INCH
LOADING RATE, Q (TRENCHES)	1.0 GAL/SF/DAY - 6" OF STONE

4. SEPTIC TANK

A. A 1,000 GALLON PRECAST CONCRETE SEPTIC TANK, CAMP PRECAST OR APPROVED EQUAL SHALL BE USED, WITH THREE ACCESS COVERS; 4,000 PSI CONCRETE; WATERPROOF JOINTS AND SET ON THOROUGHLY COMPACTED SUBBASE. THE OUTLET BAFFLE SHALL HAVE AN EFFLUENT FILTER & A TWO (2) FOOT DIAMETER RISER TO GRADE WITH STEEL COVER.

B. THE USE OF GARBAGE DISPOSALS IS NOT RECOMMENDED.

5. MISC.:

A. IF A WATER TREATMENT SYSTEM IS GOING TO BE USED, THE BACKWASH WATER MAY NOT BE DISCHARGED INTO THE DISPOSAL SYSTEM.

STATE OF VERMONT MOUND SAND SPECIFICATIONS

Fill Material: The fill material from the natural soil plowed surface to the top of the trench or bed shall be sand texture with one of the following sieve analyses:

1.

Sieve Number	Opening (mm)	Percent Passing, by Weight
3/8	9,500	85 - 100
40	0,420	25 - 75
60	0,240	0 - 30
100	0,149	0 - 10
200	0,074	0 - 5

2.

Sieve Number	Opening (mm)	Percent Passing, by Weight
4	4,750	95 - 100
8	2,380	80 - 100
16	1,190	50 - 85
30	0,590	25 - 60
50	0,297	10 - 30
100	0,149	2 - 10

3.

Sieve Number	Opening (mm)	Percent Passing, by Weight
3/8	9,500	85 - 100
40	0,420	30 - 50
200	0,074	0 - 10

The material must meet specifications 1, 2, or 3. Interpolation of analyses is not permitted. Fill material 2 is ASTM Specification C-33 and is intended for manufactured material.

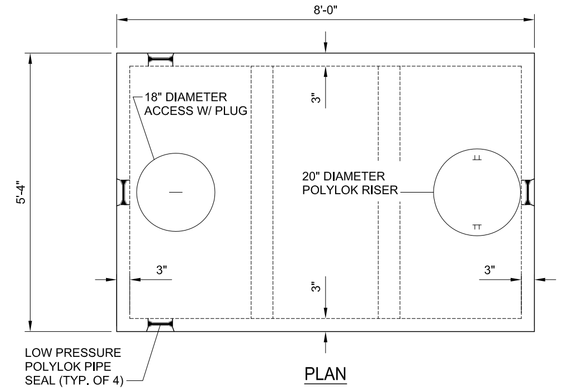

PLAN

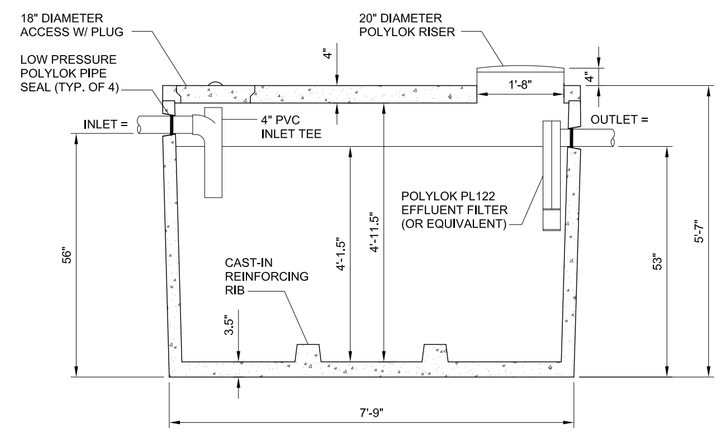

SECTION

1,000 GALLON PRECAST CONCRETE SEPTIC TANK

NOT TO SCALE

1,000 GALLON SEPTIC TANK NOTES:

1. INLET, OUTLET, SEAM, AND CASTING HOLES TO BE SEALED WITH HYDRAULIC CEMENT AND/OR BUTYLENE GASKET.
2. TANK TO BE SET LEVEL
3. DIMENSIONS MAY VARY AMONG DIFFERENT MANUFACTURERS.

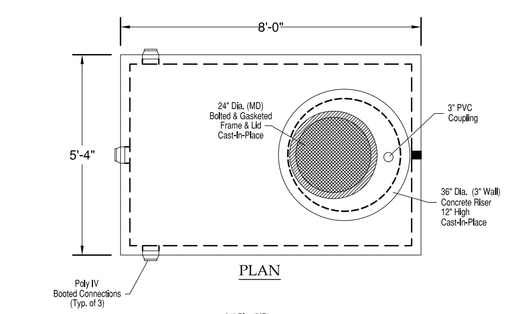

PLAN

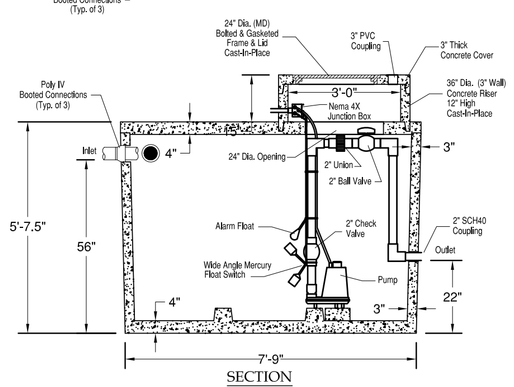

SECTION

1000 GALLON PRECAST CONCRETE PUMP STATION

NOT TO SCALE

DESIGN NOTES:

1. 5000 PSI CONCRETE, 28 DAY STRENGTH.
2. LOW PRESSURE SEALS DESIGNED TO ACCEPT 4" C.I. OR PVC PIPE.
3. REQUIRES EFFLUENT PUMP CAPABLE OF PUMPING A MINIMUM OF 25.84GPM VERSUS 21.77' TDH, AND A SUPER SINGLE PUMP SWITCH WITH A 4.5" SWING SETTING (+/-125 GALLONS) SET 6" ABOVE THE BASE OF THE PUMP WITH HIGH LEVEL ALARM SET 6" ABOVE THE PUMP ON SETTING.
4. IT SHOULD BE NOTED THAT ANY DEVIATION IN THE LOCATION OR ELEVATION OF THE SEPTIC TANK, PUMP STATION, OR THE DISPOSAL SYSTEM FROM THE DESIGNED LOCATION MAY REQUIRE A DIFFERENT SIZE PUMP.
5. ALL ELECTRICAL WIRING MUST BE DONE BY A LICENSED ELECTRICIAN.
6. PROPER FLOAT TREE ASSEMBLY IS REQUIRED AS SPECIFIED IN DETAIL.

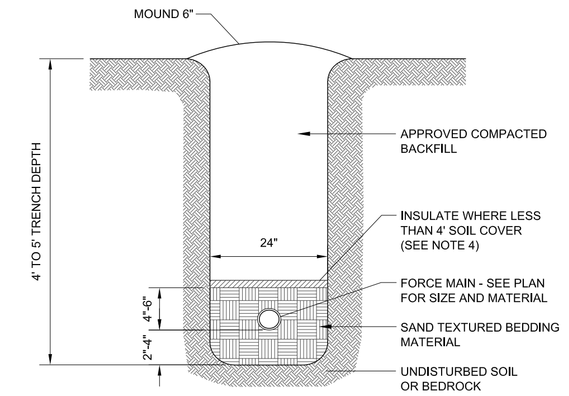

FORCE MAIN TRENCH NOTES:

1. BACKFILL AND BEDDING SHALL BE PROPERLY COMPACTED.
2. BEDDING MATERIAL SHALL NORMALLY CONSIST OF WELL-GRADED SANDS AND GRAVELS WITH A MAXIMUM SIZE OF 3/4".
3. BACKFILL SHALL NOT CONTAIN:
   -ANY STONES MORE THAN 12" (1 1/2" MAXIMUM DIAMETER WITHIN 2' OF THE OUTSIDE OF THE PIPE) IN THE LARGEST DIMENSION.
   -BE GREATER THAN 50 POUNDS.
   -CONTAIN ANY FROZEN, WET OR ORGANIC MATERIAL.
4. USE RIGID INSULATION AT THE RATE OF 1" FOR EVERY FOOT LESS THAN 4'.
5. FORCE MAIN MUST BE TESTED FOR LEAKAGE.
6. AT ANY CROSSING UNDER A ROAD OR DRIVE, FORCE MAIN IS TO BE ENCASED IN A 4" PVC SLEEVE, SAID SLEEVE IS TO EXTEND 8' IN EITHER DIRECTION FROM EDGE OF TRAVELED WAY.
7. THE SIDES OF THE TRENCHES 4' OR MORE IN DEPTH ENTERED BY PERSONNEL SHALL BE SHEETED OR SLOPED TO THE ANGLE OF REPOSE AS DEFINED BY O.S.H.A. STANDARDS.

FORCE MAIN TRENCH DETAIL

NOT TO SCALE

ITEM	LEACHFIELD	SEPTIC TANK	SEWER
DRILLED WELL	(b)	50	50
GRAVEL PACK WELL, SHALLOW WELL OR SPRING	(b)	75	75
LAKES, PONDS AND IMPOUNDMENT'S	50	25	25
RIVER, STREAM	50	25	10
DRAINAGE SWALES, ROADWAY DITCHES	25	--	--
MAIN OR MUNICIPAL WATER LINES	50	50	(d)
SEWER SERVICE LINES	25	25	(d)
ROADWAYS, DRIVEWAYS, PARKING LOTS	10	5	(c)
TOP OF EMBANKMENT, OR SLOPE > 30%	25	10	--
PROPERTY LINE	25[1]	10	10
TREES	10	10	10
OTHER DISPOSAL FIELD OR REPLACEMENT AREA	10[2]	--	--
FOUNDATION, FOOTING DRAINS, CURTAIN DRAINS	35[3]	10	--
PUBLIC COMMUNITY WATER SUPPLY (e)	(f)	(f)	(f)
SUCTION WATER LINE	100	50	50

THESE DISTANCES MAY BE REDUCED WHEN EVIDENT THAT THE DISTANCE IN UNNECESSARY TO PROTECT AN ITEM OR INCREASED IF NECESSARY TO PROVIDE ADEQUATE PROTECTION.

(a) ISOLATION DISTANCES APPLY REGARDLESS OF PROPERTY LINE AND OWNERSHIP.
(b) SEPARATION BETWEEN POTABLE WATER SUPPLIES AND LEACHFIELD'S SHALL BE DETERMINED BY METHODS IN THE VERMONT WATER AND SUPPLY RULE, APPENDIX 21-A, PART 11, 11.4.
(c) SEWERS UNDER ROADS, DRIVEWAYS OR PARKING LOTS MAY REQUIRE PROTECTIVE CONDUITS OR SLEEVES.
(d) SEPARATION OF PRESSURE WATER LINES CONSIDERED AS "SERVICE CONNECTIONS" AND SEWER LINES SHALL ADHERE TO THE VERMONT PLUMBING RULES. SEPARATION OF PRESSURE WATER LINES (CONSIDERED TO BE PART OF A PUBLIC WATER SYSTEM AS DEFINED BY THE VERMONT WATER SUPPLY RULE) AND SEWER LINES SHALL ADHERE TO THE REQUIREMENTS OF THE VERMONT WATER SUPPLY RULE.
(e) THIS REFERS TO PUBLIC COMMUNITY WATER SYSTEMS, AS DEFINED IN THE VERMONT WATER SUPPLY RULE.
(f) CONTACT DEPARTMENT OF ENVIRONMENTAL CONSERVATION'S WATER SUPPLY DIVISION, 103 SOUTH MAIN STREET, WATERBURY, VERMONT FOR ISOLATION DISTANCES RELATIVE TO PUBLIC COMMUNITY WATER SUPPLY.

WASTEWATER SYSTEM ISOLATION DISTANCES

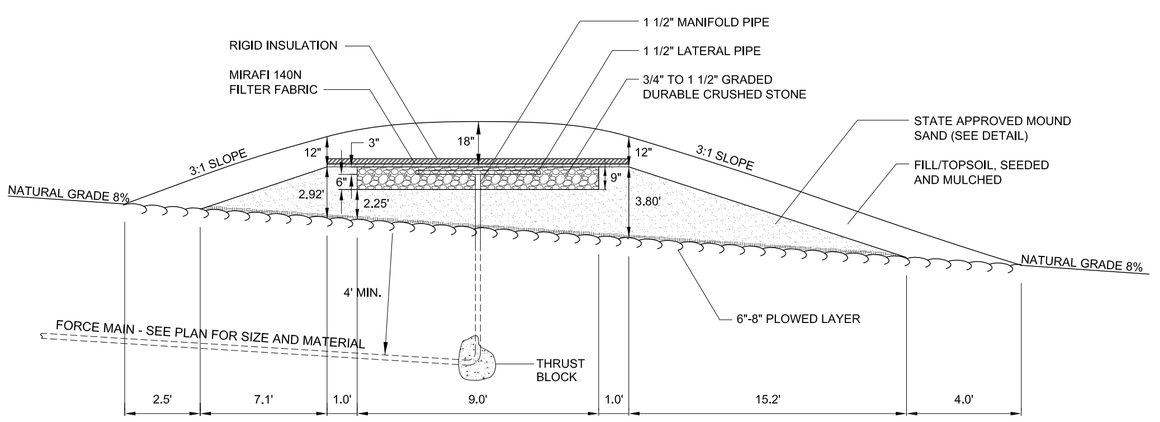

MOUND TYPE DISPOSAL SYSTEM - SECTION VIEW

NOT TO SCALE

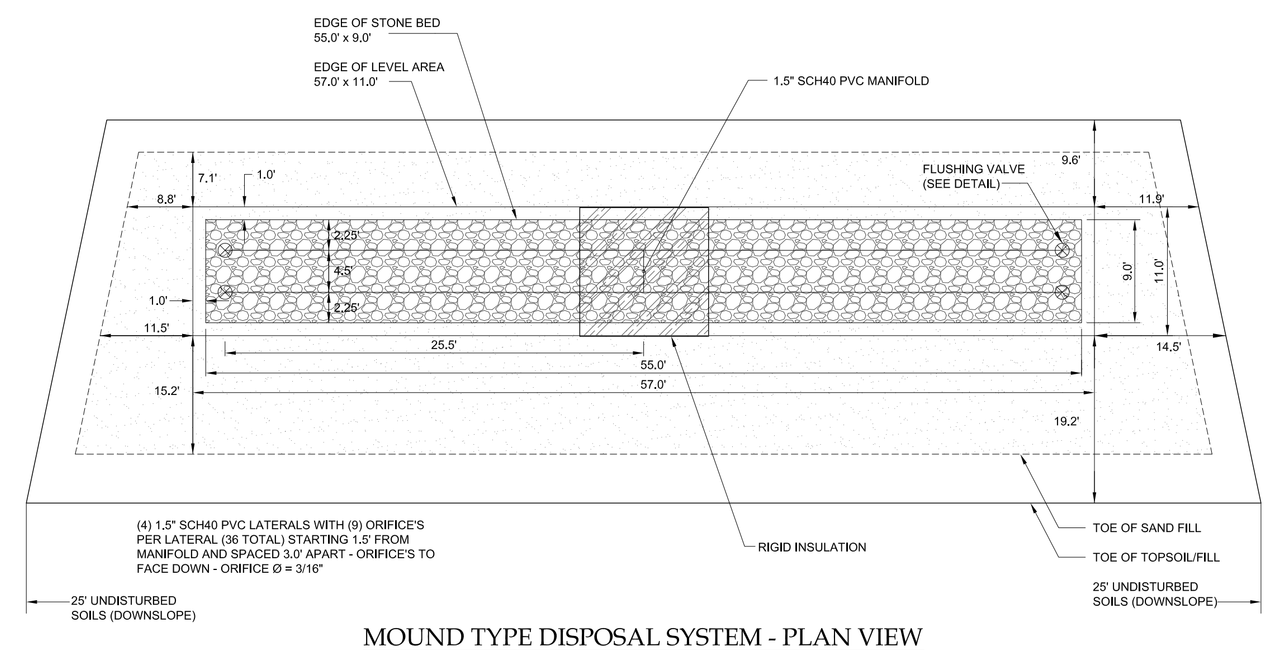

MOUND TYPE DISPOSAL SYSTEM - PLAN VIEW

NOT TO SCALE

NOT TO SCALE

THE CONTRACTOR SHALL NOTIFY "DIGSAFE" AT 1-888-DIG-SAFE PRIOR TO ANY EXCAVATION.

"I hereby certify that in the exercise of my reasonable professional judgment the design-related information submitted with this application is true and correct, and that the design included in this application for a permit complies with the Vermont Wastewater System and Potable Water Supply Rules and the Vermont Water Supply Rules."

7-31-18
Stephen Revell, CPG — Date
Licensed Class B Designer #178

INSTITUTE OF PROFESSIONAL GEOLOGISTS — CERTIFICATE NUMBER 6259 AIPG — STEPHEN REVELL — CERTIFIED PROFESSIONAL GEOLOGIST

LINCOLN APPLIED GEOLOGY, INC.
ENVIRONMENTAL CONSULTANTS
163 Revell Drive, Lincoln, Vermont 05443
(802) 453-4384 (802) 453-6399 (fax)
Web : www.lagvt.com E-Mail: lagvt@lagvt.com

Mansfield, et al Property
To be Conveyed to L. Selina Peyser
Mount Philo Road
Charlotte, Vermont

Lot A Proposed
Wastewater System Design Details

LAG PROJECT #	17041
DATE:	July 31, 2018
SURVEYORS:	TAM/SK
DRAWN BY:	TAM
FIGURE #:	4