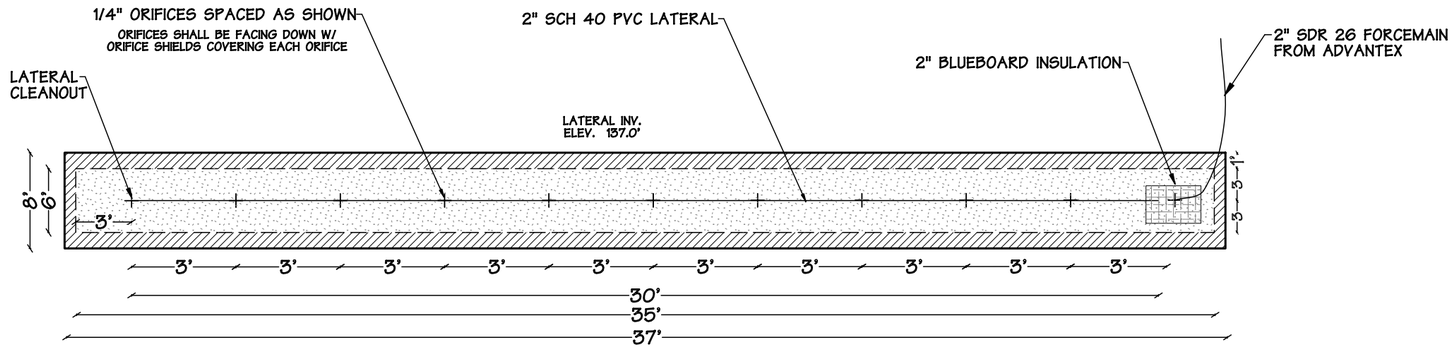

MOUND LATERAL SPACING

N.T.S.

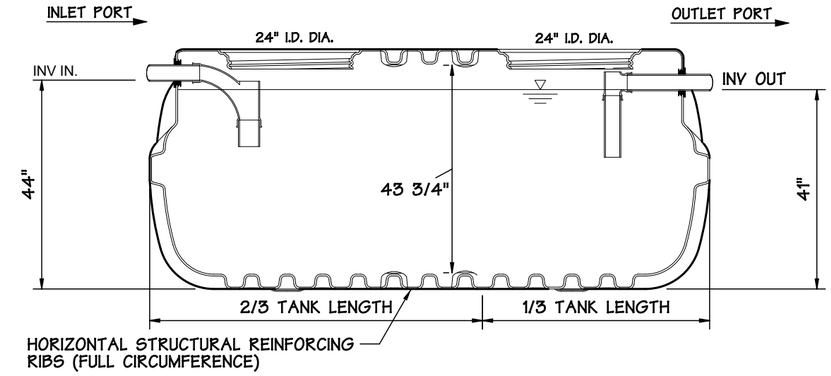

1000 GAL. ROTH PVC SEPTIC TANK W/ FILTER (Typical)

N.T.S.

LATERAL CLEANOUT DETAIL

N.T.S.

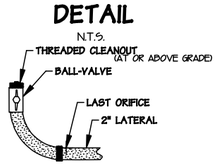

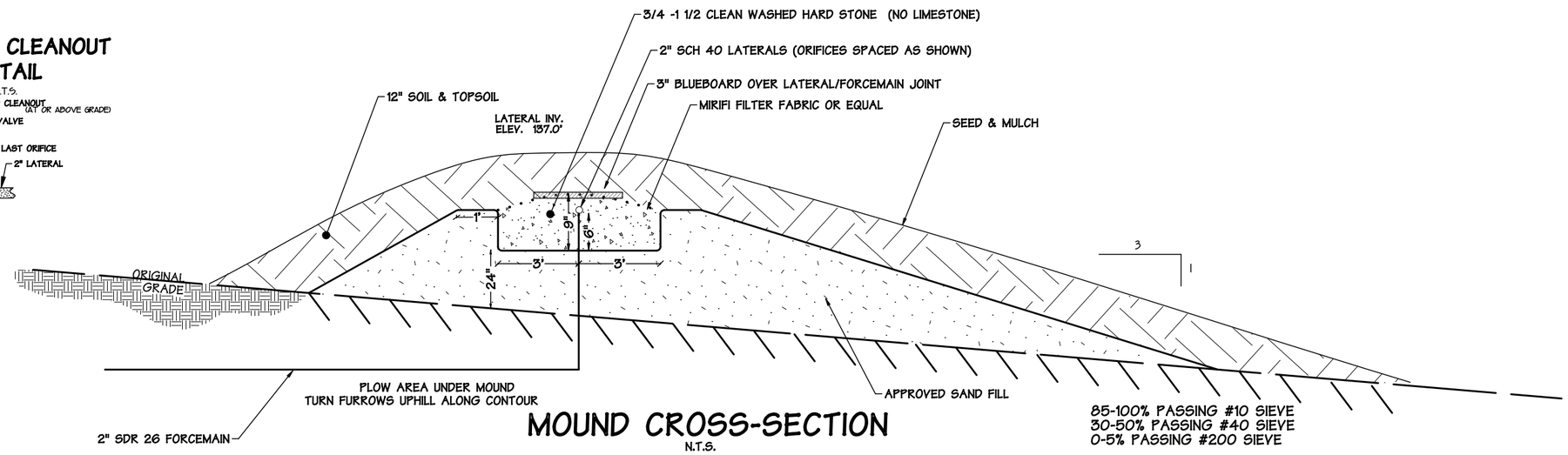

85-100% PASSING #10 SIEVE
30-50% PASSING #40 SIEVE
0-5% PASSING #200 SIEVE

MOUND CROSS-SECTION

N.T.S.

MOUND CONSTRUCTION

**** SAND FILL MUST BE APPROVED IN SAND PIT BEFORE PLACEMENT ON SITE. Sieve analysis of sand may require two weeks for results to be returned from lab. At least half of the sand must be stockpiled on the site before the mound is plowed.

The following is a step-by-step procedure for mound construction. Any variations from these steps should be discussed with the Technician BEFORE any mound, house or driveway construction starts. Proper mound construction procedures are very important. Mound failure may result from improper mound construction techniques and procedures. Proper equipment is essential. Small track type dozers work best. Wheel type tractors may compact the subsoil.

**** Construction on wet soil causes soil smearing and compaction and possible future failure. Construction should only take place from June to September and during dry weather. ****

1. **** INSPECTION POINT ****

Stake out the mound with the Technician before any mound, house or driveway construction starts. CALL THE DESIGN CONSULTANT AT LEAST 48 HOURS BEFORE YOU ARE READY TO STAKE OUT THE MOUND. ROPE OFF AREA DOWNSLOPE OF MOUND SITE TO PREVENT ALL TRAFFIC.

2. Prepare entire area to be covered by mound fill. Cut trees to ground level. Do not remove stumps. Mow vegetation. Rake away all cut vegetation and leaves. SITE MUST BE DRY BEFORE PLOWING.

3. DIG TRENCH and lay delivery pipe if it is to be buried BELOW grade UNDER the mound. Leave pipe end capped and excavate it after plowing.

4. **** INSPECTION POINT ****

INSPECTION OF PLOWED AREA BEFORE FILL IS PLACED. CALL THE DESIGN CONSULTANT AT LEAST 48 HOURS BEFORE PLOWING, SO INSPECTION CAN OCCUR WHILE THE SITE IS BEING PLOWED. CALL: Vermont Contours Inc. 453-2351 FOR INSPECTION. Plow entire area to be covered by mound fill. Plow along the contour of the slope with a mold board plow to a depth of 8", throwing the soil upslope. Placement of the fill on plowed area immediately after plowing is required. Don't let plowed area be rained on. Keep all traffic off plowed area and off downslope side of plowed area. This is the most important step of the construction process. Plowing creates a good interface between the sand fill and the natural soil. EXTEND the buried delivery pipe above grade.

5. Place approved sand fill around the uphill and side edges of the plowed area. Keep wheels of trucks off plowed areas. NO traffic on the downslope side of plowed areas. Work from the ends and upslope side only.

6. Move the sand fill into place using a small track-type dozer. Always keep at least 8 inches of sand beneath tracks to prevent compaction of the plowed natural soil. Place the sand fill to the required depth, which is the same elevation as the top elevation of stone in the bed or trenches. Shape sides to the desired slope: 1 on 4

7. With the dozer blade or backhoe, form the trenches in the sand fill to a depth of 12". Hand level the bottom of the bed or trenches to make sure they are all level and at equal elevation along the entire length.

8. Place clean washed, graded or crushed stone (sized 3/4" or 1 1/2")in trenches to a depth of 12". Form 3" deep channels in the stone in which to lay the piping network. DO NOT USE LIMESTONE

9. Lay pipes level in channels and connect manifold pipe to the force main. DO NOT SOLVENT CEMENT. Place perforations UPWARD for pressure testing. Pipe from pumping chamber to manifold should slope so that after each dose it drains back into pumping chamber or to the manifold. Pumping chamber should not be located in the downhill toe area of the mound.

PUMPING CHAMBER MUST BE FILLED WITH CLEAN WATER AND ALL ELECTRICAL CONNECTIONS MUST BE MADE. SYSTEM IS TO BE CLEAN WATER PRESSURE TESTED TO SHOW THAT DIFFERENCES IN FLOW THROUGH PERFORATIONS IN LATERALS ARE LESS THAN 15%. CALL THE DESIGN CONSULTANT AT LEAST 48 HOURS BEFORE TESTING TIME TO SCHEDULE INSPECTION.

10. WIPE DRY ALL piping connections and TURN laterals so that holes face DOWNWARD. Solvent cement all piping in place securely. (PLACE ORIFICE SHIELD NOW)

11. Place 1-2" stone over lateral pipes. Place one layer of synthetic filter fabric (such as, mirafi, or equivalent) over ALL of the stone.

12. Place 9" of subsoil or topsoil (soil less permeable than sand fill) over all sand fill (increase to depth of 15" over top center of mound). Place 3" of good quality top soil over entire mound surface. This will raise the elevation at the center of the top of the mound to 18" over the elevation of the sand fill and 12" over the rest of sand fill in mound. This soil may be taken from elsewhere on the site, but NOT from within 50' down hill of the mound or from the replacement area.

13. **** INSPECTION POINT ****

To inspect proper depth of cover, call the Design Consultant at least 24 HOURS in advance of this point. Call: .

14. SEED AND MULCH ENTIRE MOUND SURFACE IMMEDIATELY TO PREVENT EROSION. SHRUBS CAN BE PLANTED AROUND EDGES OF MOUND.

Good planning is essential for efficient construction. The testing of sand fill, delivery of materials, inspection points, and actual construction must all be carefully planned. All technical questions should be clarified with the Design Consultant BEFORE construction starts.

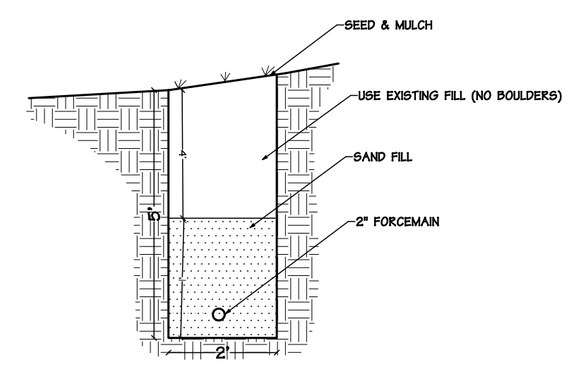

FORCEMAIN DETAIL

N.T.S.

BLUEBOARD INSULATION SHALL BE USED WHEN LEDGE PREVENTS FULL BURY DEPTH*

No.	DATE	DESCRIPTION	BY

STATE OF VERMONT — SPENCER K. HARRIS NO. 310-B — LICENSED DESIGNER

DATE

MELBY

172 JOLLY CLUB RD
CHARLOTTE, VERMONT

DETAILS

VERMONT CONTOURS INC.

SEPTIC SYSTEM DESIGNS
TOPOGRAPHIC SITE PLANS & MAPPING
G.P.S. MAPPING
P.O. BOX 384
BRISTOL, VERMONT 05443
453-2351

Drawn: SKH
Date: 10/12/18
Scale: AS SHOWN
Project: MELBY
Sheet: 2 OF 3