LINCOLN
APPLIED GEOLOGY, INC.
ENVIRONMENTAL CONSULTANTS

1984 - 2018
34
YEARS OF
EXCELLENCE
LINCOLN APPLIED
GEOLOGY, INC

August 24, 2018

Aaron Brown, Sewage Control Officer
Town of Charlotte
P.O. Box 119
Charlotte, Vermont 05445

RE: Numondo America, LP, Ethan Allen Highway, Charlotte, VT- Submittal of WW Application for Replacement Disposal System

Dear Aaron:

The disposal system for Numondo America, LP is in a state of failure and must be replaced. A "best-fix" mound disposal area was identified north of the existing 8 bedroom duplex residence. Although being dominantly compliant, there is some mixed fill in the northern part of the area. The sandy loam texture and distinct blocky structure of it makes it useful for a "best-fix" replacement disposal area. There is no change to the water system so the requested permit does not relate to this.

In this regard, please find a submittal related to permitting the replacement disposal system for the 8 bedroom two unit duplex residence. The application, fee and all the attachments are being submitted hard copy. We are also submitting electronically and by CD.

We look forward to approval to abate the surfacing disposal system, with a very reasonably complying mound disposal area.

Very Truly Yours,
Lincoln Applied Geology, Inc

Stephen Revell, CPG
Licensed Designer #178BW
Senior Hydrogeologist

Encl.

CC: Numondo America, LP

NUMONDO AMERICA LP
GARRETT ADKINS
5507A ETHAN ALLEN HWY
CHARLOTTE, VT 05445

366
58-3/116
100

8/21/2018
Date

Pay to the Order of Town of Charlotte $ 250.00

two hundred fifty 00/100 Dollars

Photo Safe Deposit® Details on back

TD Bank
America's Most Convenient Bank®

For Septic

⑆011600033⑆ 5241899014⑈ 0366

VERMONT Secretary of State CORPORATIONS DIVISION

Back

Business Information

Business Details

Business Name: NUMONDO AMERICA, L.P.

Business ID: 0040310

File #: A0000819

Business Type: Domestic Limited Partnership

Business Status: Active

Date of Incorporation / Registration Date: 10/09/2009

Business Description: Not Available

Principal Office Business Address: 209 BATTERY STREET, BURLINGTON, VT, 05401, USA

Principal Office Mailing Address: 209 BATTERY STREET, BURLINGTON, VT, 05401, USA

Citizenship / Domestic Jurisdiction: Domestic/VT

Principals Information

Name/Title:	Physical Address:
COPPOLASAVERIO/Principal	209 BATTERY STREET, BURLINGTON, VT, 05401, USA

Registered Agent Information

Name: DINSE, KNAPP & MCANDREW, P.C.

Physical Address: 209 BATTERY STREET, BURLINGTON, VT, 05401, USA

Mailing Address: 209 BATTERY STREET, BURLINGTON, VT, 05401, USA

Agent Type: Registered Entity

Trade Name Information

Trade Name	Business ID	Business Status
MT. PHILO FARM & VINEYARD	0326810	Active

Back Filing History Name History Return to Search

Drinking Water & Groundwater Protection Division - Permit Application

Wastewater System & Potable Water Supply

VERMONT
DEPARTMENT OF ENVIRONMENTAL CONSERVATION

For Office Use Only:

Application#	PIN#	Date Complete Application Received

General Information:

IMPORTANT: This application form **IS NOT** intended to be printed and filled out by hand. Because of the dynamic nature of the form, it is required that the information be typed directly into the fields using a computer.

In most cases a licensed designer will be required for your project and to help complete this application form. There are also line-by-line instructions available to assist with completing this form: http://dec.vermont.gov/sites/dec/files/dwgwp/wastewater/pdf/WWAppInstructionsRules.pdf.

NOTE: We strongly suggest referring to the application instructions while completing this application form.

A. Prior Permits

1 Please enter any prior or related WW permit or Act 250 permit number(s) (if applicable)

B. Project Name

1 Please enter a name that can be used as a reference for the project

Numondo America L.P. Replacement System

C. Landowner Information

Landowner Name

1 Legal Entity/Organization Name (if the Landowner is a legal entity or organization rather than a person)

Numondo America L.P.

2 Landowner First Name (and Middle Initial if appropriate)	3 Landowner Last Name
Saverio	Coppola

Landowner Contact Information

4 Mailing Address Line 1	5 Mailing Address Line 2
5507 Ethan Allen Highway	

6 City	7 State/Province	8 Country	9 Zip/Postal Code
Charlotte	VT	United States	05445

10 Email Address	11 Telephone
scoppola@gascon.ca	514-713-3110

Landowner Certifying Official Information (if applicable)

12 First Name (and MI if appropriate)	13 Last Name
Saverio	Coppola

14 Title	15 Email Address	16 Telephone
Principal	scoppola@gascon.ca	514-713-3110

Add Another Landowner

D. Primary Contact Information (if other than Landowner)

1 First Name (and Middle Initial if appropriate)	2 Last Name

3 Company/Organization Name

4 Mailing Address Line 1	5 Mailing Address Line 2

6 City	7 State/Province	8 Country	9 Zip/Postal Code
		United States	

10 Email Address	11 Telephone

E. Lot(s) Affected by this Project

1 Please list any and all proposed lots or existing parcels that are directly affected by this project. If this application is an amendment to a previous project, please use consistent lot numbers.

(a) Existing or Proposed Lot	(b) Lot Number	(c) SPAN	(d) Parcel ID	(e) Acres
Existing	1	138-043-11761	00100-5507	59.1

(f) Book Number (ref. 1)	(g) Page Number(s) (ref. 1)	(h) Book Number (ref. 2)	(i) Page Number(s) (ref. 2)	(j) Book Number (ref. 3)	(k) Page Number(s) (ref. 3)
183	23-26				

(l) Comments

Add Another Lot

F. Project Information

1 Project Description

Replace a failed in-ground system with a 10'x105' Mound Disposal System

2 Total Acreage of Property	3 Town (primary)	4 Town (secondary - if located in more than one town)
59.1	Charlotte	

5 Street Address (911 address if available, otherwise a brief description of the location)

5507 Ethan Allen Highway, Charlotte, Vermont

6 Center of property GPS coordinates - Enter the approximate center of the project coordinates using GPS set for NAD83 or as derived from a map (map must be based on NAD83).

(a) Latitude *(in decimal degrees to five decimal places, ex. 44.38181°)*	(b) Longitude *(in decimal degrees to five decimal places, ex. -72.31392°)*
44.27893	-73.23472

7 If someone from the Drinking Water & Groundwater Protection Division's Regional Office has been to the property for a site visit, please indicate who visited the property and the date of the visit.

(a) Name of Staff Person	(b) Date of Visit (m/d/yyyy)

G. Application Fee

Please refer to the Application Fee Schedule prior to selecting the Application Fee Code for your project below.

1 Select Application Fee Code	2 Fee Amount Due
(RO1) 560 gpd or less	$306.25

H. Wastewater System and Water Supply Component Details

Component Information:

PLEASE READ: The purpose of this section is to provide supplementary information for system components when there are proposed changes to existing conditions or previous permits. In the case that the application includes site plans, the component names on this worksheet must match those on the site plans. If there is a prior permit, the component names must be labeled consistent with plans from the prior permit(s). It is ***required*** that, at a minimum, the following component types must be included for each application: final disposal; pre-treatment (if applicable); building unit(s); water treatment (if applicable); and water source. To add components after the third entry, click the green button labeled "Add Another Component". You may also insert components between components you've already added by clicking the "Insert Component Between" button. For large projects with many components, you may consider using the "Show/Hide Component Set Separator" button to separate sets (or groups) of connected components by naming each set. For additional instructions, please review the appendix to the application instructions: **http://dec.vermont.gov/sites/dec/files/dwgwp/wastewater/pdf/WWAppInstructionsRules.pdf**.

Component 1 Information

Show/Hide Component Set Separator | Remove This Component

Component Group Type: (WW) Final Disposal

Component Type: Mound

--Component 1 Details--

Component Name	Example - Lot 1 Mound...		
Lot # Physical Location	Lot 1	Change Type	Replacement of Failed System
WW Design Flow	1,050	Changes	
I/A Dispersal Type			
Variance Requested	☐	Comments	
Design Approach (select all that apply, press Ctrl and Click to select multiple)	Alternative Toilets Constructed Wetlands Existing - Unknown Filtrate Flow equalization No discharge (other than holding tank) Performance based Prescriptive Store and dose Subsurface drip distribution Time dosing Wastewater strength		
Manufacturer			
Model Name			
Model Number			
As-Built Latitude			
As-Built Longitude			

Insert Component Between

Component 2 Information

Show/Hide Component Set Separator | Remove This Component

Component Group Type	(WW) Conveyance	Component Type	STEP

--Component 2 Details--

Component Name	Proposed 1,500 Gallon Pump Station		
Lot # Physical Location	1	Change Type	Replacement of Failed System
Municipal WW System		Changes	
		Comments	

Insert Component Between

Component 3 Information

Show/Hide Component Set Separator | Remove This Component

Component Group Type	(WW) Tanks	Component Type	Septic Tank

--Component 3 Details--

Component Name	Proposed 1,500 Gallon Septic Tank		
Lot # Physical Location	1	Change Type	Replacement of Failed System
		Changes	
		Comments	

Insert Component Between

Component 4 Information

Show/Hide Component Set Separator | Remove This Component

Component Group Type	Building	Component Type	Building-Unit

--Component 4 Details--

Component Name	Existing Duplex - 2 Units, 2 Kitchens, 1 serving a 2 Bedroom and 1 serving a 4 bedroom & a 2 bedroom		
Lot # Physical Location	1	Change Type	No Change
WW Permitted Flow	1,050	Changes	
WS Permitted Flow	1,050		
Flow Basis	Rule	Comments	

Insert Component Between

Component 5 Information

Show/Hide Component Set Separator | Remove This Component

Component Group Type	(WS) Source	Component Type	Potable

--Component 5 Details--

Component Name	Drilled Bedrock Well		
Lot # Physical Location	1	Change Type	No Change
Source Type	Drilled/Driven Well	Changes	
WS Design Flow	1,050		
Allocation Approval	☐	Comments	
Construction Approval	☐		
Variance Requested	☐		
As-Built Latitude			
As-Built Longitude			

Insert Component Between

Add Another Component

I. Project Plan Reference

1 Please provide the following information for all water supply and wastewater system plans being submitted.

(a) Sheet#	(b) Title	(c) Plan Date	(d) Last Revision Date	
1	Site Plan Showing Proposed Replacement Wastewater Disposal System	8/15/2018		X
2	Replacement Wastewater Design Details	8/15/2018		X

Add Another Plan Reference

J. Project Scoping Questions

1	Does this project involve the replacement of a failed wastewater system?	◉ Yes	○ No
2	Does this project involve the replacement of a failed water supply?	○ Yes	◉ No
3	Does this project involve construction within the buffer for a Class 2 Wetland?	○ Yes	◉ No
4	Does this project involve construction within a river corridor?	○ Yes	◉ No
5	Is the property within 250 feet of the mean water level of lakes greater than 10 acres in size?	○ Yes	◉ No
6	Will the project require a public water supply permit?	○ Yes	◉ No
7	Is any portion of the proposed wastewater system located in a Water Source Protection Area (SPA) as designated by the Drinking Water & Groundwater Protection Division?	○ Yes	◉ No
8	Does this project require an Underground Injection Control Permit?	○ Yes	◉ No

9 Is this project located in a Class A Watershed?	○ Yes ◉ No
10 If this project is in a Class A Watershed, does the design flow for the project exceed 1,000 gpd or is the project located on the same lot as other buildings, structures, or campgrounds where the total design flow for the lot is greater than 1,000 gpd?	○ Yes ○ No ◉ NA
11 Are any of the proposed water sources located within 1 mile of a hazardous waste site as designated by the Waste Management & Prevention Division and identified on the Agency mapping website (if Yes, please submit additional information on the site)?	○ Yes ◉ No

K. Consultant/Designer Certification

Consultant/Designer Certification & Copyright License

"I hereby certify that in the exercise of my reasonable professional judgment, the design-related information submitted with this application is true and correct, and that the design included in this application for a permit complies with the Vermont Wastewater System and Potable Water Supply Rules and the Vermont Water Supply Rules.

As the individual who prepared this application, including all documents that are marked as copyrighted, I hereby grant a non-exclusive, limited license to the State to allow the documents to be made available for public review and copying in order to properly implement and operate the permitting programs for Wastewater Systems and Potable Water Supplies, and for no other purposes. As a condition to this license, the State agrees that it will not make any changes to such documents, nor will the State delete any copyright notices on such documents."

Consultant/Designer Role	Print Consultant/Designer Name	Consultant/Designer Signature	Signature Date
WW Designer	Stephen Revell		8/23/18

Add Second Consultant/Designer

L. Signatures & Acknowledgements of Landowner(s)

This application must be signed by each Landowner listed on the property deed or by individuals with legal authority to sign on behalf of each Landowner. In order to insure compliance with the requirements of the regulations administered by the Department of Environmental Conservation, Drinking Water and Groundwater Protection Division, it may be necessary to visit the property. As this would involve a Department employee entering private property, we request your approval to do so.

If we do visit your property, do you have any special instructions?

"By signing this application, I certify that I am a landowner listed on the property deed or that I have the legal authority to sign on behalf of the landowner. I understand that by signing this application I am granting permission for the Department employees to enter the property, during normal business hours, to insure compliance of the property with the applicable rules of the Department.

I also understand that I am not allowed to commence any site work or construction on this project without written approval from the Department of Environmental Conservation.

If my project utilizes an Innovative/Alternative System or Product, I have received a copy of the Drinking Water & Groundwater Protection Division's approval letter and agree to abide by the conditions of the approval.

I also certify that to the best of my knowledge and belief the information submitted above is true, accurate and complete."

Print Landowner Name	Landowner Signature	Signature Date
Saverio Coppola for Numondo America LP		2018-08-20

Add Landowner Signature Block

Department of Environmental Conservation
Wastewater System & Potable Water Supply Permit Application

ANR Form 5: Certification Statement for Wastewater System & Potable Water Supply Permits when there is no Required Notification of Overshadowed Property Owner(s)

A person submitting an application to the Secretary for a Wastewater System and Potable Water Supply Permit shall use this statement whenever overshadowing notification of affected landowners is not required (see guidance and instructions for examples).

Note: When the property subject to the permit application is owned by more than one person, only one of the landowners must sign this certification statement even though all landowners must sign the permit application itself.

Landowner Certification

I hereby certify that "overshadowing" notification is not required either because there is an exemption to the notification requirement or there are no landowners whose property may be affected by the proposed water and wastewater systems.

Landowner Signature	Print Landowner Name	Certification Date
	Saverio Coppola for NuMondo America	2018-08-20

5507 Ethan Allen Highway (US 7), Charlotte, Vermont
Property Address or Property Tax ID#

Numondo America, LP
Supplemental Information
Replacement Disposal System

1. Project Description

Numondo America, LP grows lavender and grapes, as well as processing lavender at 5507 Ethan Allen Highway. The 8 bedroom duplex which serves the property has a failed in-ground disposal area that needs replacement. The water system has not failed, is adequate and does not need replacement.

2. Wastewater Flows

The farmhouse is a duplex because it has 2 kitchens. One kitchen goes with a 2 bedroom unit with flows of 280 gpd. One kitchen essentially goes with 2 apartments, a 4 bedroom with flows of 490 gpd and a 2 bedroom with flows of 280 gpd. The total flows of the farmhouse are very conservatively calculated at 1050 gpd which becomes the basis of design of the wastewater disposal system.

3. Site and Soil Conditions

An acceptable replacement area was found north of the house and the active lavender beds that is shown on the Figure 1 Site Plan. It's on a sloping area (7%) generally underlain by sandy loam texture soils with no groundwater impacts to a depth of 32". Although some of the upper profile is a very old mixed fill, its sandy loam texture and strong blocky structure allow it to be used in a "best fix" design. The soil profile descriptions are attached along with the soil percolation data. The percolation data indicate the soils are quite permeable with rates ranging from 20-30 minutes per inch. The overall soil profile is suitable for a performance based mound type disposal area because the flows exceed 1000 gpd. It is noted that because of a proposed curb cut and driveway to the north, the mound had to be shifted to the south. Additional hand augers were placed as shown to confirm that soil conditions have not changed.

4. Design and Effluent Mounding Analysis

Based on a flow of 1050 gpd, a 10'x105' performance based mound is proposed. The attached site specific mounding analysis for a flow of 1050 gpd indicates the mound requires 1.28' of mound sand beneath the application area. A reduced hydraulic conductivity of 20 feet/day was used to compensate for the mixed sandy loam fill. The pressure distribution and mound dimension details are attached which describe the distribution system which requires an effluent pump that is capable of providing 48.18 gpm vs 22.3 of total dynamic head. A pump meeting that specification is attached. The replacement system details are attached as Figure 2. The mound will be furnished effluent from a new 1500 gallon septic tank and a 1500 gallon pump station. The 1500 gallon septic tank is a variance component because the 1050

gpd flows call for a 1575 gallon tank. This is acceptable because the 1050 gpd flows have been very conservatively calculated, the tank being replaced is 1000 gallons, an effluent filter is being used, and a 1500 gallon pump station with a bit of excess capacity is being used.

5. Isolation Distances

There are no isolation distances that need to be compromised.

6. Water Source and System

Since this project involves no increase in flow, no changes are required to the water source and system.

F:\CLIENTS\2018\18061\Supplemental Info.docx

Soil Profile Descriptions
Numondo America, LP
August 3, 2018
BY Stephen Revell CPG LD #178BW and Senior Hydrogeologist
Inspected by Brian Trembeck, Septic Consultant
Note: Hand augers placed on August 21, 2018

Test Pit 1 (TP-1)

0-22" Brown fine to very fine sandy loam fill; moderate to strong blocky structure; loose at top becoming friable with depth; well drained; no concern about fill because of its good texture and well defined structure

22-48" Brown to red-brown fine to medium sandy loam; friable; moderate to strong granular structure; well drained to 38"; redoximorphic features 38-48"; no water or rock to depth

Test Pit 2 (TP-2)

0-14" Brown fine to very fine sandy loam fill; moderate to strong blocky structure; loose at top becoming friable with depth; well drained; no concern about fill because of its good texture and well defined structure

14-22" Darker brown stony fine sandy loam; loose to friable; moderate granular to crumb structure; well drained

22-48" Brown to red-brown fine to medium sandy loam; friable; moderate to strong granular structure; well drained to 38"; no redoximorphic features, water, or rock to depth

Test Pit 3 (TP-3)

0-15" Brown stony fine sandy loam; loose to friable; moderate granular structure, well drained

15-32" Brown to red-brown fine to medium sandy loam; friable; moderate to strong granular to fine blocky structure; well drained

32-42" Brown to red-brown fine to medium sandy loam; friable; moderate to strong granular structure; redoximorphic features; no water or rock to depth

Test Pit 4 (TP-4)

0-15" Dark brown slightly stony fine sandy loam with minor sandy loam fill; friable; moderate fine blocky structure, well drained

15-38" Brown to red brown medium sandy loam to loamy medium sand; friable; moderate fine blocky structure; redoximorphic features 36-38"

38-48” Brown-gray clay loam to clay; firm; coarse blocky to massive structure; redoximorphic features; no water or rock to depth

Hand Auger #1 (HA-#1)

0-14” Dark brown slightly stony fine sandy loam with minor sandy loam fill; friable; moderate fine blocky structure, well drained

14-36” Brown to red brown medium sandy loam to loamy medium sand; friable; moderate fine blocky structure; redoximorphic features at 35”

36-40” Brown-gray clay loam to clay; firm; coarse blocky to massive structure; redoximorphic features; no water or rock to depth

Hand Auger #2 (HA-#2)

0-15” Dark brown slightly stony fine sandy loam with minor sandy loam fill; friable; moderate fine blocky structure, well drained

15-38” Brown to red brown medium sandy loam to loamy medium sand; friable; moderate fine blocky structure; redoximorphic features at 36”

+38” Brown-gray clay loam to clay; firm; coarse blocky to massive structure; redoximorphic features; no water or rock to depth

Hand Auger #3 (HA-#3)

0-14” Dark brown slightly stony fine sandy loam with minor sandy loam fill; friable; moderate fine blocky structure, well drained

14-35” Brown to red brown medium sandy loam to loamy medium sand; friable; moderate fine blocky structure; redoximorphic features at 34”

35-37” Brown-gray clay loam to clay; firm; coarse blocky to massive structure; redoximorphic features; no water or rock to depth

F:\CLIENTS\2018\18061\Soil Profile Descriptions.docx

Numondo America L.P. Property
5507 Ethan Allen Highway (US-7)
Charlotte, Vermont
Percolation Test Results
All tests were performed on August 8, 2018 at a depth of 12-24"

PT-1	Drop Time (min)	Total Drop Time (min)	Total Drop (inches)	Drop Rate (min/inch)
	9.5	9.5	1	9.5
	12.8	22.3	2	11.1
	15.6	37.8	3	12.6
	17.4	55.2	4	13.8
	18.7	73.9	5	14.8
	19.8	93.7	6	15.6
	20.7	114.4	7	16.3
	---	**1440.0**	---	**28.7**

PT-2	Drop Time (min)	Total Drop Time (min)	Total Drop (inches)	Drop Rate (min/inch)
	8.6	8.6	1	8.6
	11.9	20.5	2	10.3
	13.7	34.2	3	11.4
	14.9	49.1	4	12.3
	15.7	64.8	5	13.0
	16.4	81.2	6	13.5
	17.0	98.2	7	14.0
	---	**1440.0**	---	**22.8**

*NOTE:
Drop time includes fill time for each of the seven runs.

Table 1

Site Specific Effluent Mounding Analysis
Numondo America, LP Property
5507 Ethan Allen Highway, Charlotte

In order to support the proposed performance based mound-type disposal system design and show that the soils can accommodate the design flow rate associated with a year-round eight-bedroom residence, a site specific hydrogeologic analysis using Darcy's Law was conducted. The following formula was used to determine the ability of the soil to accept the proposed amount of wastewater and determine its impact on the shallow seasonal ground water system.

Using the equation:

$Q = k \cdot i \cdot h \cdot l$ Where: Q= Volume= 1050 gallons/ day = 140.37 ft^3/ day;
k= Hydraulic Conductivity = 20 ft./ day (approved k value for fine sandy loam with weak to blocky structure);
i= Gradient = 8% = 0.08 ft./ ft.;
h= effluent mound height in feet;
l= 105' mound length.

When solving this equation for h, an effluent mound of 0.84' was calculated. Since evidence of a seasonal high ground water system was identified at 32" or 2.67' with an induced mound of 0.84', 1.83' of unsaturated soil will remain. To maintain the required 3' separation to the induced mound, 3' – 1.83' or 1.17' of state approved mound sand is required beneath the application area.

F:\CLIENTS\2018\18061\Site Specific Effluent Mounding Analysis.docx

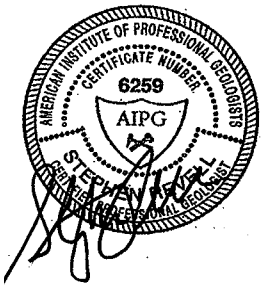

PRESSURE DISTRIBUTION & MOUND DIMENSION DETAILS

CLIENT'S NAME: Numondo
DATE: 8/20/2018 PERFORMED BY: T. Maynard LAG Project #: 18061

Design Flow Rate	1050	GPD
Width of Distribution Stone Bed/Trench	10	FEET
Length of Distribution Stone Bed/Trench	105	FEET
Thickness of Sand Beneath Distribution Stone Bed/Trench	1.17	FEET
Thickness of Stone Beneath Laterals	6	INCHES
Soil Cover Thickness at Edge of Level Area	12	INCHES
Front Slope of Finished Mound	33	PERCENT
Side and Rear Slope of Finished Mound	33	PERCENT
Percolation Rate	25	MPI
Natural Ground Slope	8	PERCENT
Thickness of Sand on Upper Side of Level Area	1.84	FEET
Thickness of Sand on Lower Side of Level Area	2.80	FEET
Width of Level Area	12	FEET
Length of Level Area	107	FEET
Area of Distribution Stone Bed/Trench	1050	SQUARE FT
Volume of Stone Required	24	CUBIC YARDS
Proposed Basal Area	2541	SQUARE FEET
Volume of Mound Sand Required	291.4	CUBIC YARDS
Number of Laterals .	4	
Length of Each Lateral	50	FEET
Number of Orifices in the Manifold	0	
Number of Orifices in Each Lateral	13	
Distance Between Manifold and First Orifice	2	FEET
Distance Between Orifices (on center)	4	FEET
Distribution Area per Orifice	20.19	SQ. FT.
Design Pressure Head	5	FEET
Diameter of Orifices (enter as fraction)	0.188	INCHES
Elevation From Pump Intake to Laterals (0 if siphon)	5	FEET
Diameter of Force Main	2	INCHES
Length of Force Main	295	FEET
Length of Manifold to Lateral	1.5	FEET
Diameter of Manifold Pipe	2	INCH
Diameter of Lateral Pipe	2	INCH
Friction Loss in Force Main	13.98	FEET
Friction Loss in Manifold	0.02	FEET
Friction Loss in Section 1	0.01	FEET
Friction Loss in Entire Lateral	0.05	FEET
Discharge Rate at First Orifice	0.93	GPM
Discharge Rate at Last Orifice	0.92	GPM
Percent Difference in Flow Rate First to Last Orifice	0.46	PERCENT
Total Dynamic Head Loss	24.199	FEET
Total Distribution System Flow .	48.18	GPM
Volume of Distribution System	32.64	GALLONS
Pump Capacity 48.18 GPM vs	24.199	FEET OF HEAD
Volume per Dose	170	GALLONS
On/Off Float Swing (1,500 gal. Tank)	5.0	INCHES

PRESSURE DISTRIBUTION & MOUND DIMENSION DETAILS

CLIENT'S NAME: Numondo
DATE: 8/20/2018 PERFORMED BY: T. Maynard LAG Project #: 18061

DIMENSIONS OF MOUND SYSTEM

Dimensions of Mound Sand

4.5 feet from level area to uphill sand toe

6.3 ft corner of level area to upper toe corner

12 ft wide level area

5.6 ft to side toe from upper edge of level area

10 ft wide stone bed/trench
105 ft long stone bed/trench

8.5 ft to side toe from lower edge of level area

107 ft long level area

15.8 ft corner of level area to lower toe corner

11.2 feet from level area to downhill sand toe

Dimensions of Final Cover

6.9 feet from level area to uphill toe

9.8 ft corner of level area to upper fill toe

8.6 ft to side toe from upper edge of level area

12 ft wide level area

107 ft long level area

11.5 ft to side toe from lower edge of level area

21.5 ft corner of level area to lower fill toe

15.2 feet from level area to downhill toe

PLOW AREA LAYOUT MEASUREMENTS

Center of Bed/Trench to Downslope Toe	71.9	feet
End of Level Area @ Midpoint to Downslope Toe	26.1	feet
Center of Bed/Trench to Upslope Toe	61.8	feet
End of Level Area @ Midpoint to Upslope Toe	14.7	feet

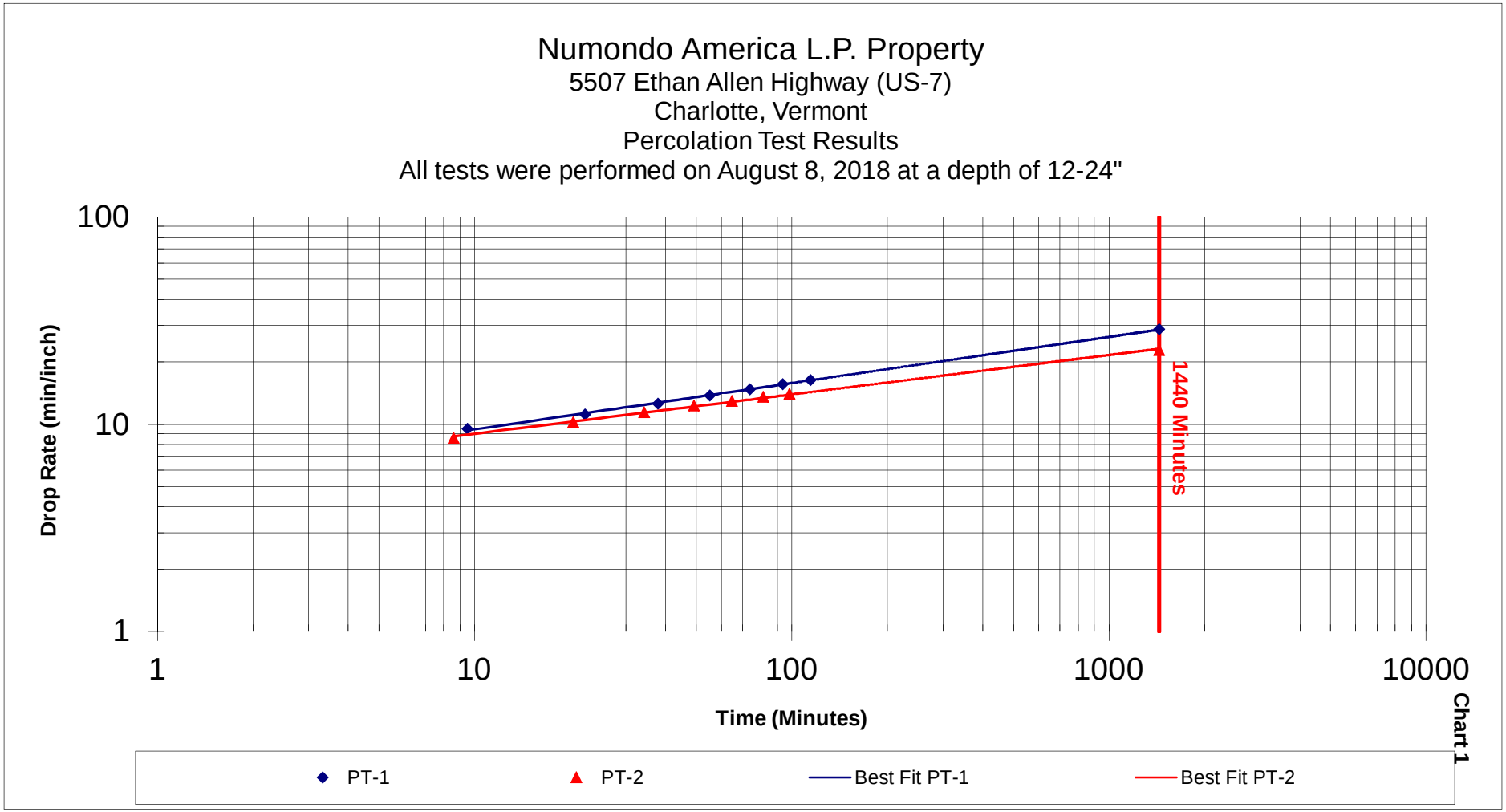
Numondo America L.P. Property
5507 Ethan Allen Highway (US-7)
Charlotte, Vermont
Percolation Test Results
All tests were performed on August 8, 2018 at a depth of 12-24"
100
10
1
Drop Rate (min/inch)
1
10
100
1000
10000
Time (Minutes)
1440 Minutes
Chart 1
PT-1
PT-2
Best Fit PT-1
Best Fit PT-2

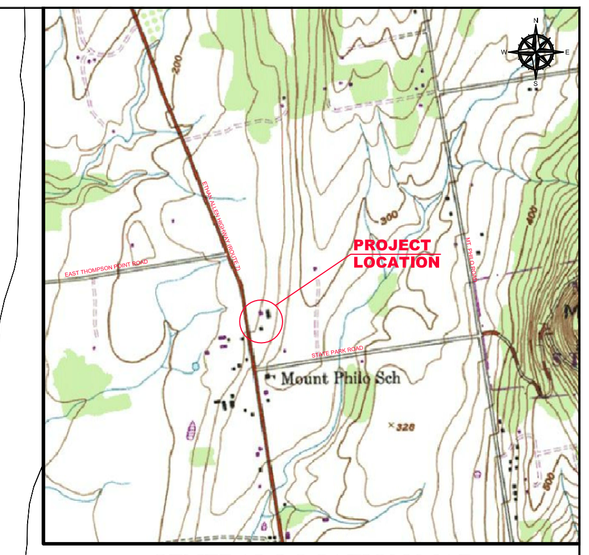

GENERAL LOCATION MAP

SCALE: 1"=2,000'±

LEGEND

100	EXISTING GROUND CONTOUR
WL	EXISTING WATER LINE
SL	EXISTING SANITARY SEWER
SL	PROPOSED SANITARY SEWER
	EDGE OF PAVEMENT
	EDGE OF GRAVEL DRIVE
	WELL ISOLATION ZONE
	SEPTIC ISOLATION ZONE
	EXISTING PROPERTY LINE
	DECIDUOUS TREE
	TEMPORARY BENCHMARK
W	WELL - DRILLED
TP-1/P-1	TEST PIT/PERCOLATION TEST

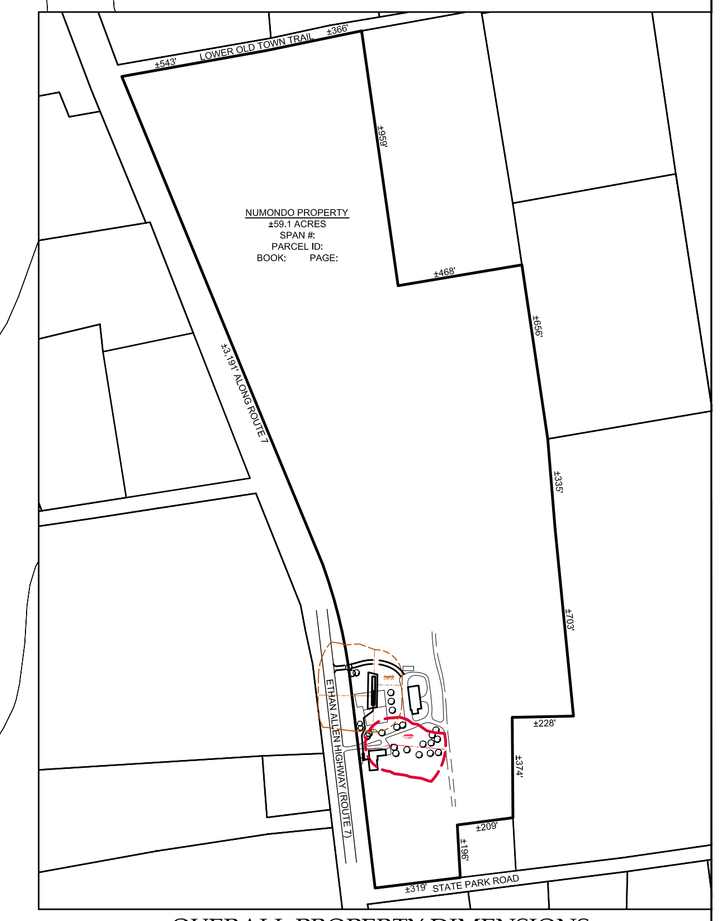

OVERALL PROPERTY DIMENSIONS

SCALE: 1"=400'

GRAPHIC SCALE
(IN FEET)
30 0 15 30 60 120
(1"=30')

THE CONTRACTOR SHALL NOTIFY "DIGSAFE" AT 1-888-DIG-SAFE PRIOR TO ANY EXCAVATION.

"I hereby certify that the design related information submitted with this application is true and correct, and that, in the exercise of my reasonable professional judgment, the "best-fix"design included in this application for a permit reasonably complies with the Vermont Wastewater System and Potable Water Supply Rules and the Vermont Water Supply Rules."

Aug.15, 2018
Steve Revell, CPG — Date
Licensed Class B Designer #178

AMERICAN INSTITUTE OF PROFESSIONAL GEOLOGISTS — CERTIFICATE NUMBER 6259 — AIPG — STEPHEN REVELL — CERTIFIED PROFESSIONAL GEOLOGIST

LINCOLN APPLIED GEOLOGY, INC.
ENVIRONMENTAL CONSULTANTS
163 Revell Drive, Lincoln, Vermont 05443
(802) 453-4384 (802) 453-5399 (fax)
Web : www.lagvt.com E-Mail: lagvt@lagvt.com

Numondo America, L.P. Property

5507 Ethan Allen Highway (Route 7)
Charlotte, Vermont

Site Plan showing Proposed Replacement Wastewater Disposal System

LAG PROJECT #	18061
DATE:	Aug. 15, 2018
SURVEYORS:	TAM
DRAWN BY:	TAM
FIGURE:	1

CONSTRUCTION SPECIFICATIONS - MOUND

1. MOUND CONSTRUCTION PROCEDURES ARE JUST AS IMPORTANT AS THE MOUND DESIGN. GOOD DESIGN WITH POOR CONSTRUCTION WILL RESULT IN THE MOUND OPERATING POORLY AND MAY RESULT IN FAILURE. PROPER EQUIPMENT IS ESSENTIAL. SMALL TRACK TYPE EXCAVATORS WORK BEST. WHEEL TYPE TRACTORS ARE TOO DIFFICULT TO MANEUVER IN THE FILL. THE FOLLOWING IS A STEP-BY-STEP PROCEDURE FOR MOUND CONSTRUCTION, WHICH HAS BEEN TRIED AND PROVEN. OTHER TECHNIQUES COULD BE USED AS LONG AS THE BASIC PRINCIPLES OF MOUND DESIGN, OPERATION, AND CONSTRUCTION ARE NOT VIOLATED.

2. SUBMIT A REPRESENTATIVE SAMPLE (ENOUGH TO FILL A 5 GALLON BUCKET) OF MOUND SAND FROM THE INTENDED SOURCE FOR TESTING ACCORDING TO ASTM D 422 (KNIGHT CONSULTING ENGINEERS, PHELPS ENGINEERING, OTTER CREEK ENGINEERING, AND VERMONT TESTING CAN ALL PERFORM THIS TEST). SUBMIT A COPY OF THE RESULTS TO THE DESIGNER PRIOR TO INITIATING CONSTRUCTION.

3. STAKE OUT THE MOUND ON THIS SITE SO THAT THE TRENCHES OR BED RUN PERPENDICULAR TO THE DIRECTION OF THE SLOPE. REFERENCE STAKES ARE RECOMMENDED IN CASE CORNER STAKES ARE DISTURBED. LINCOLN APPLIED GEOLOGY, INC., MUST STAKEOUT OR VERIFY THIS TASK.

4. STAKE OUT CORNERS OF THE BED AND DETERMINE THE BOTTOM ELEVATION OF THE BED.

5. DETERMINE WHERE THE FORCE MAIN FROM THE PUMP CHAMBER CONNECTS TO THE DISTRIBUTION SYSTEM IN THE MOUND.

6. TRENCH AND LAY THE FORCE MAIN FROM THE PUMP CHAMBER TO THE MOUND. LAY THE PIPE 5' BELOW THE GROUND SURFACE FOR FROST PROTECTION. WHERE THERE IS LESS THAN 5' OF COVER, INSULATE WITH 2" OF RIGID POLYSTYRENE INSULATION 4' WIDE (2' EITHER SIDE OF PIPE, PLACED IN TWO 1" LAYERS WITH STAGGERED JOINTS). CUT AND CAP THE PIPE 1' BENEATH THE GROUND SURFACE. BACKFILL AND COMPACT SOIL AROUND PIPE TO PREVENT BACK SEEPAGE OF EFFLUENT ALONG PIPE. THIS STEP MUST BE DONE BEFORE PLOWING TO AVOID COMPACTING AND DISTURBANCE OF SURFACE.

7. INSTALL THE CURTAIN DRAIN (IF SHOWN ON PLANS).

8. CHECK THE MOISTURE CONTENT OF THE SOIL AT 7 - 8" DEEP. IF IT IS TOO WET, SMEARING AND COMPACTION WILL RESULT, THUS REDUCING THE INFILTRATION CAPACITY OF THE SOIL. SOIL MOISTURE CAN BE DETERMINED BY ROLLING A SOIL SAMPLE BETWEEN THE HANDS. IF IT ROLLS INTO A RIBBON, THE SITE IS TOO WET TO PREPARE. IF IT CRUMBLES, SOIL PREPARATION CAN PROCEED.

9. CUT TREES TO GROUND LEVEL. REMOVE EXCESS VEGETATION BY MOWING. DO NOT REMOVE STUMPS. PREPARE THE SITE BY USING A MOLDBOARD PLOW TO CREATE 8 - 10" DEEP FURROWS PERPENDICULAR TO THE SLOPE. FURROWS MUST BE THROWN UP HILL. CHISEL PLOWING MAY BE USED IF A MOLDBOARD PLOW IS NOT AVAILABLE. ROTOTILLING MUST NOT BE DONE ON HEAVY SOILS BUT CAN BE USED ON NON-STRUCTURAL SOIL SUCH AS SANDS. ALTERNATIVELY, PLOWING CAN BE DONE BY USING AN EXCAVATOR BUCKET TO PULL THE SOIL INTO FURROWS PARALLEL WITH THE GROUND CONTOURS (THE RESULTING SURFACE MUST LOOK AS THOUGH IT HAD BEEN PLOWED WITH A MOLDBOARD PLOW, AS OUTLINED ABOVE). IMMEDIATE CONSTRUCTION AFTER PLOWING IS NECESSARY. AVOID RUTTING OF PLOWED AREA WITH VEHICULAR TRAFFIC. DESIGNER INSPECTION REQUIRED AT THIS POINT.

10. EXTEND THE EFFLUENT PIPE TO SEVERAL FEET ABOVE THE GROUND SURFACE.

11. PLACE THE APPROVED FILL MATERIAL AROUND THE EDGE OF THE PLOWED AREA. KEEP WHEELS OF TRUCK OFF PLOWED AREAS. MINIMIZE TRAFFIC ON THE DOWNSLOPE SIDE OF THE MOUND. WORK FROM THE END AND UPSLOPE SIDE.

12. MOVE THE FILL MATERIAL INTO PLACE USING A SMALL TRACK TYPE TRACTOR WITH A BLADE. ALWAYS KEEP A MINIMUM OF 6 INCHES OF SAND BENEATH TRACKS TO PREVENT COMPACTION OF THE NATURAL SOIL.

13. PLACE THE FILL MATERIAL TO THE REQUIRED DEPTH, WHICH IS THE TOP OF THE TRENCHES OR BED. SHAPE SIDES TO THE DESIRED SLOPE. INSPECTION REQUIRED AT THIS POINT.

14. WITH THE BLADE OF THE TRACTOR FORM THE BED OR TRENCHES. HAND LEVEL THE BOTTOM OF THE BED. MAKE SURE BOTTOM IS AT THE SAME ELEVATION AND LEVEL.

15. PLACE THE COARSE AGGREGATE IN THE TRENCHES OR BED. IT SHOULD BE ¾ TO 1½", WASHED, DURABLE AGGREGATE (I.E. NOT LIMESTONE OR MARBLE). LEVEL AGGREGATE TO THE DESIGN DEPTH.

16. PLACE THE DISTRIBUTION SYSTEM ON THE AGGREGATE. CONNECT THE MANIFOLD TO THE FORCE MAIN FROM THE PUMP CHAMBER OR SIPHON CHAMBER. SLOPE MANIFOLD SLIGHTLY TOWARD DISTRIBUTION LATERALS. LAY LATERALS LEVEL, REMOVING RISES AND DIPS. PLACE ORIFICES UPWARDS. INSPECTION REQUIRED AT THIS POINT (TO OBSERVE DISCHARGE RATE AND PRESSURE TESTING).

17. PLACE SHIELDS ON ORIFICES AND PROPERLY CEMENT ALL COMPONENTS. PLACE 2" OF AGGREGATE OVER THE DISTRIBUTION PIPE.

18. PLACE A SYNTHETIC NON-WOVEN FILTER FABRIC (MIRAFI 140N OR EQUIVALENT) OVER THE ENTIRE STONE BED. OVERLAP JOINTS BY 12" MINIMUM. PLACE AN 8' X 8' MAT OF RIGID POLYSTYRENE INSULATION, 2" THICK, CENTERED OVER FORCE MAIN RISER. PLACE INSULATION IN TWO LAYERS (1" EACH) AND STAGGER THE JOINT PATTERN.

19. PLACE SOIL ON TOP OF THE BED OR TRENCH TO A DEPTH OF 1' IN CENTER AND 6" AT OUTER EDGE OF BED OR TRENCHES. THIS MAY BE A SUBSOIL OR TOPSOIL.

20. PLACE 6" OF GOOD QUALITY TOPSOIL OVER THE ENTIRE MOUND SURFACE. THIS WILL RAISE THE ELEVATION AT THE CENTER OF THE MOUND TO A MINIMUM OF 1.5' AND THE OUTSIDE EDGES OF BED OR TRENCHES 1'. INSPECTION REQUIRED AT THIS POINT.

21. LANDSCAPE THE MOUND BY PLANTING GRASS, USING THE BEST VEGETATION ADAPTABLE TO THE AREA. A MIXTURE OF 90% BIRDSFOOT TREEFOIL AND 10% TIMOTHY MAY BE DESIRABLE IF THE MOUND IS NOT MANICURED. IF MANICURING IS DESIRED, A COMBINATION OF 60% BLUEGRASS, 30% CREEPING RED FESCUE AND 10% ANNUAL RYE GRASS MAY BE THE DESIRED VEGETATIVE COVER. SHRUBS CAN BE PLANTED AROUND THE BASE AND UP THE SIDESLOPES. THEY SHOULD BE SOMEWHAT MOISTURE TOLERANT SINCE THE TOE OF THE MOUND MAY BE SOMEWHAT MOIST DURING VARIOUS TIMES OF THE YEAR. KEEP ALL TREES AND SHRUBS AWAY FROM THE TOP OF THE MOUND, AS ROOT SYSTEMS CAN DESTROY THE DISTRIBUTION NETWORK.

22. MOUND MAINTENANCE INVOLVES PUMPING THE SEPTIC TANK AND PUMP CHAMBER EVERY 1 TO 3 YEARS TO AVOID CARRYOVER OF SOLIDS INTO THE MOUND. A GOOD WATER CONSERVATION PLAN WITHIN THE HOUSE ASSURES THAT THE MOUND WILL NOT BE OVERLOADED. AVOID EXCESS TRAFFIC ON THE MOUND AREA. WINTER TRAFFIC ON MOUND SHOULD BE AVOIDED TO MINIMIZE FROST PENETRATION. INSPECT PUMP CHAMBER AND SEPTIC TANK EACH YEAR TO DETERMINE THE LEVEL OF SLUDGE ACCUMULATION. MOW TWICE A YEAR.

23. UTILITIES INFORMATION SHOWN ON THIS PLAN WAS OBTAINED FROM AVAILABLE SOURCES AND MAY OR MAY NOT BE EITHER ACCURATE OR COMPLETE. THE CONTRACTORS SHALL VERIFY EXACT LOCATION OF EXISTING UTILITIES AND SHALL BE RESPONSIBLE FOR ANY DAMAGE TO ANY UTILITY, PUBLIC OR PRIVATE, SHOWN OR NOT SHOWN ON THIS PLAN.

24. ALL FILL AROUND THE STRUCTURES SHALL BE PLACED IN 12" LIFTS AND THOROUGHLY COMPACTED TO 95% OF MAXIMUM DENSITY AT OPTIMUM MOISTURE CONTENT.

25. THIS DESIGN MUST BE INSPECTED BY LINCOLN APPLIED GEOLOGY, INC., LINCOLN, VERMONT, TO ENSURE COMPLIANCE WITH THESE PLANS. LINCOLN APPLIED GEOLOGY, INC., WAIVES ANY AND ALL RESPONSIBILITY AND LIABILITY FOR PROBLEMS THAT ARISE FROM FAILURE TO FOLLOW SPECIFICATIONS, AND THE DESIGN INTENT THAT THE PLANS CONVEY, AND FROM FAILURE TO HAVE BEEN NOTIFIED BY THE CONTRACTOR FOR INSPECTIONS.

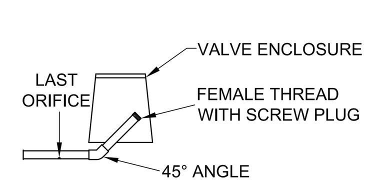

FLUSHING VALVE DETAIL

NOT TO SCALE

SEPTIC TANK
OPERATION & MAINTENANCE RECOMMENDATIONS

1. THE SEPTIC TANK'S PURPOSE IS TO SETTLE OUT SOLIDS, CONTAIN THE SCUM AND PASS TREATED EFFLUENT. BACTERIA WITHIN THE SEPTIC TANK HELPS DECOMPOSE THE SOLIDS. SHOULD ANY SOLIDS PASS THROUGH THE SEPTIC TANK INTO THE SYSTEM, PREMATURE CLOGGING OF THE PIPING, STONE OR NATIVE SOIL BENEATH THE SYSTEM IS LIKELY TO OCCUR. ONLY HUMAN WASTES SHOULD ENTER THE SEWAGE SYSTEM, WATER USE SHOULD BE CONSERVATIVE AND CLEANING AGENTS CANNOT ENTER THE SYSTEM, AS THEY KILL BACTERIA.

2. THE STATE FLOW FIGURES OF 140 GAL/DAY/BEDROOM ARE BASED ON SHORT TERM PEAK USE PERIODS (I.E., DAILY EVENTS). ACTUAL FLOWS SHOULD AVERAGE 75-100 GALLONS PER DAY, PER BEDROOMS.

3. ONCE PER YEAR, THE DEPTH OF SCUM AND SLUDGE IN THE SEPTIC TANK SHOULD BE MEASURED AND THE TANK SHALL BE PUMPED IF:

A. THE SLUDGE LEVEL IS WITHIN 12 INCHES OF THE BOTTOM OF THE OUTLET.

B. THE SCUM LAYER IS WITHIN 3 INCHES OF THE TOP OF THE OUTLET.

C. IF A OR B IS ANTICIPATED TO OCCUR PRIOR TO THE NEXT INSPECTION.

D. IN ANY CASE, THE TANK SHALL BE PUMPED AT A MAXIMUM 5 YEAR INTERVAL.

4. ONCE A YEAR, THE DISTRIBUTION BOX AND/OR PUMP STATION SHOULD BE INSPECTED AND ANY SETTLED SOLIDS REMOVED.

5. THE EFFLUENT FILTER SHOULD BE INSPECTED AND CLEANED ANNUALLY.

6. ABOVE ITEMS 1-5 ARE INTENDED TO PROLONG THE LIFE OF THE SYSTEM, NOT GUARANTEE IT.

SEWAGE DESIGN INFORMATION

1. THE SEWAGE DISPOSAL SYSTEM SHALL BE CONSTRUCTED IN ACCORDANCE WITH APPLICABLE TOWN REGULATIONS AND THE VERMONT ENVIRONMENTAL PROTECTION RULES.

2. THE FOLLOWING MINIMUM ISOLATION DISTANCES SHALL BE MAINTAINED FROM THE DISPOSAL AREA TO:

PROPERTY LINE	25 FEET
BUILDING (WITH FOOTING DRAIN) UPSLOPE OR SIDESLOPE	35 FEET
BUILDING (WITH FOOTING DRAIN) DOWNSLOPE	75 FEET
DRIVEWAYS & PARKING LOTS	10 FEET
TREES	10 FEET

3. BASIS OF DESIGN:

NO. OF BEDROOMS	8
DESIGN FLOW	1050
PERCOLATION RATE	<60 MIN/INCH
LOADING RATE, Q (TRENCHES)	1.0 GAL/SF/DAY - 6" OF STONE

4. SEPTIC TANK

A. A 1,000 GALLON PRECAST CONCRETE SEPTIC TANK, CAMP PRECAST OR APPROVED EQUAL SHALL BE USED, WITH THREE ACCESS COVERS; 4,000 PSI CONCRETE; WATERPROOF JOINTS AND SET ON THOROUGHLY COMPACTED SUBBASE. THE OUTLET BAFFLE SHALL HAVE AN EFFLUENT FILTER & A TWO (2) FOOT DIAMETER RISER TO GRADE WITH STEEL COVER.

B. THE USE OF GARBAGE DISPOSALS IS NOT RECOMMENDED.

5. MISC.:

A. IF A WATER TREATMENT SYSTEM IS GOING TO BE USED, THE BACKWASH WATER MAY NOT BE DISCHARGED INTO THE DISPOSAL SYSTEM.

STATE OF VERMONT MOUND SAND SPECIFICATIONS

Fill Material: The fill material from the natural soil plowed surface to the top of the trench or bed shall be sand texture with one of the following sieve analyses:

1.

Sieve Number	Opening (mm)	Percent Passing, by Weight
3/8	9.500	85 - 100
40	0.420	25 - 75
60	0.240	0 - 30
100	0.149	0 - 10
200	0.074	0 - 5

2.

Sieve Number	Opening (mm)	Percent Passing, by Weight
4	4.750	95 - 100
8	2.380	80 - 100
16	1.190	50 - 85
30	0.590	25 - 60
50	0.297	10 - 30
100	0.149	2 - 10

3.

Sieve Number	Opening (mm)	Percent Passing, by Weight
3/8	9.500	85 - 100
40	0.420	30 - 50
200	0.074	0 - 10

The material must meet specifications 1, 2, or 3. Interpolation of analyses is not permitted. Fill material 2 is ASTM Specification C-33 and is intended for manufactured material.

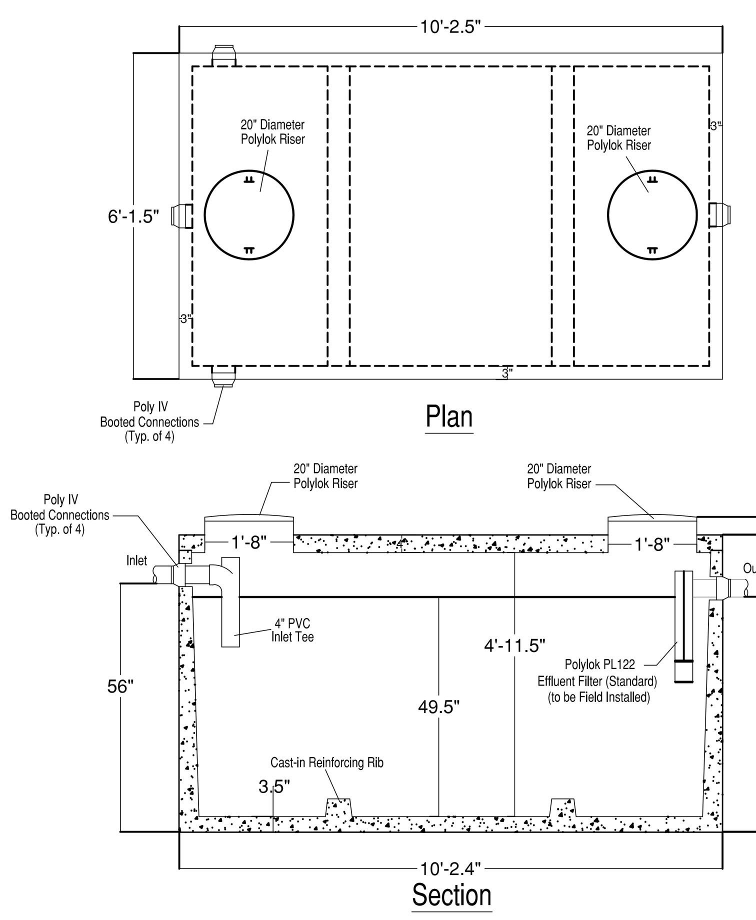

1500 GALLON WATERPROOF PRECAST SEPTIC TANK

NOT TO SCALE

SPECIFICATIONS:
- Concrete Minimum Strength 5000psi @ 28 days
- Steel Reinforcement Grade 60
- Effluent Filter to be Field Installed by Contractor
- Top Seam Construction
- Water Tight to Top of Concrete
- Booted Pipe Connections
- Superior Performence Orenco Effluent Filters Available
- Effluent Filter Alarm Available
- Weights Subject to Variation

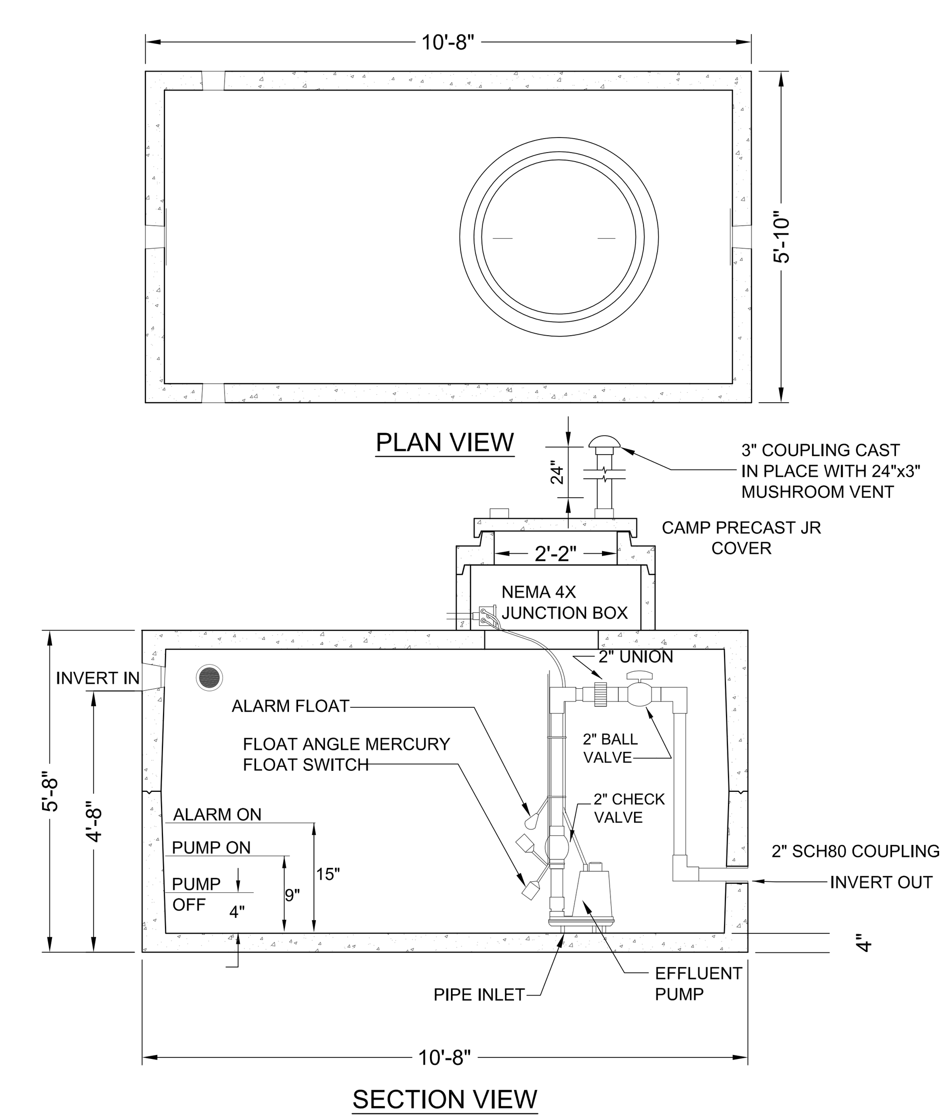

1500 GALLON PRECAST CONCRETE PUMP STATION

NOT TO SCALE

DESIGN NOTES:
1. 5000 PSI CONCRETE, 28 DAY STRENGTH.
2. LOW PRESSURE SEALS DESIGNED TO ACCEPT 4" C.I. OR PVC PIPE.
3. REQUIRES EFFLUENT PUMP CAPABLE OF PUMPING A MINIMUM OF 48.18GPM VERSUS 22.30' TDH, AND A SUPER SINGLE PUMP SWITCH WITH A 5.0" SWING SETTING (+/-170 GALLONS) SET 6" ABOVE THE BASE OF THE PUMP WITH HIGH LEVEL ALARM SET 6" ABOVE THE PUMP ON SETTING.
4. IT SHOULD BE NOTED THAT ANY DEVIATION IN THE LOCATION OR ELEVATION OF THE SEPTIC TANK, PUMP STATION, OR THE DISPOSAL SYSTEM FROM THE DESIGNED LOCATION MAY REQUIRE A DIFFERENT SIZE PUMP.
5. ALL ELECTRICAL WIRING MUST BE DONE BY A LICENSED ELECTRICIAN.
6. PROPER FLOAT TREE ASSEMBLY IS REQUIRED AS SPECIFIED IN DETAIL.

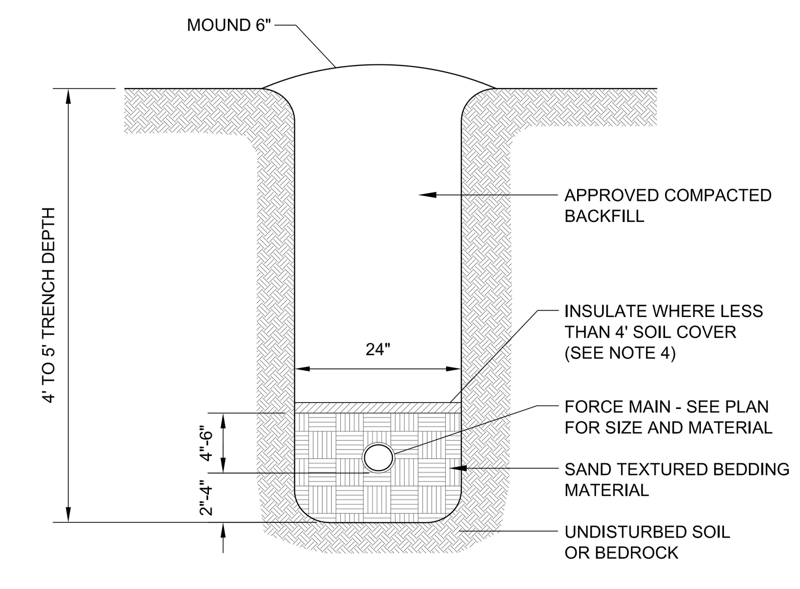

FORCE MAIN TRENCH NOTES:

1. BACKFILL AND BEDDING SHALL BE PROPERLY COMPACTED.
2. BEDDING MATERIAL SHALL NORMALLY CONSIST OF WELL-GRADED SANDS AND GRAVELS WITH A MAXIMUM SIZE OF 3/4".
3. BACKFILL SHALL NOT CONTAIN:
   - -ANY STONES MORE THAN 12" (1 1/2" MAXIMUM DIAMETER WITHIN 2' OF THE OUTSIDE OF THE PIPE) IN THE LARGEST DIMENSION.
   - -BE GREATER THAN 50 POUNDS.
   - -CONTAIN ANY FROZEN, WET OR ORGANIC MATERIAL.
4. USE RIGID INSULATION AT THE RATE OF 1" FOR EVERY FOOT LESS THAN 4'.
5. FORCE MAIN MUST BE TESTED FOR LEAKAGE.
6. AT ANY CROSSING UNDER A ROAD OR DRIVE, FORCE MAIN IS TO BE ENCASED IN A 4" PVC SLEEVE, SAID SLEEVE IS TO EXTEND 8' IN EITHER DIRECTION FROM EDGE OF TRAVELED WAY.
7. THE SIDES OF THE TRENCHES 4' OR MORE IN DEPTH ENTERED BY PERSONNEL SHALL BE SHEETED OR SLOPED TO THE ANGLE OF REPOSE AS DEFINED BY O.S.H.A. STANDARDS.

FORCE MAIN TRENCH DETAIL

NOT TO SCALE

ITEM	LEACHFIELD	SEPTIC TANK	SEWER
DRILLED WELL	(b)	50	50
GRAVEL PACK WELL, SHALLOW WELL OR SPRING	(b)	75	75
LAKES, PONDS AND IMPOUNDMENT'S	50	25	25
RIVER, STREAM	50	25	10
DRAINAGE SWALES, ROADWAY DITCHES	25	--	--
MAIN OR MUNICIPAL WATER LINES	50	50	(d)
SEWER SERVICE LINES	25	25	(d)
ROADWAYS, DRIVEWAYS, PARKING LOTS	10	5	(c)
TOP OF EMBANKMENT, OR SLOPE > 30%	25	10	--
PROPERTY LINE	25^1	10	10
TREES	10	10	10
OTHER DISPOSAL FIELD OR REPLACEMENT AREA	10^2	--	--
FOUNDATION, FOOTING DRAINS, CURTAIN DRAINS	35^3	10	--
PUBLIC COMMUNITY WATER SUPPLY (e)	(f)	(f)	(f)
SUCTION WATER LINE	100	50	50

THESE DISTANCES MAY BE REDUCED WHEN EVIDENT THAT THE DISTANCE IN UNNECESSARY TO PROTECT AN ITEM OR INCREASED IF NECESSARY TO PROVIDE ADEQUATE PROTECTION.

(a) ISOLATION DISTANCES APPLY REGARDLESS OF PROPERTY LINE AND OWNERSHIP.
(b) SEPARATION BETWEEN POTABLE WATER SUPPLIES AND LEACHFIELD'S SHALL BE DETERMINED BY METHODS IN THE VERMONT WATER AND SUPPLY RULE, APPENDIX 21-A, PART 11, 11.4.
(c) SEWERS UNDER ROADS, DRIVEWAYS OR PARKING LOTS MAY REQUIRE PROTECTIVE CONDUITS OR SLEEVES.
(d) SEPARATION OF PRESSURE WATER LINES CONSIDERED AS "SERVICE CONNECTIONS" AND SEWER LINES SHALL ADHERE TO THE VERMONT PLUMBING RULES. SEPARATION OF PRESSURE WATER LINES (CONSIDERED TO BE PART OF A PUBLIC WATER SYSTEM AS DEFINED BY THE VERMONT WATER SUPPLY RULE) AND SEWER LINES SHALL ADHERE TO THE REQUIREMENTS OF THE VERMONT WATER SUPPLY RULE.
(e) THIS REFERS TO PUBLIC COMMUNITY WATER SYSTEMS, AS DEFINED IN THE VERMONT WATER SUPPLY RULE.
(f) CONTACT DEPARTMENT OF ENVIRONMENTAL CONSERVATION'S WATER SUPPLY DIVISION, 103 SOUTH MAIN STREET, WATERBURY, VERMONT FOR ISOLATION DISTANCES RELATIVE TO PUBLIC COMMUNITY WATER SUPPLY.

WASTEWATER SYSTEM ISOLATION DISTANCES

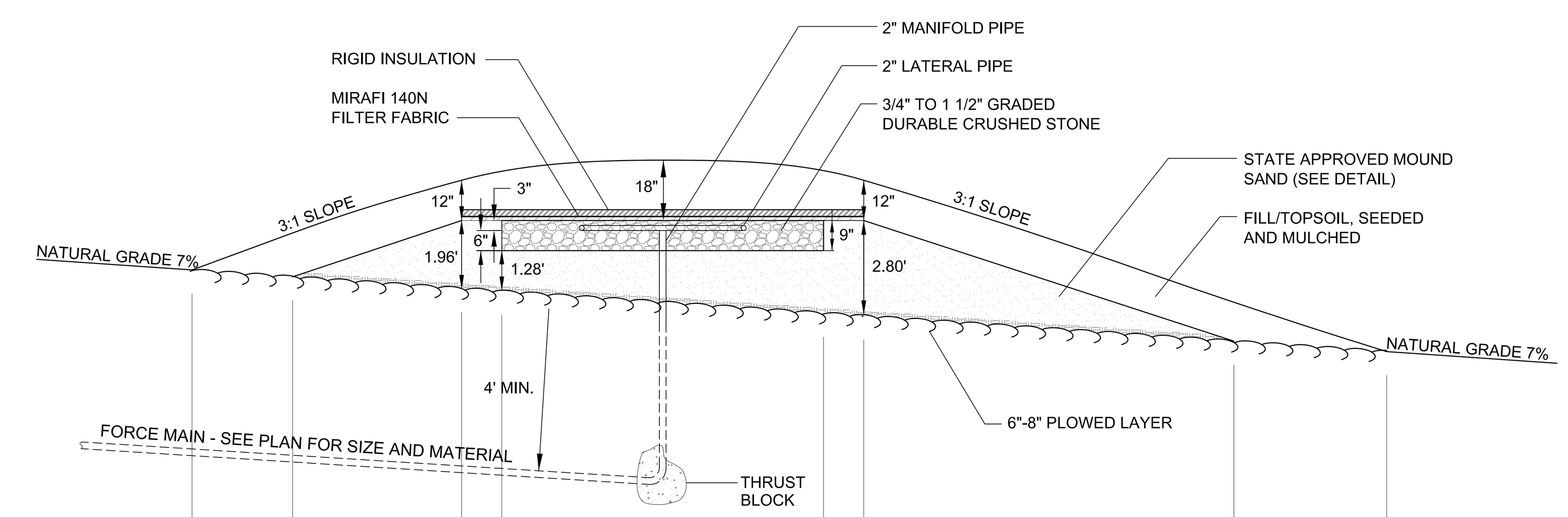

MOUND TYPE DISPOSAL SYSTEM - SECTION VIEW

NOT TO SCALE

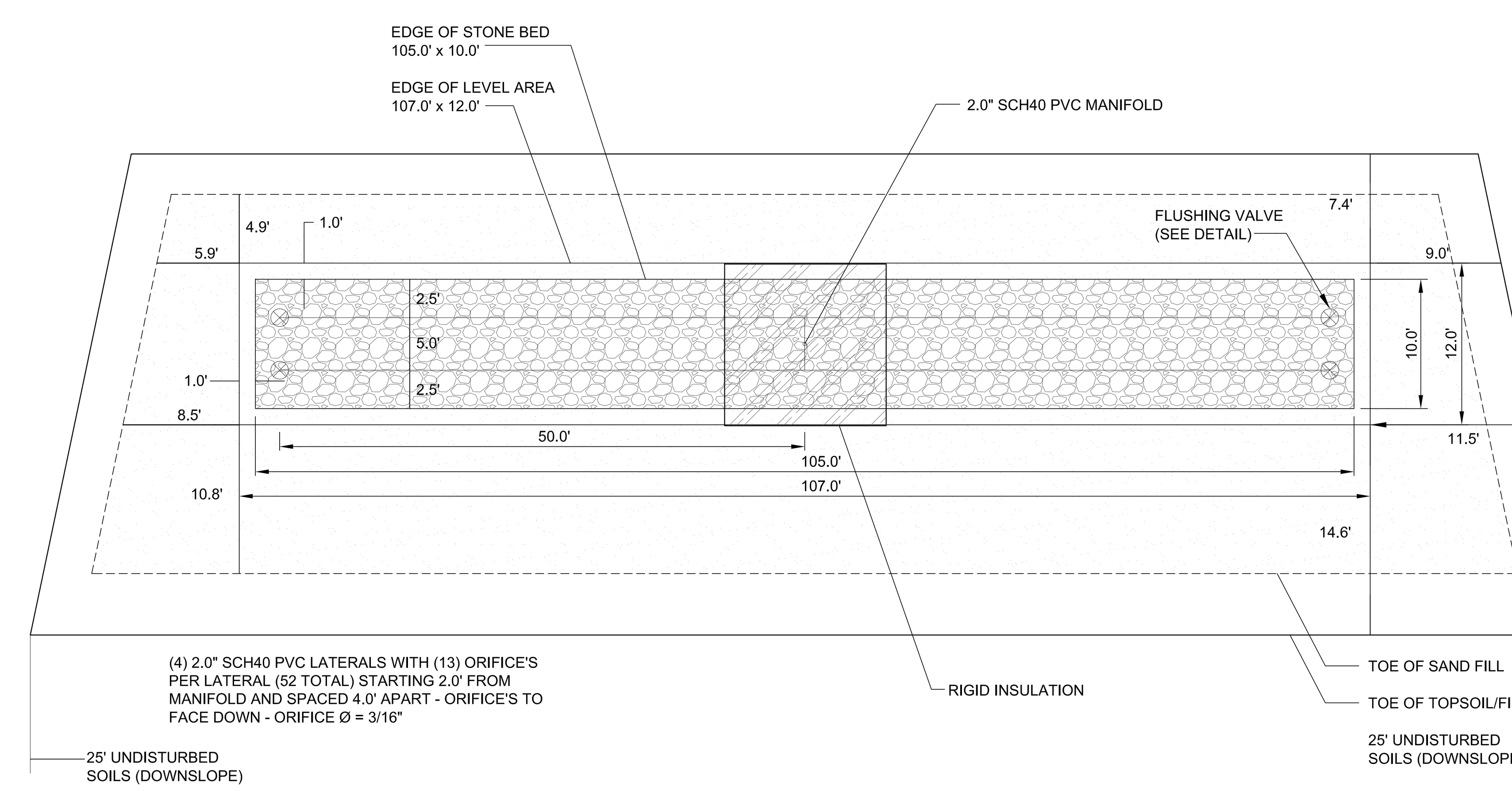

MOUND TYPE DISPOSAL SYSTEM - PLAN VIEW

NOT TO SCALE

NOT TO SCALE

THE CONTRACTOR SHALL NOTIFY "DIGSAFE" AT 1-888-DIG-SAFE PRIOR TO ANY EXCAVATION.

"I hereby certify that the design related information submitted with this application is true and correct, and that, in the exercise of my reasonable professional judgment, the "best-fix"design included in this application for a permit reasonably complies with the Vermont Wastewater System and Potable Water Supply Rules and the Vermont Water Supply Rules."

Aug. 15, 2018
Date

Steve Revell, CPG
Licensed Class B Designer #178

AMERICAN INSTITUTE OF PROFESSIONAL GEOLOGISTS — CERTIFICATE NUMBER 6259 — AIPG — STEPHEN REVELL — CERTIFIED PROFESSIONAL GEOLOGIST

LINCOLN APPLIED GEOLOGY, INC.
ENVIRONMENTAL CONSULTANTS
163 Revell Drive, Lincoln, Vermont 05443
(802) 453-4384, (802) 453-5399 (fax)
Web: www.lagvt.com
E-Mail: lagvt@lagvt.com

Numondo America, L.P. Property
5507 Ethan Allen Highway (Route 7)
Charlotte, Vermont

Replacement
Wastewater System Design Details

LAG PROJECT #	18061
DATE:	Aug. 15, 2018
SURVEYORS:	TAM
DRAWN BY:	TAM
FIGURE #:	2