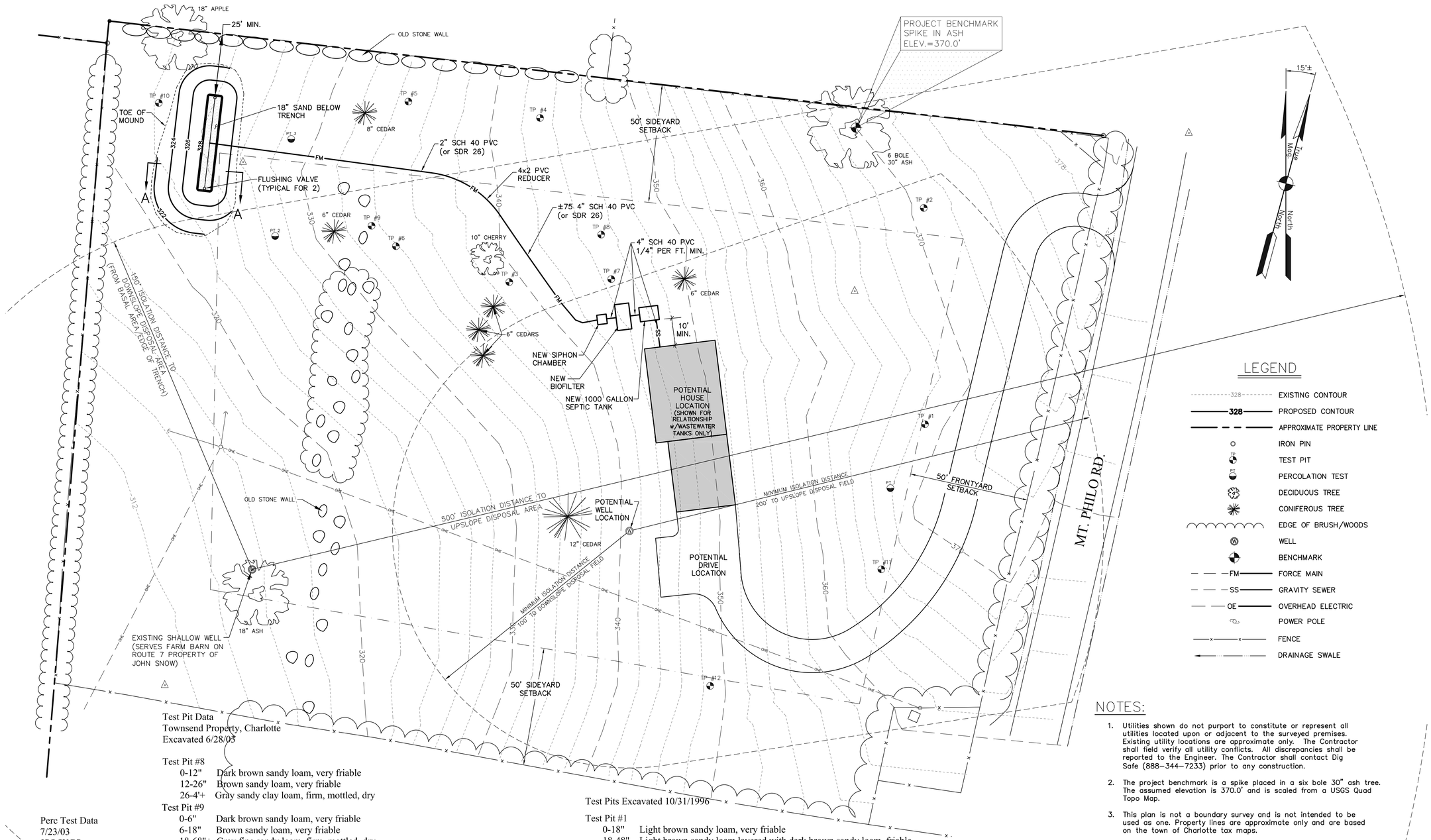

Test Pit Data
Townsend Property, Charlotte
Excavated 6/28/03

Test Pit #8
0-12" Dark brown sandy loam, very friable
12-26" Brown sandy loam, very friable
26-4'+ Gray sandy clay loam, firm, mottled, dry

Test Pit #9
0-6" Dark brown sandy loam, very friable
6-18" Brown sandy loam, very friable
18-68"+ Gray fine sandy loam, firm, mottled, dry

Test Pit #10
0-4" Dark brown sandy loam, very friable
4-12" Brown sandy loam, very friable
12-5'+ Gray fine sandy loam, dry
Mottled at 10", Moist at 3'

Test Pit #11
0-16" Light brown sandy loam, very friable
16-48" Light brown sandy loam layered with dark brown sandy loam with stones, friable
48"+ Olive brown sandy loam, firm
Dry

Test Pit #12
0-8" Light brown sandy loam, very friable
8-42" Light brown sandy loam layered with dark brown sandy loam with stones, friable
42"-6'+ Olive brown sandy loam, firm
Mottled at 20"
Dry

Perc Test Data
7/23/03
JSO/WGS

Perc #1 - 10min./in.

Perc #2 - 6min./in.

Perc #3 - 11min./in.

Test Pits Excavated 10/31/1996

Test Pit #1
0-18" Light brown sandy loam, very friable
18-48" Light brown sandy loam layered with dark brown sandy loam, friable
Mottled at 24"

Test Pit #2
0-10" Dark brown sandy loam, very friable
10-19" Light brown sandy loam, very friable
19"-30" Brown fine sandy loam with stones, friable
30"-48"+ Gray very fine sandy loam with stones, firm
Mottled at 23"

Test Pit #3
0-10" Dark brown sandy loam, very friable
10-28" Light brown sandy loam, very friable
28"-50"+ Gray very fine sandy loam with stones, firm, mottled
Mottled at 23" Downhill
26" Uphill

Test Pit #4
0-12" Dark brown sandy loam, very friable
12-20" Light brown sandy loam, very friable
20"-32" Brown fine sandy loam, friable, mottled
32"-60"+ Fine sandy loam, firm, mottled

Test Pit #5
0-11" Dark brown sandy loam, very friable
11-22" Light brown sandy loam, very friable
22"-40" Brown fine sandy loam, friable, mottled
40"-55"+ Fine sandy loam, firm, mottled
Mottled at 20"

Test Pit #6
0-12" Dark brown sandy loam, very friable
12-24" Brown fine sandy loam, friable
24"-46" Very fine sandy loam
Mottled at 22"

Test Pit #7
0-8" Dark brown sandy loam, very friable
8-24" Brown fine sandy loam, friable
24"-56" Fine sandy loam
Mottled at 20"

NOTES:

1. Utilities shown do not purport to constitute or represent all utilities located upon or adjacent to the surveyed premises. Existing utility locations are approximate only. The Contractor shall field verify all utility conflicts. All discrepancies shall be reported to the Engineer. The Contractor shall contact Dig Safe (888-344-7233) prior to any construction.
2. The project benchmark is a spike placed in a six bole 30" ash tree. The assumed elevation is 370.0' and is scaled from a USGS Quad Topo Map.
3. This plan is not a boundary survey and is not intended to be used as one. Property lines are approximate only and are based on the town of Charlotte tax maps.

SITE ENGINEER:

CIVIL ENGINEERING ASSOCIATES, INC.
10 MANSFIELD VIEW LANE SO. BURLINGTON, VT 05403
802-864-2323 FAX: 802-864-2271 web: www.cea-vt.com

COPYRIGHT © 2008 - ALL RIGHTS RESERVED

DRAWN
PJM
CHECKED
BCE
APPROVED
BCE

STATE OF VERMONT
B. CLARE ELLIOTT
#5694
REGISTERED PROFESSIONAL ENGINEER

OWNER:

J.E. TOWNSEND

PROJECT:

WASTEWATER SYSTEM DESIGN

6110 MT. PHILO ROAD CHARLOTTE VERMONT

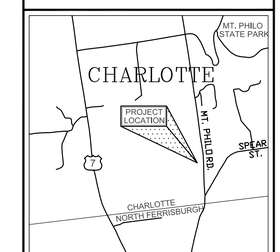

LOCATION MAP
1" = 2000'±

DATE	CHECKED	REVISION
10/22/08	BCE	WW PERMIT PLANS

WASTEWATER PLAN

DATE
OCT., 2008

SCALE
1" = 20'

PROJ. NO.
96284

DRAWING NUMBER
C1.0

P:\AutoCADD Projects\1996\96284\dwg\96284-2008.dwg, 10/23/2008 9:50:25 AM, pmead

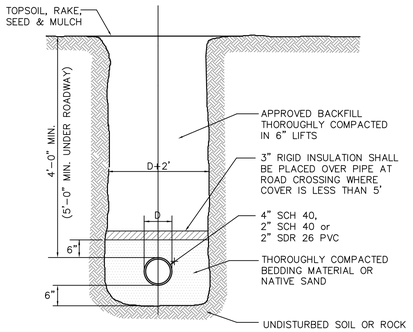

TYPICAL TRENCH DETAIL

N.T.S.

NOTES:

1. Compaction of backfill and bedding shall be a minimum of 90% (95% under roadway surfaces) of maximum dry density determined in the standard proctor test (ASTM D698).
2. Bedding material shall consist of crushed stone, gravel or sand with a maximum size of 3/4". Submit a sample to the Engineer for approval.
3. In trenches with unstable materials, trench bottom shall first be stabilized by placement of filter fabric then crushed stone (3/4" maximum).
4. Where 4 ft. of cover cannot be maintained the sewer pipe shall be protected against freezing by installation of a minimum of 3 inch thick styrofoam insulating sheets.
5. Approved backfill shall not contain any stones more than 12" in largest dimension (6" in roadways, 2" maximum diameter within 2' of the outside of the pipe), or contain any frozen, wet, or organic material.
6. Use 3 inch styrofoam sheets at all road crossings or areas that are to be plowed during the winter.
7. The sides of trenches 4' or more in depth entered by personnel shall be sheeted or sloped to the angle of repose as defined by O.S.H.A. standards.

MINIMUM ISOLATION DISTANCES – WASTEWATER DISPOSAL SYSTEM

(Contact Engineer for any Clarifications or Conflicts)

	Horizontal Distance (Ft.) Toe of Mound	Septic Tank
Shallow Well or Spring, Up Slope of Disposal Field	150*(Min.)	75
Shallow Well or Spring, Down Slope of Disposal Field	500*(Min.)	75
Drilled Well Serving 1 Home – Up Slope of Disposal Field	100*(Min.)	50
Drilled Well Serving 1 Home – Down Slope of Disposal Field	200*(Min.)	50
Municipal Water Main	50	50
Service Water Lines	25	25
Roadways, Driveways, Parking Lots	10	5
Stream, Watercourse, Lake or Impoundment	50	25
Drainage Swales, Roadway Ditches	25	--
Top of embankment or slope > 30%	25	10
Trees	10	10
Foundation, Footing, or Curtain Drains	35 (75 Downslope)	10
Replacement Area – Sides	10	--
Replacement Area – Uphill or Downhill	25	--
Property Line – 10' from toe (or 25' from edge of disposal system, whichever is greater.)	10 (25 Downslope)	

*Isolation distances to well locations may vary due to site conditions – contact Engineer for verification with the Vermont Water Supply Rule Regulations.

DISPOSAL FIELD DESIGN DATA

Performance based design (Desktop mounding analysis) – Mound
Filtrate disposal system
- –Maintain at least 3' between bottom of trench and seasonal high groundwater table for septic tank effluent. (Reduces to 2' for filtrate system)
- –In addition for desktop mounding, the system must maintain at least 3' separation between bottom of trench and mounded water table. (Reduces to 18" for filtrate system)
- –Maintain at least 4' between bottom of trench and bedrock. (Reduces to 2' for filtrate system).
- –Induced groundwater mounding is at least 6" below grade

Design Daily Flow:

–3 Bedroom Home at 140 gallons/bedroom = 420 gpd

Application Rate: (Mound)

–Q = Application rate = 1.0 gallons/square foot * 2.0 for filtrate effluent = 2.0 gallons/s.f.

Desktop Mounding Analysis:

Location	Ground Slope	Soil Type	Linear Loading Rate Factor (f)	Soil Thickness available for mounding	Soil thickness used in calculation (h)	Linear Loading Rate LLR=(h)(f)
TP 5/6	10.1–15%	Sandy Loam	33.7	18"–6"=12"	1.00 ft	33.7 gals/l.f.
TP 5/6	10.1–15%	Fine Sandy Loam	18.7	18"–6"=12"	1.00 ft	18.7 gals/l.f.
TP 10	8.1–10%	Sandy Loam	33.7	10"–6"=4"	0.33 ft	11.1 gals/l.f.

Absorption Trench Area:

–420 gpd at 2.0 gallons/square foot = 210 square feet required
TP 5 location – Option 1
–420 gpd at 33.7 gallons/l.f. = 12.5 minimum linear feet required
–Use a 10' x 21' trench = 210 square feet provided
TP 5 location – Option 2
–420 gpd at 18.7 gallons/l.f. = 22.5 minimum linear feet required
–Use a 9.5' x 22.5' trench = 214 square feet provided
TP 10 location
–420 gpd at 11.1 gallons/l.f. = 38 minimum linear feet required
–Use a 5.5' x 40' trench = 220 square feet provided

Sand Req'd below trench: (filtrate system)

TP 5 location
–Sand depth below trench, 24" above H20 = 24" – 18" = 6"
–Sand depth below trench, 18" above mounded H20 = 18" – 6" = 12" (Controls, use 12" sand)
TP 10 location
–Sand depth below trench, 24" above H20 = 24" – 10" = 14" (Controls, use 18" sand)
–Sand depth below trench, 18" above mounded H20 = 18" – 6" = 12"

Basal Area:

–420 gpd at 0.74 gallons/square foot = 568 square feet required
–Effective area of 40' x 17' = 680 square feet provided
Pump Requirements:

–Nine (9) ⅜" diameter orifice holes 4'6" o.c.
–2.87 gpm/orifice x 9 = 26 gpm
–TDH @ 26 gpm
Friction 5
Residual 3
Total 8
–Use #413 siphon @ 140 gals/minute. Maintain siphon outlet invert a minimum of 10' above trench lateral invert.

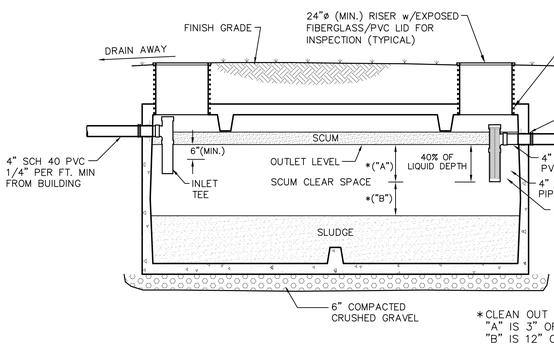

1000 GALLON SEPTIC TANK

N.T.S.

Septic Tank Notes

1. Septic tank shall be a precast concrete tank, unless otherwise approved.
2. Maintenance
   - At least once a year, the depth of sludge and scum in the septic tank should be measured. The tank should be pumped if:
     - The sludge is closer than twelve inches to the outlet baffle or;
     - The scum layer is closer than three inches to the outlet baffle.
   - Under no circumstances should anyone enter a septic tank.
3. Recommendations
   - The use of garbage grinders is discouraged as sludge accumulation in the septic tank can be increased by up to 40%. If used, the septic tank will require more frequent pumping.
   - The septic system is designed to handle human waste and toilet paper, plus water from plumbing fixtures such as toilets, baths and sinks. Moderate use of household cleaners, detergents and bleach should not damage your system; however, indiscriminate use may cause problems. Non-degradable paper products and any other non-biodegradable substances should not be put in your wastewater system.
   - Minimize the amount of water used in the household. Excessive water could flush solids from the septic tank to the disposal field which leads to clogging or plugging of the piping. When dishwashers and washers are used, make sure loads are full and stagger their use to reduce peak flows, i.e. stagger loads of laundry over several days instead of one day.
4. Walkways, patios and decks or other permanent structures should not be constructed over the septic tank.
5. There should be no need to use commercial "starter", "bacterial feeds", or "cleaners", etc. Bacteria in a septic tank system occurs naturally.

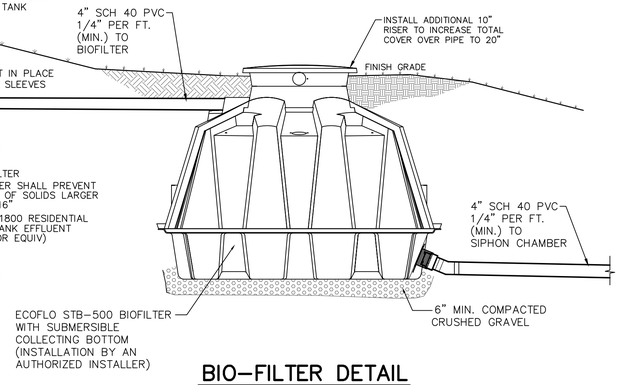

BIO-FILTER DETAIL

N.T.S.

GENERAL NOTES:
–ALL TANKS TO BE WATER-PROOF w/BOOTED CONNECTIONS
–INLET & OUTLET RISERS REQUIRED

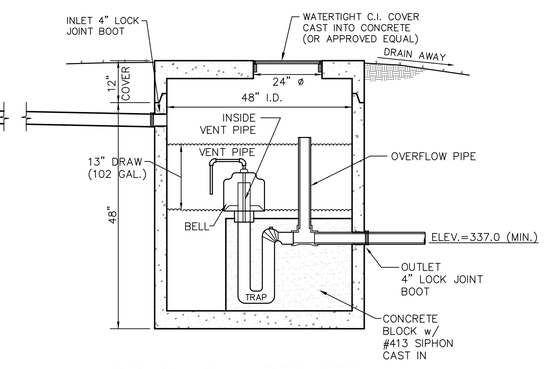

SIPHON CHAMBER DETAIL

N.T.S.

SITE ENGINEER:

CIVIL ENGINEERING ASSOCIATES, INC.
10 MANSFIELD VIEW LANE SO. BURLINGTON, VT 05403
802-864-2323 FAX: 802-864-2271 web: www.cea-vt.com

COPYRIGHT © 2008 – ALL RIGHTS RESERVED

DRAWN PJM
CHECKED BCE
APPROVED BCE

STATE OF VERMONT – BLAKE ELLIOTT – #5694 – REGISTERED PROFESSIONAL ENGINEER

OWNER:

J.E. TOWNSEND

PROJECT:

WASTEWATER SYSTEM DESIGN

6110 MT. PHILO ROAD CHARLOTTE VERMONT

DATE	CHECKED	REVISION
10/22/08	BCE	WW PERMIT PLANS

WASTEWATER DETAILS

DATE OCT., 2008
SCALE AS SHOWN
PROJ. NO. 96284
DRAWING NUMBER C2.0

P:\AutoCADD Projects\1996\962841\dwg\962841-2008.dwg, 10/23/2008 9:51:22 AM, pmead

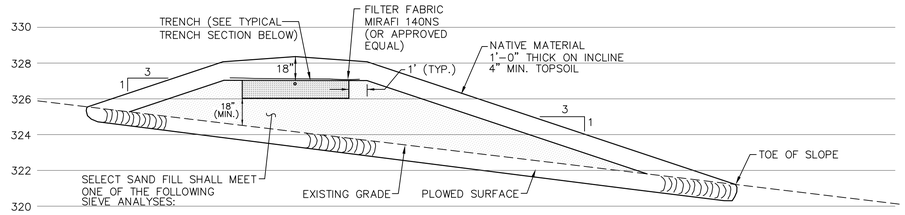

SIEVE #	% PASSING
10	85–100
40	25–75
60	0–30
100	0–10
200	0–5

SIEVE #	% PASSING
8	80–100
16	50–85
30	25–60
50	10–30
100	2–10

SIEVE #	% PASSING
10	85–100
40	30–50
200	0–10

SECTION A–A

NTS

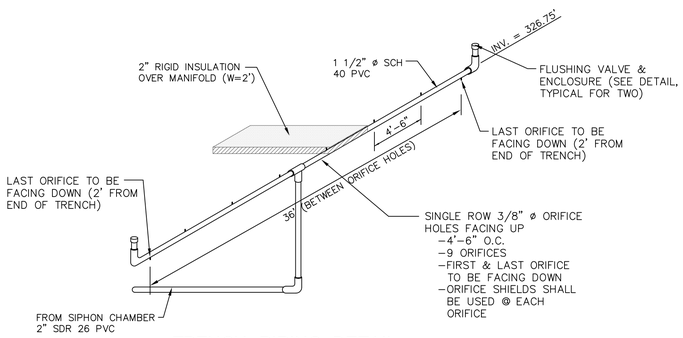

TRENCH PIPING DETAIL

N.T.S.

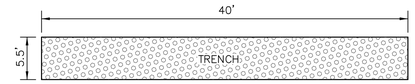

TYPICAL TRENCH PLAN

N.T.S.

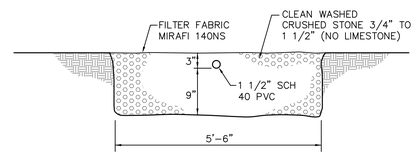

TYPICAL TRENCH SECTION

N.T.S.

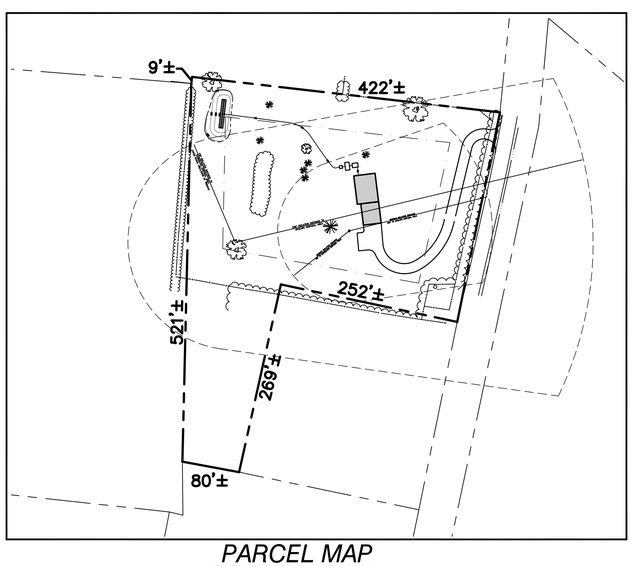

PARCEL MAP

1" = 100'

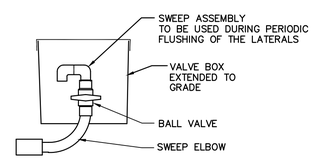

FLUSHING VALVE DETAIL

NTS

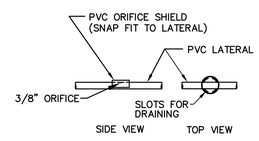

ORIFICE SHIELD DETAIL

NTS

DISPOSAL FIELDS & FORCE MAINS

PART 1 – GENERAL

1.01 Summary

A. Section includes:

1. Wastewater Disposal Field
2. Force Main Materials

1.02 References

A. All work shall be done in accordance with the State of Vermont Environmental Protection Rules effective September 29, 2007.

PART 2 – PRODUCTS

2.01 General

A. Disposal Fields: Schedule 40 PVC pipe meeting the requirements of the latest revision of ASTM Specification D–1785. Fittings used in the disposal fields shall be compatible with distribution lines material.

B. Force Mains: PVC pipe shall conform in all respects to the latest revisions of ASTM Specifications D–2241. All pipe fittings shall be SDR 26 (or SCH 40) clearly marked as follows:

– Manufacturer's Name and Trademark
– Nominal Pipe Size (as shown on plans)
– Material Designation

Joints shall be push–on type using elastomeric gaskets factory installed conforming to ASTM Specification D–3212.

C. Crushed stone shall be clean, durable and no smaller than 3/4" or larger than 1 1/2 inches in diameter.

PART 3 – EXECUTION

3.01 Mound Construction

A. Above ground vegetation shall be closely cut and removed from the ground surface throughout the area to be utilized for the placement of the fill material. Prior to plowing, the dosing pump discharge line from the pump chamber or dosing chamber to the point of connection with the distribution piping header shall be installed. The area shall then be plowed to a depth of seven to eight inches, parallel to the land contour with the plow throwing the soil upslope to provide a proper interface between the fill and natural soils. Tree stumps should be cut flush with the surface of the ground and roots should not be pulled. Once plowing of the mound area is completed, the area shall be fenced to prevent vehicles and equipment from entering the plowed area.

B. To prevent compaction, construction equipment shall not be moved across the plowed surface or the effluent disposal area. However, after placement of a minimum of six inches of sand fill over the plowed area, construction equipment may be driven over the protected surface to expedite construction. Construction equipment shall be kept off the area down gradient of the disposal field. Construction and/or plowing shall not be initiated when the soil moisture content is high.

C. Construction should be initiated immediately after preparation of the soil interface by placing all of the sand fill needed for the mound to a minimum depth of 21 inches. This depth will permit excavation of trenches to accommodate the crushed stone (12 inches) necessary for the distribution piping.

D. The pressure distribution pipe should be laid level on top of the stone and flushing valves installed at the ends of the pipe. Upon completion of the distribution piping, the qualified consultant shall test the system with clean water. The test shall show that a minimum pressure of three feet of head is present at the ends of the pipe and that the difference in discharge rate between the two orifices with the greatest difference in discharge rates is not greater than 15 percent. After connecting the distribution pipe to the force main, the distribution pipe shall be covered with at least two inches of clean stone aggregate. The stone aggregate shall be covered completely with filter fabric.

E. After installation of the distribution system, crown the entire mound with cover of soil less permeable than the mound fill, covering with 12 inches on the side slopes and a minimum of 18 inches over the center of the mound. Native soil from the site is normally suitable for cover material, though the top two to four inches of this cover should be topsoil. The entire mound shall be seeded, sodded or otherwise provided with vegetative cover to assure stability of the installation.

F. The area surrounding the disposal field shall be graded to provide diversion of surface runoff waters if required.

3.02 Testing Notes

A. Testing of pressure distribution shall be done in the Engineer's presence. Pressure shall be measured to insure a minimum of 1 psi. (See section D above).

B. The distribution line shall then be carefully placed on the bedding with no slope, orifice shields snapped into place, and covered with at least 2" of crushed stone.

C. All work shall be done in accordance with the State of Vermont Environmental Protection Rules.

D. Force Main

1. General: All force mains shall pass the hydrostatic pressure test and leakage test described herein. Prior to testing, all anchors and braces shall be installed. All concrete thrust blocks and restraints shall be in place and cured at least seven days. All buried pipe shall be backfilled. Suitable test plugs shall be installed and air release valves shall be installed at the high points.
2. Hydrostatic Test: The following procedure shall be used:
   a. All air release valves shall be opened and the pipe shall be filled with water at a rate not to exceed the venting capacity of the air release valves.
   b. The water pressure shall be raised to 150 percent of the designed operating pressure or 60 psi minimum at the highest point.
   c. Failure to hold the designated pressure within 5 psi of the specified test pressure for the two hour period constitutes a failure of the section tested.
3. Leakage Test: The following procedure shall be used:
   a. Leakage shall be defined as the quantity of water that must be supplied into the pipe being tested to maintain pressure within 5 psi of the specified test pressure.
   b. No pipe installation shall be accepted if the leakage is greater than that determined by the following formula:

$$L = \frac{ND(P)^{0.5}}{7{,}400}$$

Whichever is less

$$L = \frac{SD(P)^{0.5}}{133{,}100}$$

S = Length of Pipe Testing
L = Allowable Leakage in Gal/Hr
D = Nominal Diameter of Pipe (")
P = Average Test Pressure (psi)
N = Number of Joints in the Pipeline Tested

All testing shall be conducted in accordance with AWWA C600–87 or latest revision.

E. Prior to use of the system, the qualified consultant shall submit a written report to the Owner stating that the system has been installed according to the approved plans and permit. The report shall specifically address the inspection of the site preparations and include numerical results of the orifice discharge rate comparison.

SITE ENGINEER:

CIVIL ENGINEERING ASSOCIATES, INC.
10 MANSFIELD VIEW LANE SO. BURLINGTON, VT 05403
802-864-2323 FAX: 802-864-2271 web: www.cea-vt.com

COPYRIGHT © 2008 – ALL RIGHTS RESERVED

DRAWN
PJM

CHECKED
BCE

APPROVED
BCE

STATE OF VERMONT B. CLARKE ELLIOTT #5694 REGISTERED PROFESSIONAL ENGINEER

OWNER:

J.E. TOWNSEND

PROJECT:

WASTEWATER SYSTEM DESIGN

6110 MT. PHILO ROAD CHARLOTTE VERMONT

DATE	CHECKED	REVISION
10/22/08	BCE	WW PERMIT PLANS

WASTEWATER DETAILS

DATE
OCT., 2008

SCALE
AS SHOWN

PROJ. NO.
96284

DRAWING NUMBER
C2.1

P:\AutoCADD Projects\1996\96284\dwg\96284-2008.dwg, 10/23/2008 9:51:51 AM, pmead