ANR Environmental Interest Locator

Vermont Agency of Natural Resources (ANR)

Haz Mat Sites

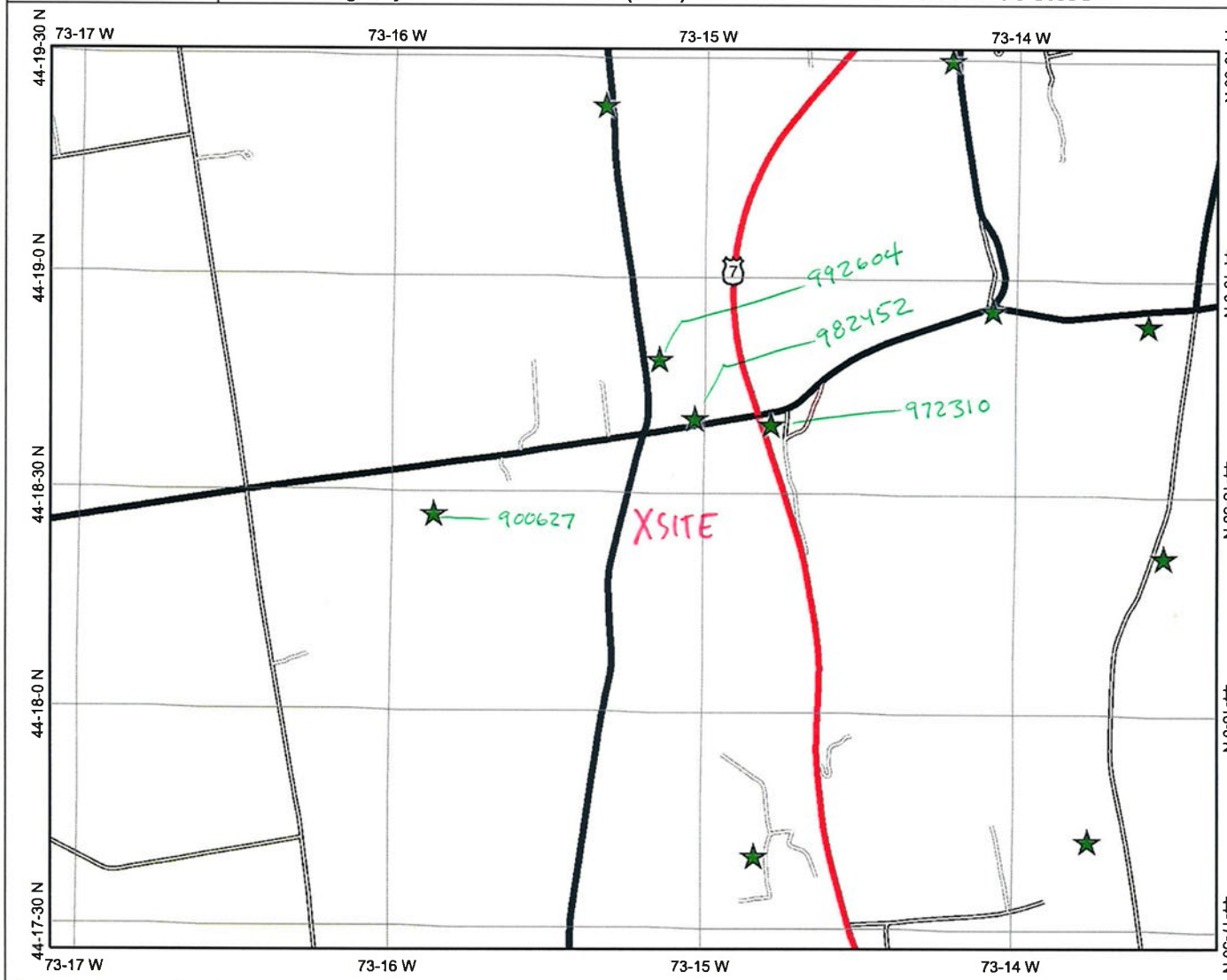

0 2500 5000 7500 ft.

Map center: 439863, 201148

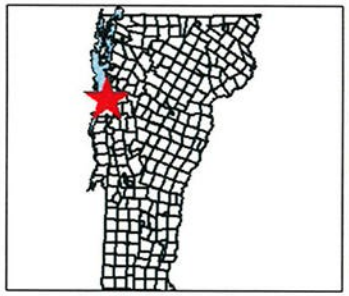

Legend

- Hazardous Waste Site
- Hazardous Waste Site Generator
- Roads
  - US Highway
  - Vermont State Highway
  - Class One
  - Class Two
  - Legal Trail
  - Emergency U-Turn Area
  - Proposed Class Two
  - Proposed Class Three
  - Proposed Vermont State Highway
  - Proposed US Highway
  - Proposed Interstate
  - Discontinued
  - Interstate
  - Class Three
  - Class Four
  - State/National Forest Highway
  - Military Road (No Public Access)
  - Private Road
- Hydrography Lakes and Ponds (VHD 5k)
- Hydrography (VHD 5k)
- VT County Boundary
- VT Town Boundaries (No Fill)
- VT State Boundary (Fill)

VT State Plane Meters (NAD83)

N

Scale: 1:26,813

DISCLAIMER: This map is for general reference only. Data layers that appear on this map may or may not be accurate, current, or otherwise reliable. VCGI and the State of Vermont make no representations of any kind, including but not limited to the warranties of merchantability or fitness for a particular use, nor are any such warranties to be implied with respect to the data on this map.

URL: http://maps.vermont.gov/imf/sites/ANR_NATRESViewer/jsp/launch.jsp

3/14/12

ANR Environmental Interest Locator

Vermont Agency of Natural Resources (ANR)

Floodway

0 325 650 975 ft.

Map center: 439891, 201286

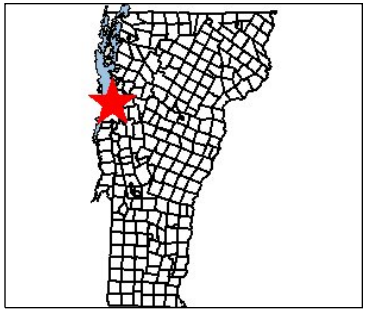

Legend

Roads

- US Highway
- Vermont State Highway
- Class One
- Class Two
- Legal Trail
- Emergency U-Turn Area
- Proposed Class Two
- Proposed Class Three
- Proposed Vermont State Highway
- Proposed US Highway
- Proposed Interstate
- Discontinued
- Interstate
- Class Three
- Class Four
- State/National Forest Highway
- Military Road (No Public Access)
- Private Road

DFIRM Floodways (Preliminary)

- FLOODWAY

Special Flood Hazard Areas (Preliminary DFIRMS)

- AE (1-percent annual chance floodplains with elevations)
- A (1-percent annual chance floodplains without elevations)
- AO (1-percent annual chance zone of shallow flooding 1-3 feet)
- 0.2-percent annual chance flood hazard zone

DFIRM Floodways (All Available Counties Effective 7.2011)

- FLOODWAY

Special Flood Hazard Areas (All Available Counties Effective 7.2011)

- AE (1-percent annual chance floodplains with elevations)
- A (1-percent annual chance floodplains without elevations)
- AO (1-percent annual chance zone of shallow flooding 1-3 feet)
- 0.2-percent annual chance flood hazard zone

Hydrography Lakes and Ponds (VHD 5k)

VT State Plane Meters (NAD83)

N

Scale: 1:3,352

DISCLAIMER: This map is for general reference only. Data layers that appear on this map may or may not be accurate, current, or otherwise reliable. VCGI and the State of Vermont make no representations of any kind, including but not limited to the warranties of merchantability or fitness for a particular use, nor are any such warranties to be implied with respect to the data on this map.

Notes: None

URL: http://maps.vermont.gov/imf/sites/ANR_NATRESViewer/jsp/launch.jsp

3/14/12

ANR Environmental Interest Locator

Vermont Agency of Natural Resources (ANR)

Source Protection

0 325 650 975 ft.

Map center: 439891, 201286

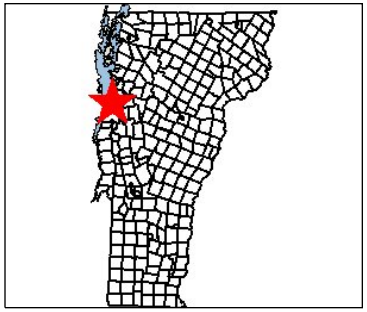

Legend

Roads
- US Highway
- Vermont State Highway
- Class One
- Class Two
- Legal Trail
- Emergency U-Turn Area
- Proposed Class Two
- Proposed Class Three
- Proposed Vermont State Highway
- Proposed US Highway
- Proposed Interstate
- Discontinued
- Interstate
- Class Three
- Class Four
- State/National Forest Highway
- Military Road (No Public Access)
- Private Road
- SurfaceWaterSPA
- GroundWaterSPA
- Class IV Groundwater SPA
- Hydrography Lakes and Ponds (VHD 5k)
- Hydrography (VHD 5k)
- VT County Boundary
- VT Town Boundaries (No Fill)
- NAIP Color Orthophotos 2009
- VT State Boundary (Fill)

VT State Plane Meters (NAD83)

N

Scale: 1:3,352

DISCLAIMER: This map is for general reference only. Data layers that appear on this map may or may not be accurate, current, or otherwise reliable. VCGI and the State of Vermont make no representations of any kind, including but not limited to the warranties of merchantability or fitness for a particular use, nor are any such warranties to be implied with respect to the data on this map.

Notes: None affected

URL: http://maps.vermont.gov/imf/sites/ANR_NATRESViewer/jsp/launch.jsp

3/14/12

ANR Environmental Interest Locator

Vermont Agency of Natural Resources (ANR)

Watershed

0 325 650 975 ft.

Map center: 439891, 201286

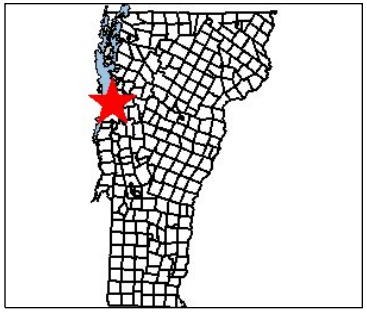

Legend

Roads

- US Highway
- Vermont State Highway
- Class One
- Class Two
- Legal Trail
- Emergency U-Turn Area
- Proposed Class Two
- Proposed Class Three
- Proposed Vermont State Highway
- Proposed US Highway
- Proposed Interstate
- Discontinued
- Interstate
- Class Three
- Class Four
- State/National Forest Highway
- Military Road (No Public Access)
- Private Road
- Stormwater Impaired SubWatershed
- Stormwater Impaired Watershed
- Hydrography Lakes and Ponds (VHD 5k)
- Hydrography (VHD 5k)
- VT County Boundary
- VT Town Boundaries (No Fill)
- NAIP Color Orthophotos 2009
- VT State Boundary (Fill)

VT State Plane Meters (NAD83)

N

Scale: 1:3,352

DISCLAIMER: This map is for general reference only. Data layers that appear on this map may or may not be accurate, current, or otherwise reliable. VCGI and the State of Vermont make no representations of any kind, including but not limited to the warranties of merchantability or fitness for a particular use, nor are any such warranties to be implied with respect to the data on this map.

Notes: None impared

URL: http://maps.vermont.gov/imf/sites/ANR_NATRESViewer/jsp/launch.jsp

3/14/12

ANR Environmental Interest Locator

Vermont Agency of Natural Resources (ANR)

Wetlands

0 325 650 975 ft.

Map center: 439891, 201286

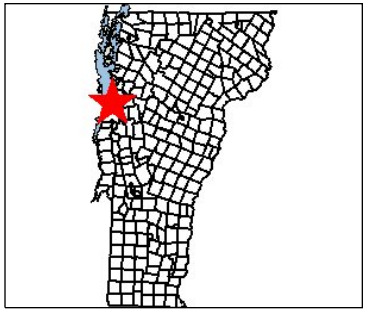

Legend

Roads
- US Highway
- Vermont State Highway
- Class One
- Class Two
- Legal Trail
- Emergency U-Turn Area
- Proposed Class Two
- Proposed Class Three
- Proposed Vermont State Highway
- Proposed US Highway
- Proposed Interstate
- Discontinued
- Interstate
- Class Three
- Class Four
- State/National Forest Highway
- Military Road (No Public Access)
- Private Road
- Wetland Advisory Layer: Class 3 Wetlands

VSWI
- Class 1 Wetland
- Class 2 Wetland
- Hydrography Lakes and Ponds (VHD 5k)
- Hydrography (VHD 5k)
- VT County Boundary
- Hydric Soils
- Hydric Soils
- VT Town Boundaries (No Fill)
- NAIP Color Orthophotos 2009
- VT State Boundary (Fill)

VT State Plane Meters (NAD83)

N

Scale: 1:3,352

DISCLAIMER: This map is for general reference only. Data layers that appear on this map may or may not be accurate, current, or otherwise reliable. VCGI and the State of Vermont make no representations of any kind, including but not limited to the warranties of merchantability or fitness for a particular use, nor are any such warranties to be implied with respect to the data on this map.

Notes: None affected

URL: http://maps.vermont.gov/imf/sites/ANR_NATRESViewer/jsp/launch.jsp

3/14/12

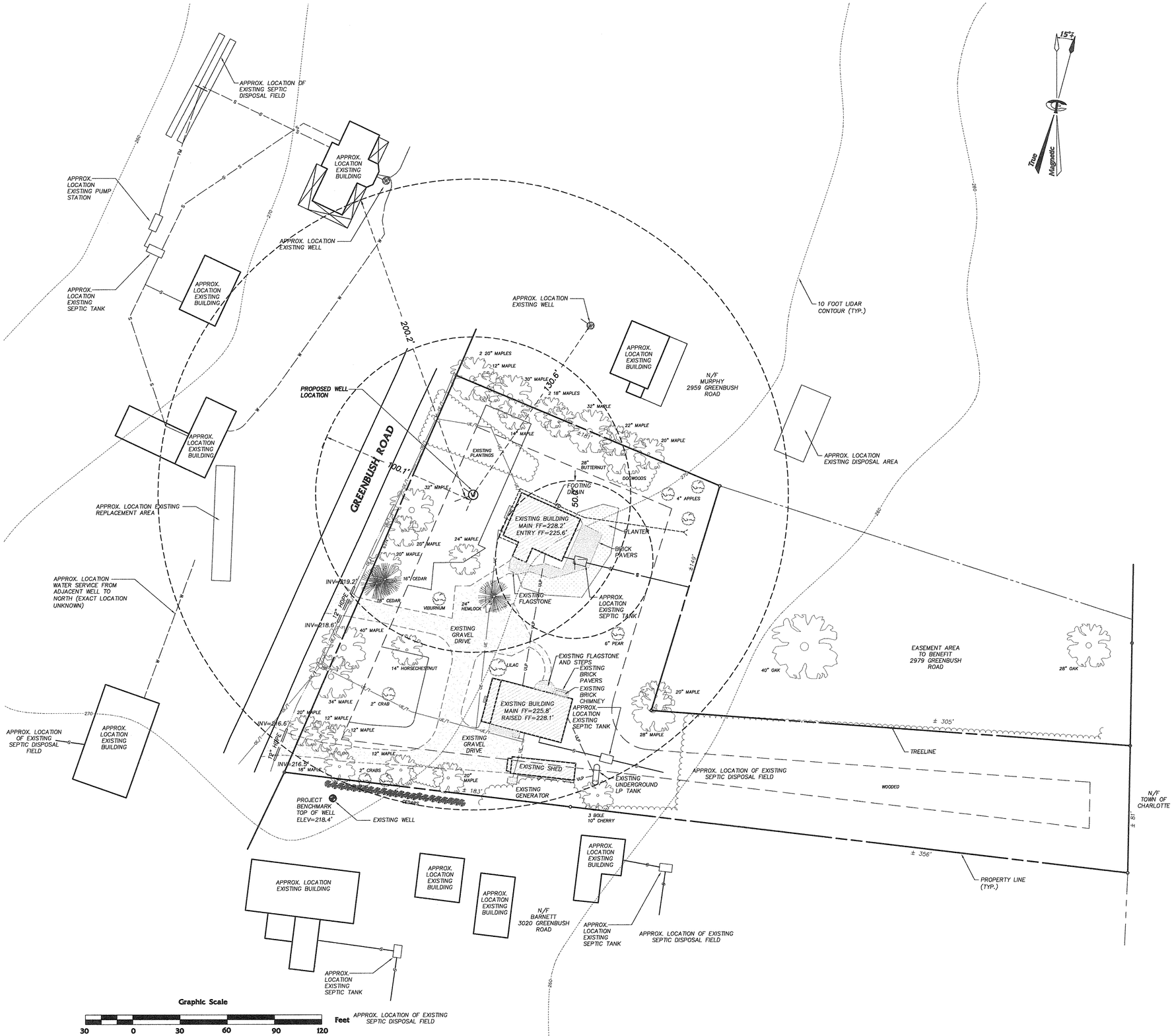

GENERAL NOTES:

1. OWNER OF RECORD: GEORGE EWINS, JR.
2. TAX PARCEL ID: 0004-2979
3. PHYSICAL ADDRESS OF PROPERTY: 2979 GREENBUSH ROAD
4. PARCEL SIZE: 1.8 AC±
5. ZONING DISTRICT: WEST CHARLOTTE VILLAGE
6. TOPOGRAPHIC INFORMATION BASED ON LIDAR.
7. THE LOCATION OF EXISTING UNDERGROUND UTILITIES AND IMPROVEMENTS SHOWN ARE ASSUMED BASED ON RESEARCH, UTILITY PLANS PROVIDED BY OTHERS, AND/OR SURFACE EVIDENCE AVAILABLE AND WERE OBTAINED IN A MANNER CONSISTENT WITH THE ORDINARY STANDARD OF PROFESSIONAL CARE AND HAVE NOT BEEN INDEPENDENTLY VERIFIED BY THE OWNER OR THE DESIGN ENGINEER. ENGINEER SHALL BE NOTIFIED IF ANY DISCREPANCIES ARE ENCOUNTERED. ACTUAL LOCATION OF UNDERGROUND UTILITIES MAY VARY. DIGSAFE MUST BE CONTACTED PRIOR TO AY EXCAVATION.

REFERENCE PLANS:

1. PLAN ENTITLED "EXISTING CONDITIONS SITE PLAN" DATED AUG. 2011 BY CIVIL ENGINEERING ASSOCIATES, INC.

TRUDELL CONSULTING ENGINEERS (TCE)

478 Blair Park Road P.O. Box 308 (802) 879-6331(phone)
Williston, Vermont 05495 (802) 879-0060(fax)

Visit Us on the Web at: www.TrudellConsulting.com

USE AND INTERPRETATION OF THE DRAWINGS

1. Unless otherwise noted, these Drawings are intended for preliminary planning, coordination with other disciplines or utilities, and/or approval from the regulatory authorities. They are not intended as construction drawings unless noted as such.

2. Only drawings specifically marked "For Construction" are intended to be used in conjunction with contract documents, specifications, owner/contractor agreements and to be fully coordinated with other disciplines, including but not limited to, the Architect, if applicable. These Drawings shall not be used for construction layout. Contact TCE for any construction surveying services or to obtain electronic data suitable for construction layout.

3. These Drawings are specific to the Project and are not transferable. As instruments of service, these drawings, and copies thereof, furnished by TCE are its exclusive property. Changes to the drawings may only be made by TCE. If errors or omissions are discovered, they shall be brought to the attention of TCE immediately.

4. By use of these drawings for construction of the Project, the Owner represents that they have reviewed, approved, and accepted the drawings and have met with all applicable parties/disciplines to insure these plans are properly coordinated with other aspects of the Project. The Owner and Architect, are responsible for any buildings shown, including an area measured five (5) feet around any building.

5. It is the User's responsibility to ensure this copy contains the most current revisions.

No.	Description	Date	By

Revisions

STATE OF VERMONT
JAMAN T. NORDENE
NO. 605-45
CIVIL
LICENSED
PROFESSIONAL ENGINEER

Project Title

GEORGE EWINS

2979 Greenbush Road Charlotte, Vermont

Sheet Title

Site Plan

Drawing Number : 2011058-50 Extension : 1
Project manager : NTH Drawn : RMP
Date : 4/4/12 F.B. 000 Scale : 1" = 30'
Project reference : XXX X-Ref : XXX
Bench File : XXX
Approved

C5.01

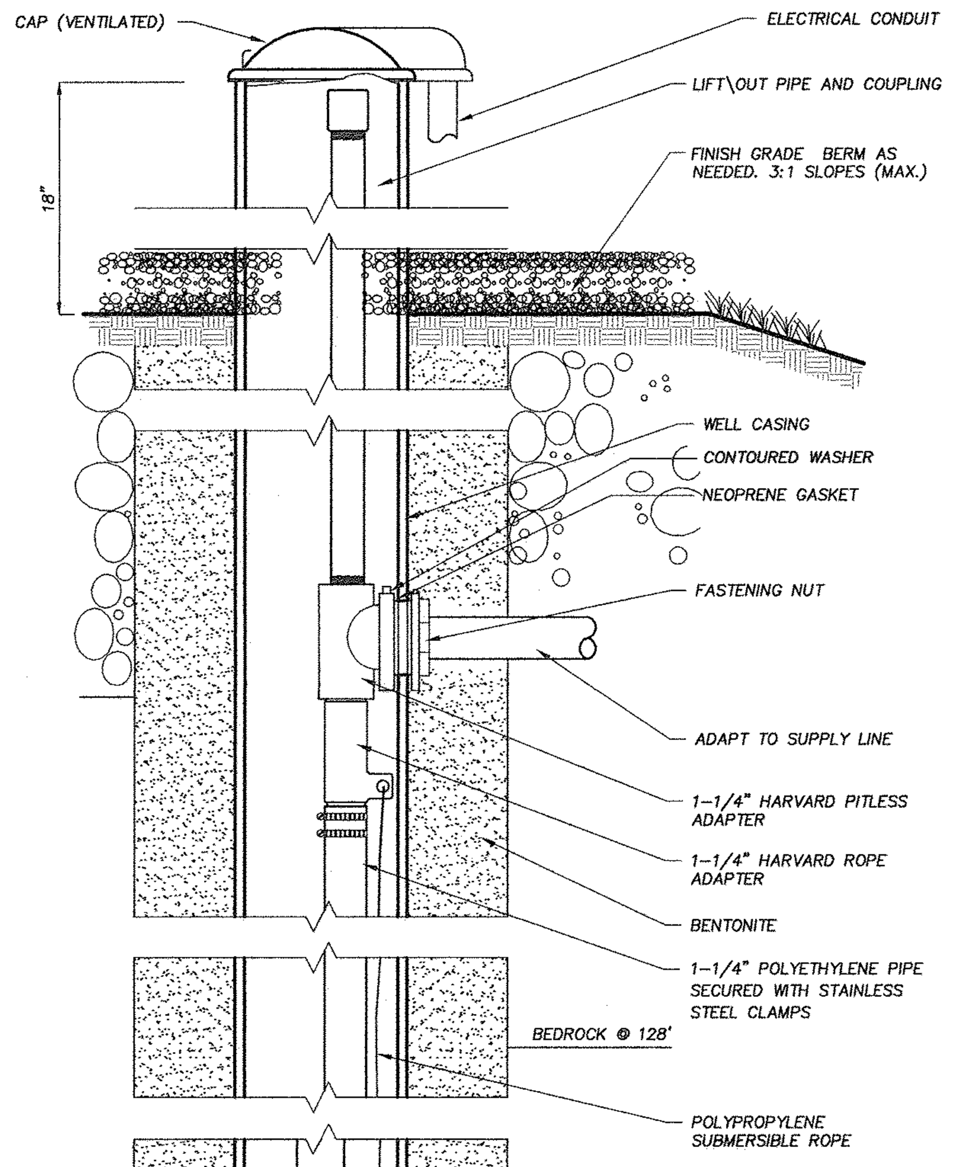

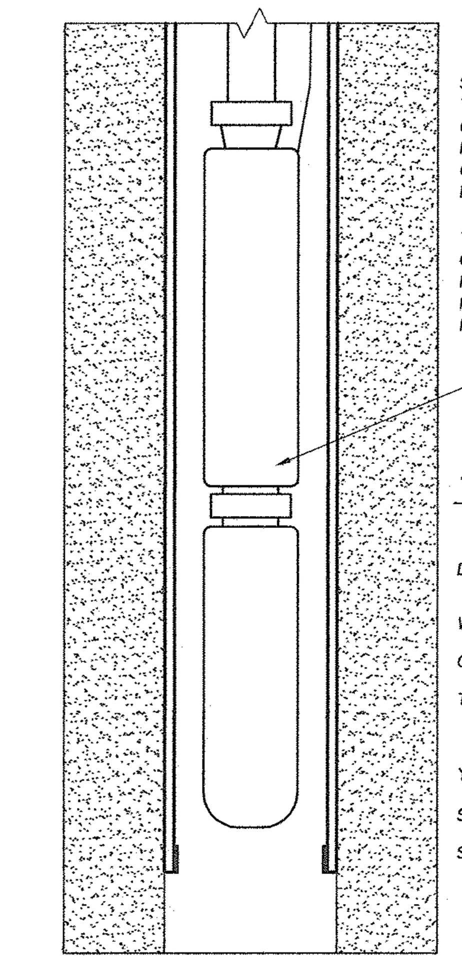

SPECIAL NOTES:
THE WELL SHOWN ON THE SITE PLAN MEETS CURRENT STATE SETBACKS AND IN NO WAY IS AN ASSURANCE THAT THE QUALITY OR QUANTITY OF WATER THAT WILL BE FOUND IN THAT LOCATION WILL BE SUFFICIENT.

THE PROPOSED DRILLED WELL SHALL BE CONSTRUCTED ACCORDING TO THE ENVIRONMENTAL PROTECTION RULES CHAPTER 21 WATER SUPPLY RULE APPENDIX A, PART 12 CONSTRUCTION & ISOLATION STANDARDS FOR WELLS.

PUMP : TBD' BELOW SURFACE (PUMP SHOWN NEAR CASING EXTENT FOR CLARITY ONLY)

WELL DRILLER'S REPORT

DRILLED BY : HA MANOSH CORPORATION
TAGGED: WELL #TBD

WELL COMPLETED ON X/XX/XX

GROUTED: TBD

TOTAL DEPTH TBD'
TBD' OF X" STEEL CASING

YIELD FOR WELL: X GPM (BLOW TEST)
STATIC LEVEL: 0'

SOIL INFORMATION:

0'-X'	?
X'-Y'	??
Y'-Z'	???
Z'-Q'	????

1 EXISTING WELL DETAIL

2"=1'0"

2008 TRUDELL CONSULTING ENGINEERS LAST REVISED 01/07/08 WTR-033S

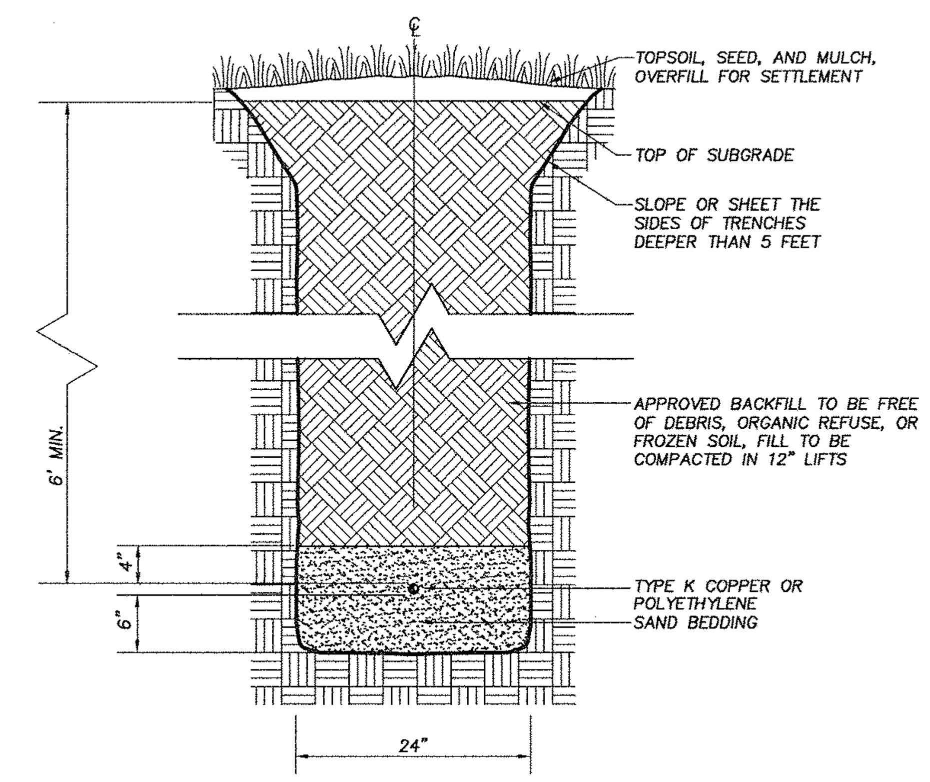

2 TYPICAL WATER SERVICE TRENCH

3/4"=1'-0"

2011 TRUDELL CONSULTING ENGINEERS LAST REVISED 2/07/11 WTR-020S

CONTRACTOR'S CERTIFICATION REQUIRED

PRIOR TO THE DESIGN ENGINEER CERTIFYING THAT THE INSTALLATION HAS BEEN INSTALLED IN ACCORDANCE WITH THE PERMITTED DESIGN, THE CONTRACTOR SHALL PROVIDE A CERTIFICATION THAT THE WATER SYSTEM WAS INSTALLED AND TESTED IN ACCORDANCE WITH THE APPROVED DESIGN PLANS. STATE PERMITS REQUIRE THERE SHALL BE NO DEVIATIONS FROM THE APPROVED PLANS WITHOUT PRIOR APPROVALS. THE DESIGN ENGINEER SHALL BE NOTIFIED AND ALLOWED TO OBSERVE THE CRITICAL PHASES OF CONSTRUCTION INCLUDING ANY REQUIRED TESTS. LIKEWISE, THE DESIGN ENGINEER SHALL BE NOTIFIED OF ANY DEVIATIONS FROM THE APPROVED PLANS. SINCE THE DESIGN ENGINEER DOES NOT CUSTOMARILY OBSERVE ALL PHASES OF THE WORK, OR ALL TESTING, HE MAY RELY ON THE CONTRACTOR'S CERTIFICATION AS THE BASIS FOR FINAL CERTIFICATION. THE CONTRACTOR SHALL THEREFORE SIGN AND RETURN A COPY OF THE FOLLOWING CERTIFICATION UPON COMPLETION OF THE WORK:

"I HEREBY CERTIFY THAT I HAVE INSTALLED, PROPERLY TESTED, AND SUCCESSFULLY PASSED THOSE TESTS, AND THE WATER SYSTEM(S) ARE BUILT IN ACCORDANCE WITH THE APPROVED DESIGN PLANS AND APPLICABLE PERMIT CONDITIONS."

CONTRACTOR NAME ______________________________

AUTHORIZED AGENTS NAME ______________________________

SIGNATURE ____________________ DATE ____________

NOTE ANY DEVIATIONS FROM APPROVED PLANS HERE:

____
____
____
____

3 CONTRACTOR'S CERTIFICATION FOR POTABLE WATER SYSTEMS

2009 TRUDELL CONSULTING ENGINEERS LAST REVISED 11/06/09 WTR-064S

CONSTRUCTION NOTES:

1. CONTRACT DOCUMENTS: THESE PLANS WERE PREPARED BY TRUDELL CONSULTING ENGINEERS (TCE) AND ARE INTENDED TO BE USED IN CONJUNCTION WITH THE STANDARD GENERAL CONDITIONS OF THE CONSTRUCTION CONTRACT, #C-700 PREPARED BY THE ENGINEERS JOINT CONTRACT DOCUMENTS COMMITTEE (EJCDC), LATEST EDITION. COPIES ARE AVAILABLE AT WWW.NSPE.ORG/EJCDC

2. UNDERGROUND IMPROVEMENTS: THE LOCATION OF EXISTING UNDERGROUND UTILITIES AND IMPROVEMENTS SHOWN ARE ASSUMED BASED ON RESEARCH, UTILITY PLANS PROVIDED BY OTHERS, AND/OR SURFACE EVIDENCE AVAILABLE AND WERE OBTAINED IN A MANNER CONSISTENT WITH THE ORDINARY STANDARD OF PROFESSIONAL CARE AND HAVE NOT BEEN INDEPENDENTLY VERIFIED BY THE OWNER OR THE DESIGN ENGINEER.

3. DIFFERING SUBSURFACE OR PHYSICAL CONDITIONS: IF CONTRACTOR BELIEVES THAT ANY SUBSURFACE OR PHYSICAL CONDITION AT OR CONTIGUOUS TO THE SITE THAT IS UNCOVERED OR REVEALED EITHER: (1) IS OF SUCH A NATURE AS TO ESTABLISH THAT ANY "TECHNICAL DATA" ON WHICH CONTRACTOR RELIED IS MATERIALLY INACCURATE; OR (2) IS OF SUCH A NATURE AS TO REQUIRE A CHANGE IN THE PLANS/ CONTRACT DOCUMENTS; OR (3) DIFFERS MATERIALLY FROM THAT SHOWN OR INDICATED IN THE PLANS/CONTRACT DOCUMENTS; OR (4) IS OF AN UNUSUAL NATURE, AND DIFFERS MATERIALLY FROM CONDITIONS ORDINARILY ENCOUNTERED AND GENERALLY RECOGNIZED AS INHERENT IN WORK OF THE CHARACTER PROVIDED FOR IN THE PLANS/CONTRACT DOCUMENTS; THEN CONTRACTOR SHALL, PROMPTLY AFTER BECOMING AWARE THEREOF AND BEFORE FURTHER DISTURBING THE SUBSURFACE OR PHYSICAL CONDITIONS OR PERFORMING ANY WORK IN CONNECTION THEREWITH (EXCEPT IN AN EMERGENCY), NOTIFY OWNER AND ENGINEER ABOUT SUCH CONDITION. CONTRACTOR SHALL NOT FURTHER DISTURB SUCH CONDITION OR PERFORM ANY WORK IN CONNECTION THEREWITH (EXCEPT AS AFORESAID) UNTIL RECEIPT OF WRITTEN ORDER TO DO SO.

4. UTILITIES: PRIVATE AND PUBLIC UTILITIES SUCH AS ELECTRIC, TELEPHONE, GAS, CABLE, FIBER OPTIC ETC. ARE THE RESPONSIBILITY OF THE RESPECTIVE UTILITY COMPANY. ANY INFORMATION SHOWN BY TCE SHOULD BE CONSIDERED PRELIMINARY (USUALLY TO ASSIST WITH PERMITTING). FINAL DESIGN, CONSTRUCTION AND MAINTENANCE ARE THE RESPONSIBILITY OF RESPECTIVE UTILITY COMPANIES. COMPLIANCE WITH EASEMENTS AND REGULATIONS (STATE AND LOCAL) ARE THE RESPONSIBILITY OF RESPECTIVE UTILITY COMPANY.

5. DIGSAFE: IN ACCORDANCE WITH VERMONT STATE LAW (VSA TITLE 30 CHAPTER 86 AND PSB RULE 3,800) THE CONTRACTOR SHALL BE RESPONSIBLE TO CONTACT DIGSAFE SYSTEMS, INC. "DIGSAFE" AT 1-888-344-7233 AT LEAST 48 HOURS , EXCLUDING SATURDAYS, SUNDAYS, AND LEGAL HOLIDAYS, BUT NOT MORE THAN 30 DAYS BEFORE COMMENCING EXCAVATION ACTIVITIES, EXCEPT IN AN EMERGENCY. THE CONTRACTOR SHALL BE RESPONSIBLE FOR PRE-MARKING THE SITE AND MAINTAINING DESIGNATED MARKINGS. FOR MORE INFORMATION ON DIGSAFE REQUIREMENTS SEE WWW.DIGSAFE.COM.

6. JOBSITE SAFETY: NEITHER THE PROFESSIONAL ACTIVITIES OF TRUDELL CONSULTING ENGINEERS (TCE), NOR THE PRESENCE OF TCE OR ITS EMPLOYEES AND SUB CONSULTANTS AT A CONSTRUCTION SITE, SHALL RELIVE THE GENERAL CONTRACTOR AND ANY OTHER ENTITY OF THEIR OBLIGATIONS, DUTIES AND RESPONSIBILITIES INCLUDING, BUT NOT LIMITED TO, CONSTRUCTION MEANS, METHODS, SEQUENCE, TECHNIQUES OR PROCEDURES NECESSARY FOR PERFORMING, SUPERINTENDING OR COORDINATING ALL PORTIONS OF THE WORK OF CONSTRUCTION IN ACCORDANCE WITH THE CONTRACT DOCUMENTS AND ANY HEALTH OR SAFETY PRECAUTIONS REQUIRED BY ANY REGULATORY AGENCIES. TCE AND ITS PERSONNEL HAVE NO AUTHORITY TO EXERCISE ANY CONTROL OVER ANY CONSTRUCTION CONTRACTOR OR OTHER ENTITY OR THEIR EMPLOYEES IN CONNECTION WITH THEIR WORK OR ANY HEALTH OR SAFETY PRECAUTIONS. THE CLIENT AGREES THAT THE GENERAL CONTRACTOR IS SOLELY RESPONSIBLE FOR JOBSITE SAFETY, AND WARRANTS THAT THIS INTENT SHALL BE MADE EVIDENT IN THE CLIENT'S AGREEMENT WITH THE GENERAL CONTRACTOR. THE CLIENT ALSO AGREES THAT THE CLIENT, TCE AND TCE'S CONSULTANTS SHALL BE INDEMNIFIED AND SHALL BE MADE ADDITIONAL INSURED UNDER THE GENERAL CONTRACTOR'S GENERAL LIABILITY INSURANCE POLICY.

7. CODES AND STANDARDS COMPLIANCE: TCE SHALL EXERCISE USUAL AND CUSTOMARY PROFESSIONAL CARE IN ITS EFFORTS TO COMPLY WITH CODES, STANDARDS, REGULATIONS, AND ORDINANCES IN EFFECT. THE OWNER ACKNOWLEDGES THAT SUCH REQUIREMENTS MAY BE SUBJECT TO VARIOUS AND CONTRADICTORY INTERPRETATIONS. TCE, THEREFORE, WILL MAKE REASONABLE PROFESSIONAL EFFORTS AND JUDGMENT TO INTERPRET APPLICABLE REQUIREMENTS AS THEY APPLY TO THE PROJECT. TCE, HOWEVER, CANNOT AND DOES NOT WARRANT OR GUARANTEE THAT THE PROJECT WILL COMPLY WTH ALL INTERPRETATIONS OF SUCH REQUIREMENTS.

8. CONSTRUCTION OBSERVATION: TCE MAY VISIT THE PROJECT AT APPROPRIATE INTERVALS DURING CONSTRUCTION TO BECOME GENERALLY FAMILIAR WITH THE PROGRESS AND QUALITY OF THE CONTRACTOR'S WORK AND TO DETERMINE IF THE WORK IS PROCEEDING IN GENERAL ACCORDANCE WITH THE CONTRACT DOCUMENTS. THE OWNER HAS NOT RETAINED TCE TO MAKE DETAILED INSPECTIONS OR TO PROVIDE EXHAUSTIVE OR CONTINUOUS PROJECT REVIEW AND OBSERVATION SERVICES. TCE DOES NOT GUARANTEE THE PERFORMANCE OF, AND SHALL NOT HAVE RESPONSIBILITY FOR, THE ACTS OR OMISSIONS OF ANY CONTRACTOR, SUB-CONTRACTOR, SUPPLIER OR ANY OTHER ENTITY FURNISHING MATERIALS OR PERFORMING ANY WORK ON THE PROJECT. TCE SHALL NOT SUPERVISE, DIRECT OR HAVE CONTROL OVER THE CONTRACTOR'S WORK NOR HAVE ANY RESPONSIBILITY FOR THE CONSTRUCTION MEANS, METHODS, TECHNIQUES, SEQUENCES OR PROCEDURES OF THE CONTRACTOR. IF THE OWNER DESIRES MORE EXTENSIVE PROJECT OBSERVATION OR FULL-TIME PROJECT REPRESENTATION, THE OWNER SHALL REQUEST SUCH SERVICES BE PROVIDED BY TCE AS ADDITIONAL SERVICES.

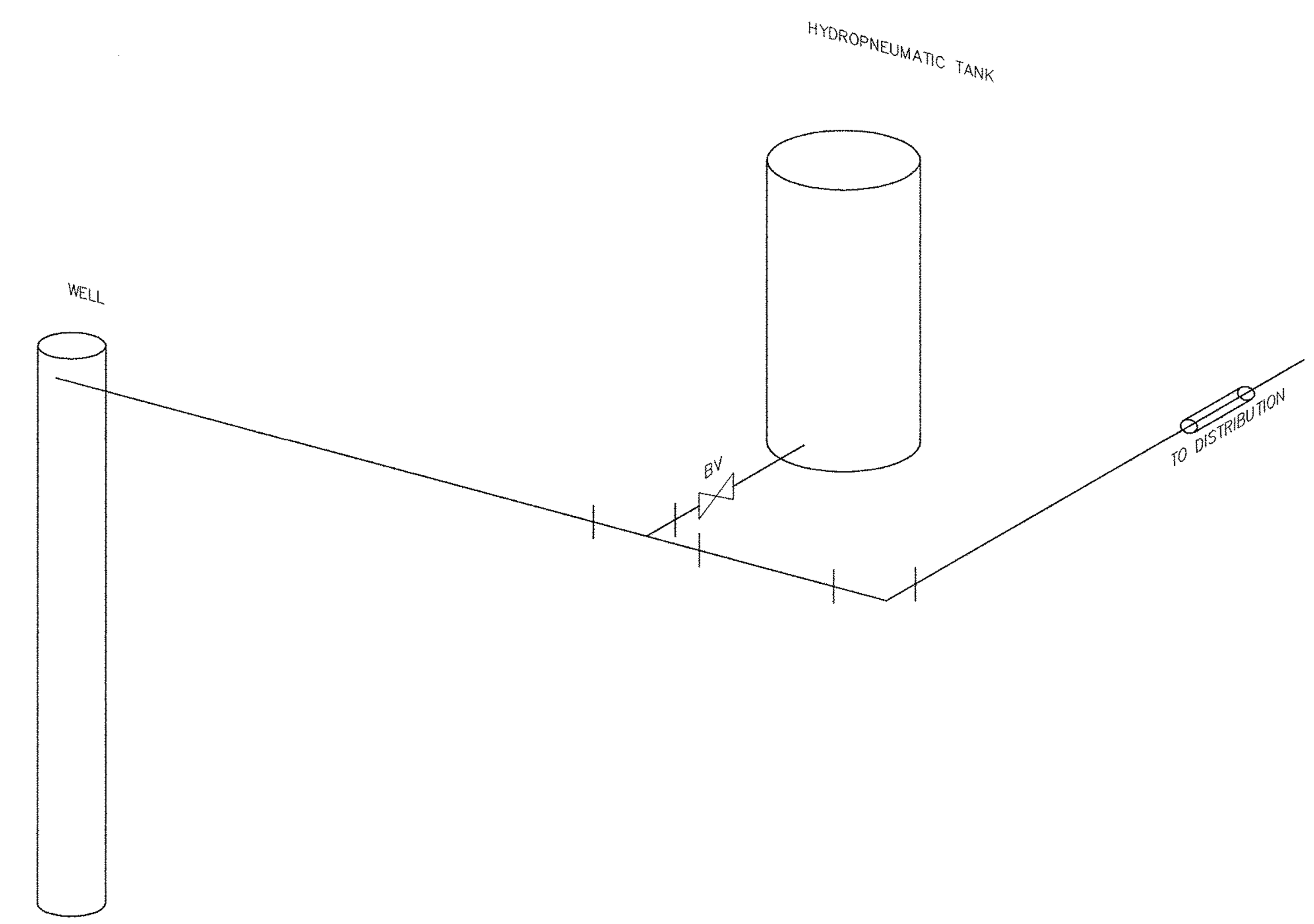

6 WATER WELL AND HYDROPNUEMATIC TANK SCHEMATIC

TESTING WATER MAINS

A. AFTER THE PIPE HAS BEEN LAID AND 7 DAYS AFTER THE CONCRETE THRUST BLOCKS AND ANCHORS HAVE BEEN PLACED, THE WATER MAIN SHALL BE HYDROSTATICALLY TESTED ACCORDING TO THE LATEST EDITION OF THE AWWA SPECIFICATION C-600.

B. CONTRACTOR SHALL SUPPLY ALL NECESSARY APPARATUS TO PERFORM THE HYDROSTATIC TEST.

C. TEST PRESSURE SHALL BE 200 POUNDS PER SQUARE INCH OR 1.5 TIMES THE WORKING PRESSURE MEASURED AT OR NEAR THE HIGH POINT IN THE SYSTEM, WHICHEVER IS GREATER. TEST SHALL BE A MINIMUM OF 2 HOURS IN DURATION. TESTING ALLOWANCE SHALL BE DEFINE AS THE QUANTITY OF MAKEUP WATER THAT MUST BE SUPPLIED INTO THE NEWLY LAID PIPE OR ANY VALVED SECTION THEREOF TO MAINTAIN PRESSURE WITHIN 5 PSI (34.5 kPa) OF THE SPECIFIED TEST PRESSURE AFTER THE PIPE HAS BEEN FILLED WITH WATER AND THE AIR HAS BEEN EXPELLED. TESTING ALLOWANCE SHALL NOT BE MEASURED BY A DROP IN PRESSURE IN A TEST SECTION OVER A PERIOD OF TIME.

D. THE PROJECT ENGINEER AND THE MUNICIPALITY SHALL BE CONTACTED 48 HOURS PRIOR TO TESTING.

E. ALL VALVES SHOULD BE VERIFIED AS BEING OPEN OR CLOSED AS APPROPRIATE FOR THE PORTION OF THE WATER MAIN BEING TESTED.

F. ALLOWABLE LEAKAGE SHALL BE COMPUTED BY THE FORMULA: $L=(S \times D \times \sqrt{P})/133{,}200$ WHERE L IS LEAKAGE IN GALLONS PER HOUR, S IS THE LENGTH OF PIPE TESTED IN FEET, D IS THE NOMINAL DIAMETER OF THE PIPE IN INCHES AND P IS THE AVERAGE TEST PRESSURE IN POUNDS PER SQUARE INCH DURING THE TEST.

G. REPLACE AND RETEST ANY WORK FOUND TO BE DEFECTIVE AT NO EXPENSE TO OWNER.

4 TESTING WATER MAINS

2007 TRUDELL CONSULTING ENGINEERS LAST REVISED 03/05/07 WTR-030S

A. PRIOR TO BEING PUT INTO SERVICE, WATER MAINS SHALL BE DISINFECTED ACCORDING TO THE LATEST EDITION OF AWWA SPECIFICATION C-651. THE TABLET METHOD IN AWWA STANDARD 651 IS NOT ACCEPTABLE.

B. THE NEW LINE SHALL BE FLUSHED AT A VELOCITY OF NOT LESS THAN 2.5 FEET PER SECOND (OPEN 2-1/2 INCH HYDRANT CONNECTION). FLUSH FOR A PERIOD DETERMINED BY THE ENGINEER FOR THE LENGTH OF MAIN TO BE DISINFECTED.

C. CHLORINATION SHALL BE ACCOMPLISHED BY INTRODUCING A HYPOCHLORITE SOLUTION WITH A CONCENTRATION OF GREATER THAN 25 PARTS PER MILLION OF FREE CHLORINE.

D. USING A NOZZLE AT EACH END HYDRANT, CONTROL THE RATE OF FLOW INTO THE NEW MAIN AND PROPORTIONALLY FEED THE HYPOCHLORITE SOLUTION INTO THE MAIN. AFTER THE CHLORINE HAS REACHED ALL POINTS IN THE SYSTEM, CLOSE THE VALVE SUPPLYING WATER FROM THE EXISTING MAIN AND THE END HYDRANTS. MAINTAIN THE HEAVILY CHLORINATED WATER IN THE MAIN FOR 24 HOURS DURING WHICH TIME ALL MAIN LINE VALVES SHOULD BE OPERATED. AFTER 24 HOURS THE MINIMUM CHLORINE RESIDUAL MUST BE AT LEAST 10 PARTS PER MILLION.

E. FLUSH HEAVILY CHLORINATED WATER FROM THE LINE AND REFILL THE LINE FOR SERVICE (USE CHLORINE DIFFUSER). TAKE AND SUBMIT TWO BACTERIOLOGICAL SAMPLES OF THE WATER TO THE STATE OF VERMONT OR A STATE APPROVED TESTING LABORATORY. IF THE RESULTS ARE UNSATISFACTORY, THE DISINFECTION PROCEDURE WILL BE REPEATED UNTIL SATISFACTORY RESULTS ARE OBTAINED.

F. FINISHED WATER STORAGE STRUCTURES SHALL BE DISINFECTED IN ACCORDANCE WITH CURRENT AWWA STANDARD C652. TWO OR MORE SUCCESSIVE SETS OF SAMPLES, TAKEN AT 24 HOUR INTERVALS, SHALL INDICATE MICROBIOLOGICALLY SATISFACTORY WATER BEFORE THE FACILITY IS PLACES INTO OPERATION.

G. DISPOSAL OF HEAVILY CHLORINATED WATER FROM THE TANK & PIPELINE DISINFECTION PROCESS SHALL BE IN ACCORDANCE WITH THE REQUIREMENTS OF THE SECRETARY OF THE ANR.

H. THE DISINFECTION PROCEDURE (AWWA CHLORINATION METHOD 3, SECTION 4.3 C652) WHICH ALLOWS USE OF THE CHLORINATED WATER HELD IN THE STORAGE TANK FOR DISINFECTION PURPOSES REQUIRES SPECIAL CONSIDERATION. WHEN THAT PROCEDURE IS USED, IT IS REQUIRED THAT THE INITIAL HEAVILY CHLORINATED WATER BE PROPERLY DISPOSED IN ORDER TO PREVENT RELEASE OF WATER WHICH MAY CONTAIN VARIOUS CHLORINATED ORGANIC COMPOUNDS INTO THE DISTRIBUTION SYSTEM.

5 DISINFECTION OF WATER SYSTEM

2007 TRUDELL CONSULTING ENGINEERS LAST REVISED 12/10/08 WTR-029S

TRUDELL CONSULTING ENGINEERS (TCE)
478 Blair Park Road
Box 308 Williston, Vermont 05495 (802) 879-6331

USE AND INTERPRETATION OF THE DRAWINGS

1. Unless otherwise noted, these Drawings are intended for preliminary planning, coordination with other disciplines or utilities, and/or approval from the regulatory authorities. They are not intended as construction drawings unless noted as such.

2. Only drawings specifically marked "For Construction" are intended to be used in conjunction with contract documents, specifications, owner/contractor agreements and to be fully coordinated with other disciplines, including but not limited to, the Architect, if applicable. These Drawings shall not be used for construction layout. Contact TCE for any construction surveying services or to obtain electronic data suitable for construction layout.

3. These Drawings are specific to the Project and are not transferable. As instruments of service, these drawings, and copies thereof, furnished by TCE are its exclusive property. Changes to the drawings may only be made by TCE. If errors or omissions are discovered, they shall be brought to the attention of TCE immediately.

4. By use of these drawings for construction of the Project, the Owner represents that they have reviewed, approved, and accepted the drawings and have met with all applicable parties/disciplines to insure these plans are properly coordinated with other aspects of the Project. The Owner and Architect, are responsible for any buildings shown, including an area measured five (5) feet around any building.

5. It is the User's responsibility to ensure this copy contains the most current revisions.

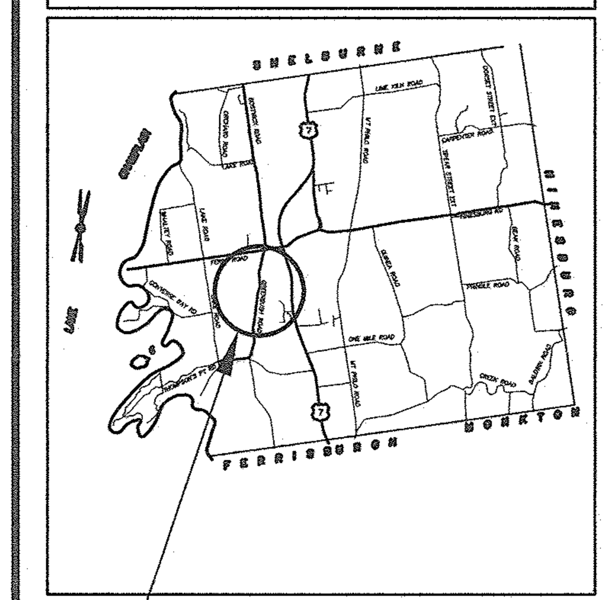

Project Location

No.	Description	Date	By

Revisions

STATE OF VERMONT NATHAN T. HOWELLS NO. 6054[illegible] CIVIL LICENSED PROFESSIONAL ENGINEER

Project Title
GEORGE EWINS

2979 Greenbush Road
Charlotte, Vermont

Sheet Title

Details

Drawing Number : 2011058-71 Extension : 1
Project manager : NTH Drawn : NTH
Date : 4/4/12 Scale : SHOWN
Approved

C8.01