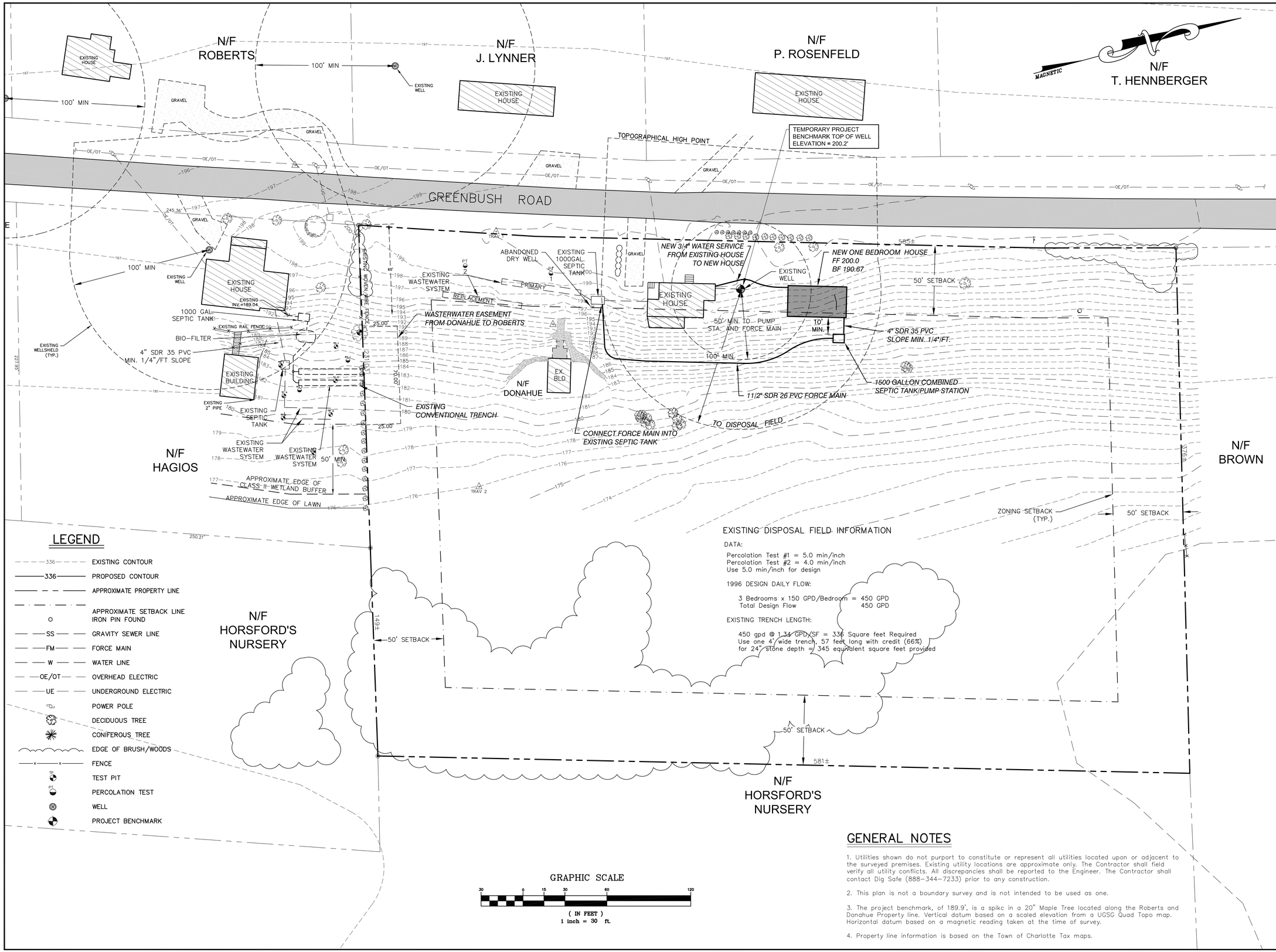

GENERAL NOTES

1. Utilities shown do not purport to constitute or represent all utilities located upon or adjacent to the surveyed premises. Existing utility locations are approximate only. The Contractor shall field verify all utility conflicts. All discrepancies shall be reported to the Engineer. The Contractor shall contact Dig Safe (888-344-7233) prior to any construction.

2. This plan is not a boundary survey and is not intended to be used as one.

3. The project benchmark, of 189.9', is a spikc in a 20" Maple Tree located along the Roberts and Donahue Property line. Vertical datum based on a scaled elevation from a UGSG Quad Topo map. Horizontal datum based on a magnetic reading taken at the time of survey.

4. Property line information is based on the Town of Charlotte Tax maps.

SITE ENGINEER:

CIVIL ENGINEERING ASSOCIATES, INC.
10 MANSFIELD VIEW LANE, SOUTH BURLINGTON, VT 05403
802-864-2323 FAX: 802-864-2271 web: www.cea-vt.com

COPYRIGHT © 2011 - ALL RIGHTS RESERVED

DRAWN: JDL/ACL
CHECKED: DSM
APPROVED: DSM

OWNER:

MATTHEW AND RAINA DONAHUE
1921 GREENBUSH ROAD CHARLOTTE, VERMONT

PROJECT:

DONAHUE SITE PLAN
1921 GREENBUSH ROAD CHARLOTTE, VERMONT

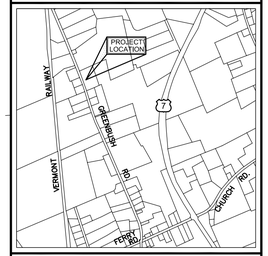

LOCATION MAP
1" = 2000'

DATE	CHECKED	REVISION

OVERALL SITE PLAN

DATE: SEPT., 2011
SCALE: 1" = 30'
PROJ. NO. 11242
DRAWING NUMBER: C1

P:\AutoCADD Projects\2011\11242\1-CADD Files\11242.dwg, 9/29/2011 3:11:37 PM, aloiselle

Precast Pumpstation

1500 Gallon Simplified STEP

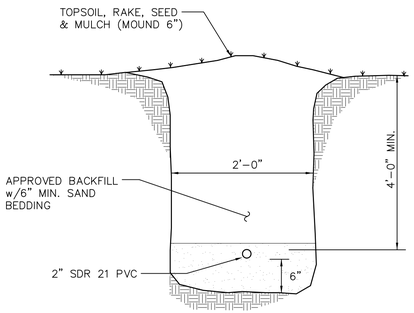

FM TRENCH SECTION

N.T.S.

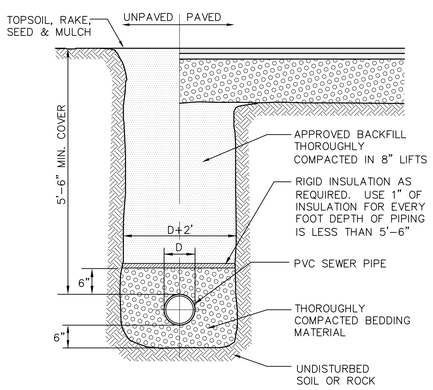

NOTES:

1. Compaction of backfill and bedding shall be a minimum of 90% (95% under roadway surfaces) of maximum dry density determined in the standard proctor test (ASTM D698).
2. Bedding material shall not be placed on frozen subgrade.
3. Approved backfill shall not contain any stones more than 12" in largest dimension (6" in roadways, 2" maximum diameter within 2' of the outside of the pipe), or contain any frozen, wet, or organic material.
4. Trenches shall be completely dewatered prior to placing of pipe bedding material and kept dewatered during installation of pipe and backfill.
5. In trenches with unstable materials, trench bottom shall first be stabilized by placement of filter fabric then crushed stone (3/4" maximum).
6. The sides of trenches 4' or more in depth entered by personnel shall be sheeted or sloped to the angle of repose as defined by O.S.H.A. standards.
7. Bedding material shall consist of crushed stone, gravel or sand with a maximum size of 3/4". Submit a sample to the Engineer for approval.

TYPICAL GRAVITY SEWER TRENCH DETAIL

N.T.S.

Total Weight : 14,720 lbs

Pump Compartment has 133 Gallon / Vertical Foot

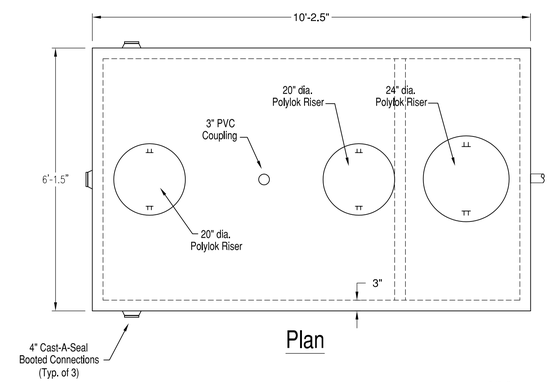

Plan

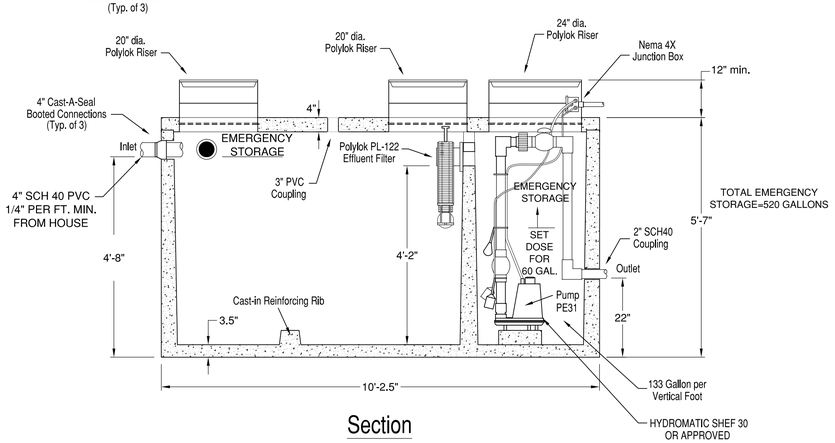

Section

SPECIFICATIONS:

- Concrete Minimum Strength 5000psi @ 28 days
- Steel Reinforcement Grade 60
- 4" Cast-A-Seal Booted Connections
- Top Seam Construction
- Weights Subject to Variation

NOTE:
TANK DETAIL FROM CAMP PRECAST (AS SHOWN)
OR APPROVED EQUAL

COMBINED SEPTIC TANK/PUMP STATION

N.T.S.

MINIMUM ISOLATION DISTANCES

(Contact Engineer for any Clarifications or Conflicts)

	Horizontal Distance (Feet)		
	Leachfield	Septic Tank	Sewer
Drilled Well Serving 1 Home – Up Slope of Disposal Field	100 (Min.)[1]	50	50
Drilled Well Serving 1 Home – Down Slope of Disposal Field	200 (Min.)[1]	50	50
Shallow Well or Spring, Up Slope of Disposal Field	150 (Min.)[1]	75	75
Shallow Well or Spring, Down Slope of Disposal Field	500 (Min.)[1]	75	75
Lakes, Ponds and Impoundment	50	25	25
Rivers, Streams	50	25	10
Drainage Swales, Roadway Ditches	25	–	–
Municipal Water Main	50	50	10
Service Water Lines	25	25	10
Roadways, Driveways, Buildings	10	5	5[3]
Top of embankment or slope > 30%	25	10	–
Property Line	10 (25 Downslope)	10	10
Trees	10	10	10
Replacement Area	10	–	–
Foundation, Footing Drains	35 (75 Downslope)[2]	10	–

1. Isolation distances to well locations may vary due to site conditions – contact Engineer for verification with the Vermont Water Supply Rule Regulations.
2. If a curtain or foundation drain is downslope of the leachfield, the leachfield cannot be closer than 75 feet to the drain. If the drain is upslope of the leachfield, it shall be 35' if possible and 20' minimum.
3. Sewers under roads, driveways or parking lots may require protective conduits or sleeves.

SITE ENGINEER:

CIVIL ENGINEERING ASSOCIATES, INC.
10 MANSFIELD VIEW LANE, SOUTH BURLINGTON, VT 05403
802-864-2323 FAX: 802-864-2271 web: www.cea-vt.com

COPYRIGHT © 2011 – ALL RIGHTS RESERVED

DRAWN: ACL
CHECKED: DSM
APPROVED: DSM

OWNER:

MATTHEW AND RAINA DONAHUE
1921 GREENBUSH ROAD
CHARLOTTE, VERMONT

PROJECT:

DONAHUE SITE PLAN
1921 GREENBUSH ROAD
CHARLOTTE, VERMONT

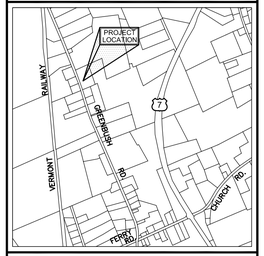

LOCATION MAP
1" = 2000'

DATE	CHECKED	REVISION

WASTEWATER DISPOSAL SYSTEM DETAILS

DATE: SEPT., 2011
SCALE: AS SHOWN
PROJ. NO.: 11242
DRAWING NUMBER: C2

P:\AutoCADD Projects\2011\11242\1-CADD Files\11242.dwg, 9/29/2011 3:18:54 PM, aloiselle